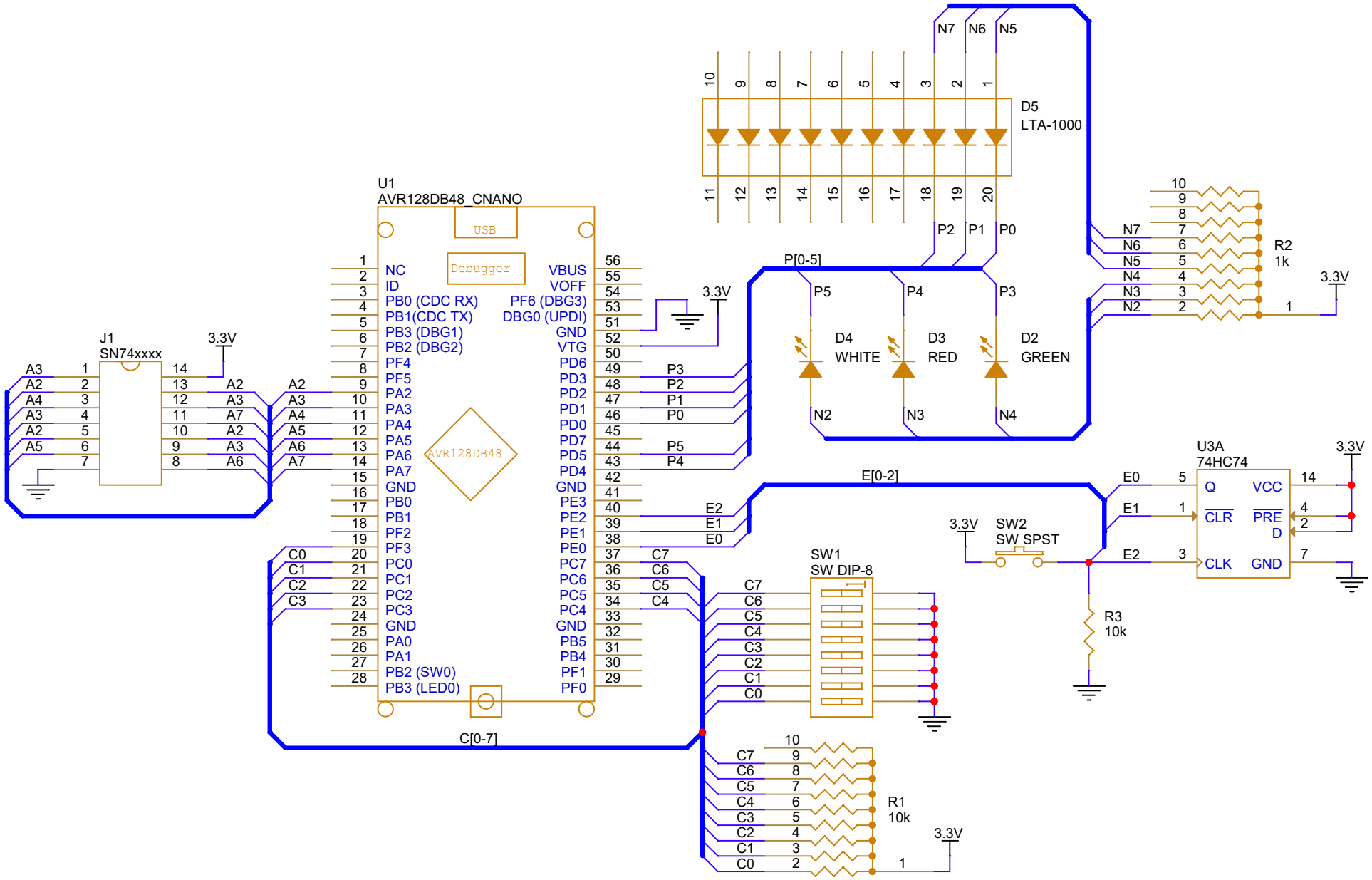


| | | |
|---|---|---|
| Title | Lab 6 Schematic - Device Under Test (DUT) Socket | |
| Size A | Document Number<br>Jason Chen - ESE 280 Section 1 Fall 2022 | Rev 1 |
| Date: Tuesday, October 04, 2022 | Sheet 1 of 1 | |