Smart Energy Meter Using IoT

Chapter 1: Introduction to IoT and Smart Energy Meter

1.1 Overview of Internet of Things (IoT)

The Internet of Things (IoT) refers to the network of physical objects embedded with sensors, software, and other technologies for the purpose of connecting and exchanging data with other devices and systems over the internet. IoT enables real-time monitoring, automation, and control of objects in various domains such as healthcare, agriculture, smart homes, industries, and energy management. By integrating devices with IoT, systems become more intelligent, efficient, and convenient.

Operation Flow:

1. Meter measures power consumption.
2. Data sent to microcontroller.
3. Microcontroller uploads data to the cloud.

1.2 Importance of Smart Energy Metering

Energy metering traditionally involved manual reading of electrical consumption, which is time-consuming and prone to errors. Smart energy meters revolutionize this process by automatically measuring and transmitting energy usage data in real-time through IoT technologies. This enables:

- Remote monitoring
- Better demand management
- Fault detection
- User awareness for energy conservation

Smart meters play a crucial role in modernizing power grids, enabling smart home systems, and supporting sustainable energy usage.

1.3 Project Objective

This project aims to develop a smart energy meter using IoT that:

- Accurately measures voltage and current
- Calculates power consumption
- Displays real-time data locally
- Transmits data to cloud platforms for remote monitoring and analysis

Key goals include:

- Real-time measurement of voltage and current using sensors
- Wireless data communication via Wi-Fi
- Visualization on LCD/OLED displays and IoT cloud platforms (ThingSpeak/Blynk)

Chapter 2: Components and Their Working Principles

2.1 Voltage Sensor: ZMPT101B

ZMPT101B is a highly accurate voltage sensor module specifically designed for measuring AC voltage.

It operates on the principle of electromagnetic induction and provides an isolated output signal proportional to the input voltage.

The sensor converts the high voltage in mains circuits safely to a lower voltage level suitable for microcontroller ADC inputs, allowing precise voltage measurements. The ZMPT101B sensor is designed to **measure AC voltage** with high precision, making it suitable for monitoring the supply voltage in smart energy meter applications.

2.2 Current Sensors: ACS712 and SCT-013

ACS712:

Uses the Hall effect to measure both AC and DC current without direct electrical contact.

Outputs an analog voltage proportional to the measured current, which can be read by analog input pins of microcontrollers.

SCT-013:

A non-invasive current transformer sensor used for AC current measurement.

Clamps around a conductor, inducing a proportional current on its coil which can be converted to a voltage signal for measurement.

Widely used for safe current monitoring without circuit interruption. The **ACS712** and **SCT-013** are current sensors commonly used in IoT-based smart energy meter projects for measuring electrical current. The **ACS712** operates on the Hall effect principle, allowing it to measure both AC and DC currents accurately.

2.3 Display Units: LCD and OLED

LCD (Liquid Crystal Display):

Typically, the 16x2 LCD modules are used for displaying numerical and textual data.

Cost-effective and consumes low power.

OLED (Organic Light Emitting Diode):

Offers better contrast, wider viewing angles, and consumes less power compared to LCDs.

Can display graphical data and is compact in size, making it suitable for smart meters needing advanced display features. The display units, such as **LCD** and **OLED**, are used in a smart energy meter to visually present important information like voltage, current, power consumption, and billing data. The LCD (Liquid Crystal Display), typically a 16x2 or 20x4 module, is cost-effective and easy to interface with microcontrollers, making it suitable for displaying basic numerical and textual data.

2.4 Wi-Fi Module: ESP8266

ESP8266 is a low-cost Wi-Fi microchip with full TCP/IP stack and microcontroller capability. Widely used for IoT projects due to its ease of integration and wireless connectivity.

In this project, ESP8266 connects the energy meter to the internet, enabling real-time data upload to cloud services like Thing Speak and Blynk. The ESP8266 provides Wi-Fi capability to the smart energy meter, enabling it to connect to the internet and transmit energy consumption data to cloud servers or IoT platforms.

The Wi-Fi module ESP8266 is a crucial component in IoT-based smart energy meter systems, enabling wireless connectivity between the device and the internet. It allows the meter to transmit real-time energy consumption data to cloud servers or IoT platforms for remote monitoring and analysis.

2.5 Cloud and App Platforms: ThingSpeak and Blynk

ThingSpeak and Blynk are popular cloud and app platforms used in IoT-based smart energy meter systems to manage and visualize data remotely. ThingSpeak is an open-source IoT analytics platform that collects, stores, and analyzes real-time data from connected devices. It provides tools for data visualization, alerts, and integration with MATLAB for advanced analytics. Blynk, on the other hand, is a user-friendly mobile app platform that allows users to create custom dashboards for monitoring and controlling IoT devices.

Thing Speak:

An IoT analytics platform that allows data collection, processing, and visualization.

Supports MATLAB analytics.

Used to log energy consumption data and generate graphs, alerts, and reports.

Blynk:

A mobile app for IoT that allows users to create customized dashboards for monitoring and controlling IoT devices remotely.

Supports notifications, widgets, and real-time data display, enhancing user interaction with the smart energy meter.

2.6 Power Supply: 5V Regulated

A regulated 5V DC power supply ensures all components receive a stable voltage.

Prevents damage caused by fluctuations and guarantees consistent sensor readings and device operation.

It ensures that all electronic components receive a steady voltage level, preventing malfunctions or damage due to voltage fluctuations. Typically, a voltage regulator like the **LM7805** is used to convert higher input voltages (e.g., 9V or 12V) into a constant 5V DC output. This regulated supply guarantees reliable system performance and enhances the overall efficiency and longevity of the device.

Chapter 3: Detailed Working Principles of Sensors

3.1 ZMPT101B Voltage Sensor

The ZMPT101B voltage sensor is designed to measure AC voltage safely and accurately by stepping down the main voltage to a lower value that can be processed by the microcontroller.

It consists of a high-precision voltage transformer with minimal phase shift characteristics to retain the waveform integrity. The sensor output corresponds to the input AC voltage as a scaled-down analog voltage proportional to the amplitude of the mains voltage.

In the Smart Energy Meter, this sensor continuously monitors the live voltage of the supply circuit. The analog output is read by the ESP8266 ADC pin where it is digitized for further processing such as calculating RMS voltage or power.

The transformer-based isolation also protects the microcontroller from high voltage surges.

- Measures AC voltage with high accuracy, suitable for smart energy meters.
- Compact and easy to integrate into electronic measurement systems.
- Ensures safety by preventing direct contact with high voltage.
- Outputs an analog signal proportional to the input voltage for processing.

3.2 ACS712 and SCT-013 Current Sensors

ACS712:

This sensor integrates a Hall effect circuit that produces an analog voltage output proportional to the current flowing through a conductor connected to its terminals. It can measure both AC and DC currents and provides electrical isolation between the high current circuit and the sensor electronics.

The output voltage baseline is at half of the supply voltage (for example, 2.5V for a 5V supply) when no current flows. The sensitivity depends on the variant used, for example, 185mV per Ampere.

SCT-013:

Being a non-invasive current transformer, this sensor clips around a wire to detect AC current magnetically without electrical connection or direct insertion into the circuit. It outputs a current proportional to the primary current which can be converted into voltage across a burden resistor for ADC reading.

The current readings from these sensors are used alongside voltage readings to compute real-time power consumption.

- Non-invasive current transformer (CT) sensor for AC current measurement.
- Clamps around a conductor without direct electrical contact.
- Provides electrical isolation for safety.

Chapter 4 : ESP8266 Wi-Fi Module &IoT Communication

4.1 ESP8266 Module Overview

ESP8266 is a low-cost Wi-Fi microcontroller module that supports 2.4 GHz 802.11 b/g/n Wi-Fi standards and includes a full TCP/IP stack.

It integrates a Tensilica Xtensa 32-bit LX106 CPU running at 80MHz and supports serial communication with external sensors and peripherals.

In this project, ESP8266 connects the energy meter to a Wi-Fi network enabling it to send measured data to IoT cloud platforms such as ThingSpeak and Blynk. It can also host simple web servers or APIs for remote device control or monitoring.

- A low-cost Wi-Fi module with built-in microcontroller capabilities.
- Enables wireless communication between the smart energy meter and the internet.
- Supports TCP/IP protocol for reliable data transmission to cloud platforms.
- Compact size and low power consumption make it ideal for IoT projects.
- Can process sensor data locally, reducing the need for external microcontrollers.
- Widely supported with extensive community resources and libraries.

4.2 Wi-Fi Connectivity and Data Transmission

The ESP8266 module is programmed via Arduino IDE to connect to a local Wi-Fi router using SSID and password authentication.

Data packets containing sensor readings are formatted into HTTP GET or POS requests and sent periodically to IoT cloud servers, where the data is recorded and visualized.

Wi-Fi connectivity plays a vital role in IoT-based smart energy meters by enabling the device to communicate wirelessly with cloud servers and user applications. Through Wi-Fi, the smart meter can transmit real-time energy consumption data securely and efficiently over the internet. This wireless communication eliminates the need for manual meter reading and allows for continuous monitoring from anywhere. Data transmission typically involves sending measured values such as voltage, current, and power usage to cloud platforms where the information is stored, processed, and visualized.

- Enables wireless communication between the smart energy meter and the internet.
- Transmits real-time energy consumption data to cloud servers or IoT platforms.
- Eliminates the need for manual meter reading and data collection.
- Supports continuous remote monitoring and control from anywhere.
- Ensures secure and reliable data transfer using standard Wi-Fi protocols.

Wi-Fi connectivity is a crucial feature in IoT-based smart energy meters, enabling wireless communication between the meter and cloud servers or user applications. This allows the device to transmit real-time energy consumption data securely and efficiently over the internet, eliminating the need for manual meter reading. Continuous data transmission supports remote monitoring and control from anywhere, providing timely updates for billing, alerts, and energy management.

Chapter 5: IoT Cloud Platforms - ThingSpeak and Blynk

5.1 ThingSpeak Platform

ThingSpeak is an open-source IoT analytics platform that enables users to collect, analyze, and visualize sensor data in real-time.

The data from the smart energy meter is uploaded here in channels. It provides API keys for secure data transfer and graphical widgets for energy monitoring dashboards. ThingSpeak also supports MATLAB code integration for custom data processing.

ThingSpeak is an open-source IoT analytics platform designed for collecting, storing, and visualizing data from connected devices in real time. It allows smart energy meters and other IoT systems to upload sensor data to the cloud, where users can monitor energy consumption, analyze trends, and generate reports.

Key Features of ThingSpeak**:**

- Enables real-time data collection and storage from IoT devices.
- Provides tools for data visualization through customizable charts and dashboards.
- Supports integration with MATLAB for advanced data analysis and modeling.
- Allows setting up alerts and triggers based on sensor data thresholds.

5.2 Blynk App

Blynk is a user-friendly mobile app platform that allows real-time remote monitoring and control of IoT devices.

The smart meter transmits data to Blynk servers, which relay it to user devices such as smartphones or tablets. Blynk provides customizable interfaces with widgets like gauges, graphs, and buttons, enhancing interactions such as switching features and viewing historical data.

Blynk is a user-friendly mobile application platform designed for IoT projects, allowing users to create custom dashboards to monitor and control smart devices remotely. It supports real-time data visualization, device management, and notifications, making it ideal for smart energy meters.

With an easy drag-and-drop interface, Blynk enables quick setup and seamless integration with various hardware platforms like Arduino, ESP8266, and ESP32.

Key Features of Blynk:

- Customizable mobile dashboards for real-time monitoring.
- Supports remote control of connected devices.
- Provides push notifications and alerts.
- Compatible with multiple hardware platforms (Arduino, ESP8266, ESP32, etc.).
- Easy drag-and-drop interface for creating widgets.

Chapter 6: Display Units - LCD vs OLED

6.1 LCD Display

Liquid Crystal Displays are older yet reliable visual units commonly used to display alphanumeric data.

The standard 16x2 LCD can show two lines, each with 16 characters. They operate at 5V and interface with microcontrollers via parallel or I2C communication.

LCDs consume moderate power and have limited viewing angles and contrast.

LCDs operate by controlling liquid crystals to modulate light and display characters or simple graphics. They require low power and can be easily connected to microcontrollers like Arduino or ESP8266 to provide immediate feedback to users without needing internet access.

Key Features of LCD Display:

- Displays numerical and textual data clearly.
- Common sizes include 16x2 and 20x4 characters.
- Low power consumption and simple interfacing.
- Cost-effective and widely available.

6.2 OLED Display

Organic Light Emitting Diode displays are modern alternatives offering better contrast, brightness, and viewing angles while consuming less power.

A common 0.96-inch OLED with resolution 128x64 pixels supports graphical data, icons, and text. OLEDs operate efficiently at 3.3V or 5V and communicate typically via I2C or SPI interfaces, making them suitable for compact IoT devices.

They are also thinner, lighter, and consume less power, making them ideal for compact and energy-efficient designs. OLED displays can show both text and graphics, offering a more flexible and visually appealing interface for users.

Key Features of OLED Display:

- Self-emissive display with high contrast and brightness.
- Wide viewing angles and faster response times.
- Low power consumption suitable for battery-powered devices.
- Supports text and graphical data display.

In smart energy meters, display units are essential for showing real-time data such as voltage, current, power consumption, and billing information. Two common types of displays used are **LCD (Liquid Crystal Display)** and **OLED (Organic Light Emitting Diode) display.**

Chapter 7: Power Supply Considerations

The smart meter components operate predominantly at 5V regulated DC power for stable functioning. Using a regulated power supply is essential as sensors and microcontrollers are sensitive to voltage fluctuations and noise, which can cause inaccurate readings or system resets.

A typical 5V voltage regulator module, such as 7805, or a DC-DC buck converter stepping down from a 12V adapter supply ensures clean and consistent power delivery to:

ESP8266 Module (typically 3.3V regulated supply from onboard regulator) :

The ESP8266 module typically operates on a 3.3V regulated power supply, which is often provided by an onboard voltage regulator. This regulator converts higher input voltages (such as 5V from the main power source) down to a stable 3.3V required for the module's internal circuitry. Supplying the correct voltage is crucial because the ESP8266 is not 5V tolerant; applying higher voltages directly can damage the module.

Voltage and Current Sensors :

Voltage and current sensors are essential components in a smart energy meter for accurately measuring electrical parameters. Voltage sensors like the ZMPT101B detect the AC supply voltage, providing a safe, isolated analog signal for processing.

Display Module :

A display module in a smart energy meter is an electronic component used to visually present important data such as voltage, current, power consumption, and billing information. It serves as the primary interface between the device and the user, providing real-time feedback directly on the meter. Display modules can be based on different technologies, including LCD, OLED, or TFT screens, depending on the application requirements for clarity, power consumption, and graphical capabilities.

Key Characteristics:

- Presents real-time energy parameters to users.
- Interfaces with microcontrollers via parallel or serial communication protocols.
- Available in various sizes and technologies (LCD, OLED, TFT).
- Helps in quick diagnosis and monitoring without the need for external devices.
- Enhances user experience with clear and responsive visuals.

Microcontroller input pins and peripherals :

Microcontrollers in smart energy meters use various input pins and peripherals to interface with sensors, communication modules, and displays. Analog input pins (ADC) are used to read sensor outputs like voltage and current signals, which are typically analog voltages proportional to the measured electrical parameters.

Additionally, overcurrent protection and decoupling capacitors stabilize voltage spikes and protect components.

Chapter 8: System Design and Hardware Architecture

8.1 Overall System Design

The smart energy meter system integrates sensing, processing, communication, display, and power supply subsystems into a cohesive IoT-enabled device.

The core design objectives focus on accurate measurement, real-time display, wireless connectivity, and cloud data logging.

Subsystems include:

Sensing Unit: Includes ZMPT101B voltage sensor and ACS712/SCT-013 current sensor for measuring electrical parameters. The processing unit uses the ESP8266 Wi-Fi module with a built-in microcontroller, which acts as the brain of the system by computing power consumption and managing data flow. The display unit consists of LCD or OLED screens that show live voltage, current, and calculated power values locally. The communication unit handles Wi-Fi connectivity and transmits data to IoT cloud services like ThingSpeak and Blynk. Finally, the power supply subsystem provides a regulated 5V supply to power all components, ensuring stable and noise-free operation.

Processing Unit: ESP8266 Wi-Fi module with a built-in microcontroller acts as the brain, computing power consumption and managing data flow.

Display Unit: LCD or OLED displays show live voltage, current, and calculated power values locally.

Communication Unit: Handles Wi-Fi connectivity and transmits data to IoT cloud services like ThingSpeak and Blynk.

Power Supply: A regulated 5V supply powers all components, ensuring stable, noise-free operation.

8.2 Hardware Architecture

The hardware architecture breaks down into the following modules:

Voltage Measurement: ZMPT101B steps down mains voltage and outputs a proportional analog voltage to the ESP8266 ADC input.

Current Measurement: ACS712 provides an analog voltage representative of current flow; alternatively, SCT-013 transformer clips around the wire for zero-intervention sensing.

Microcontroller: ESP8266 reads sensor values, processes data to calculate real-time power ($P = V \times I$), and sends it over Wi-Fi.

Display: Displays updated readings via SPI or I2C communication protocol.

Power Circuit: Includes a regulated 5V source providing power to sensors, ESP8266, and display.

Communication Interface: Wi-Fi transmits data packets formatted preferably in JSON or HTTP GET requests to cloud platforms.

BLOCK DIAGRAM

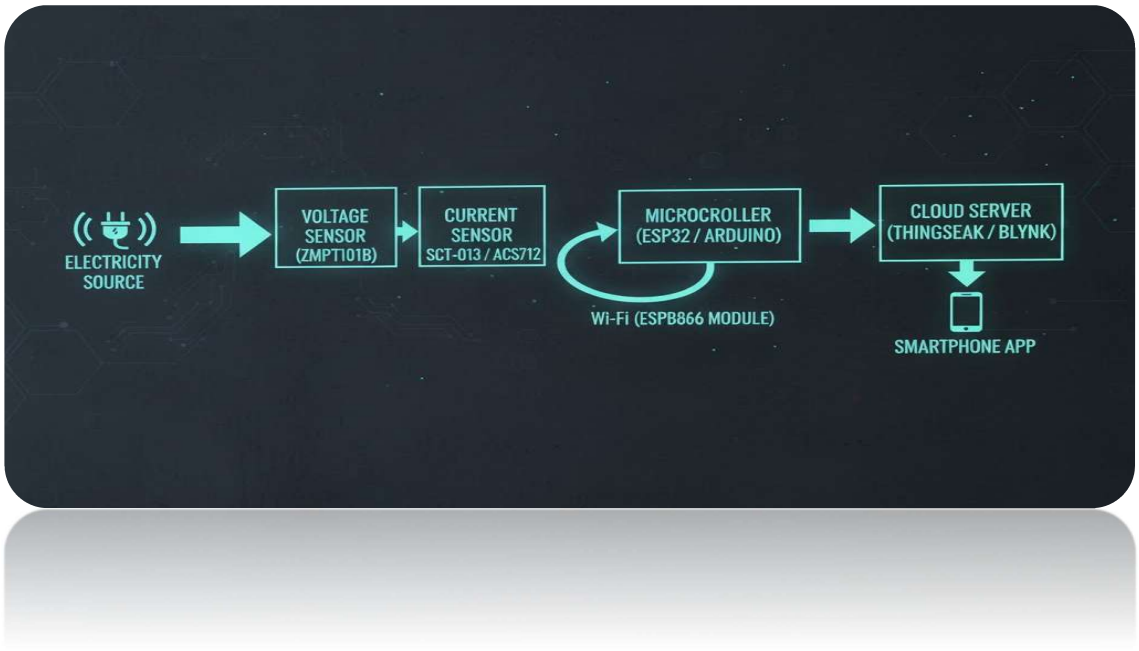

A block diagram visually represents the main components and their interconnections within the smart energy meter system. It simplifies understanding by showing how each subsystem interacts.

The typical block diagram includes the following modules:

- **Sensing Unit:** Consists of voltage and current sensors (such as ZMPT101B and ACS712/SCT-013) that measure electrical parameters from the power source.
- **Processing Unit:** Usually an ESP8266 microcontroller that receives sensor signals, processes the data, calculates power consumption, and manages communication.
- **Display Unit:** LCD or OLED screens that provide a local visual output of voltage, current, and power readings.
- **Communication Unit:** Handles Wi-Fi connectivity to transmit data to cloud platforms like ThingSpeak or Blynk for remote monitoring and control.
- **Power Supply:** Provides regulated power (typically 5V) to all components ensuring stable and noise-free operation.

Each block works together to measure, process, display, and transmit energy consumption data efficiently, enabling an IoT-enabled smart energy meter.

Chapter 9: Circuit Diagram and Connections

9.1 Circuit Description

The circuit diagram connects the voltage sensor (ZMPT101B) and current sensor (ACS712) outputs to the ESP8266's analog input pins. The microcontroller powers the display (LCD or OLED) via I2C or SPI communication. A regulated 5V supply powers all components with a common ground to ensure stable operation. Filters and voltage dividers are used to protect inputs and reduce noise. The ESP8266 also manages Wi-Fi communication to send data to cloud platforms.

CIRCIUT DIAGRAM OF SMART ENERGY METER USING IOT

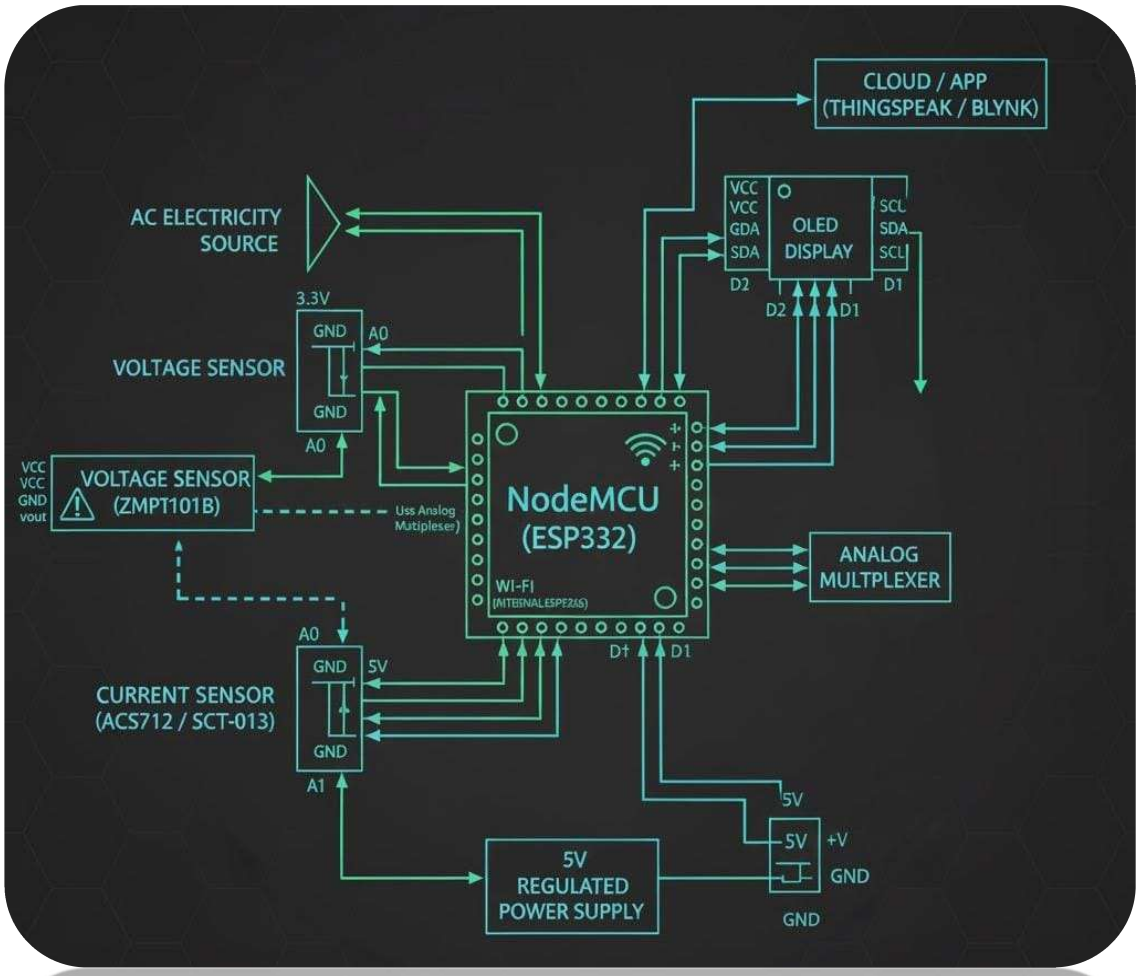

- ZMPT101B: Voltage sensor module
- ACS712 / SCT-013: Current sensor modules
- ESP8266: Wi-Fi enabled microcontroller
- LCD/OLED: Display module for showing readings
- 5V Regulator: Provides stable 5V power supply
- Voltage Divider: Scales down voltage for safe ADC input
- Capacitors: Filter noise from sensor signals
- Common Ground: Shared ground reference for all components
- I2C / SPI Lines: Communication lines between ESP8266 and display
- Wi-Fi Antenna: For wireless data transmission (built-in or external)

Connect ZMPT101B output to the ADC pin of ESP8266 through a voltage divider circuit if required to ensure safe voltage levels.

Connect ACS712 sensor output directly to another ADC pin of ESP8266.

Connect the ESP8266 module power and ground to the regulated 5V supply and common ground.

Connect LCD/OLED display to ESP8266 via I2C (SDA, SCL pins) or SPI pins as per module specifications.

Ensure sensor grounds, ESP ground, and power supply ground are common to avoid ground loops.

Add capacitors and filters to sensor outputs to reduce noise and improve ADC reading stability.

The circuit diagram of the smart energy meter integrates all key components to enable accurate measurement and data transmission. The output from the ZMPT101B voltage sensor is connected to the analog-to-digital converter (ADC) pin of the ESP8266 microcontroller through a voltage divider circuit to ensure the voltage level is within safe limits. Similarly, the ACS712 current sensor's output is connected directly to another ADC pin of the ESP8266 to read current values. The microcontroller is powered by a regulated 5V supply, with all grounds connected common to prevent noise and ground loops. The LCD or OLED display module interfaces with the ESP8266 via I2C or SPI communication protocols, allowing real-time display of voltage, current, and power readings. Additional capacitors and filters are placed near sensor outputs to minimize electrical noise and stabilize analog signals, ensuring accurate ADC readings. The ESP8266 module also handles Wi-Fi communication, sending data packets formatted in JSON or HTTP GET requests to IoT cloud platforms like ThingSpeak or Blynk, enabling remote monitoring and data logging.

Chapter 10: Software Programming and Logic Flow

10.1 Sensor Data Acquisition

The ESP8266 microcontroller reads analog voltage and current values continuously at fixed intervals, for example, every 1 second.

The ADC values are converted to real electrical quantities using calibration constants and formulas:

Voltage Measurement: $V_measured = ADC_voltage \times Calibration_voltage$

Current Measurement: $I_measured = ADC_current \times Calibration_current$

10.2 Power Calculations

Power calculation is a fundamental function in a smart energy meter to determine the electrical energy consumption. It involves measuring the instantaneous voltage and current values from the sensors and computing their product to get the real-time power usage.

Instantaneous power consumption is calculated as

$P = V_measured \times I_measured$

This power data can be averaged over time for energy consumption measurement.

10.3 Display and Cloud Data Transmission

The real-time values of voltage, current, and power are displayed on the LCD or OLED screen.

The ESP8266 formats the data and sends it as HTTP GET or POST requests to ThingSpeak or via Blynk API at regular intervals.

The program includes error handling for connectivity drops and sensor read failures, with retry logic.

10.4 IoT Cloud Integration

ThingSpeak channel keys and Blynk authentication tokens are stored securely in the program.

Data packets include timestamps and multiple sensor readings.

The platforms allow historical data visualization, alerts, and remote control if integrated.

IoT cloud integration enables the smart energy meter to send real-time data to cloud platforms like ThingSpeak and Blynk for remote monitoring and analysis. The ESP8266 microcontroller securely stores channel keys and authentication tokens to authenticate data transmission. Data packets typically include timestamps along with multiple sensor readings such as voltage, current, and power consumption. These cloud platforms offer features like historical data visualization, alerts based on thresholds, and remote control options. Integrating with IoT clouds allows users and utility providers to access energy usage information anytime and anywhere, facilitating better energy management and decision-making