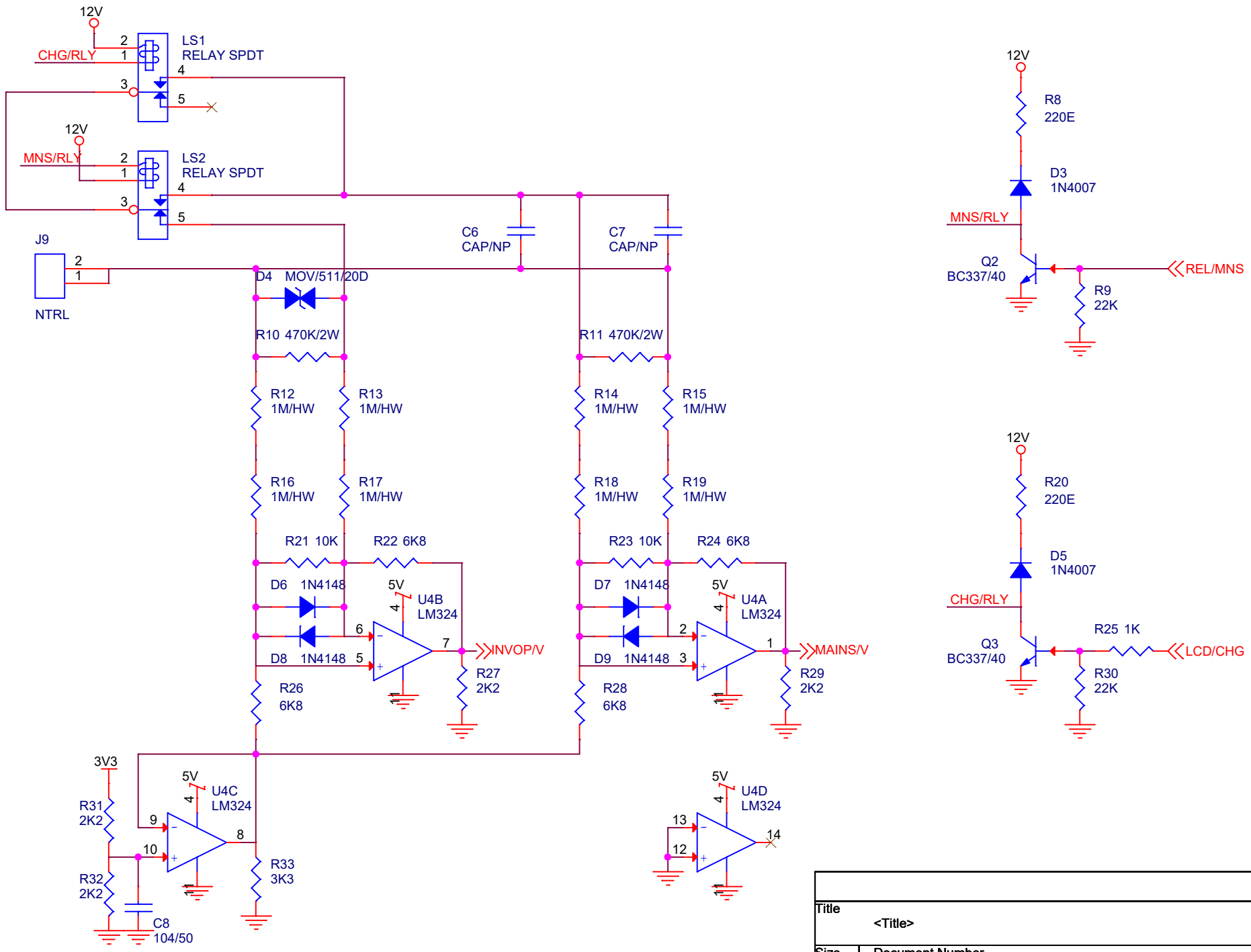

Title <Title>		
Size A	Document Number <Doc>	Rev <RevCode>
Date: Saturday, December 26, 2020	Sheet 2 of 3	