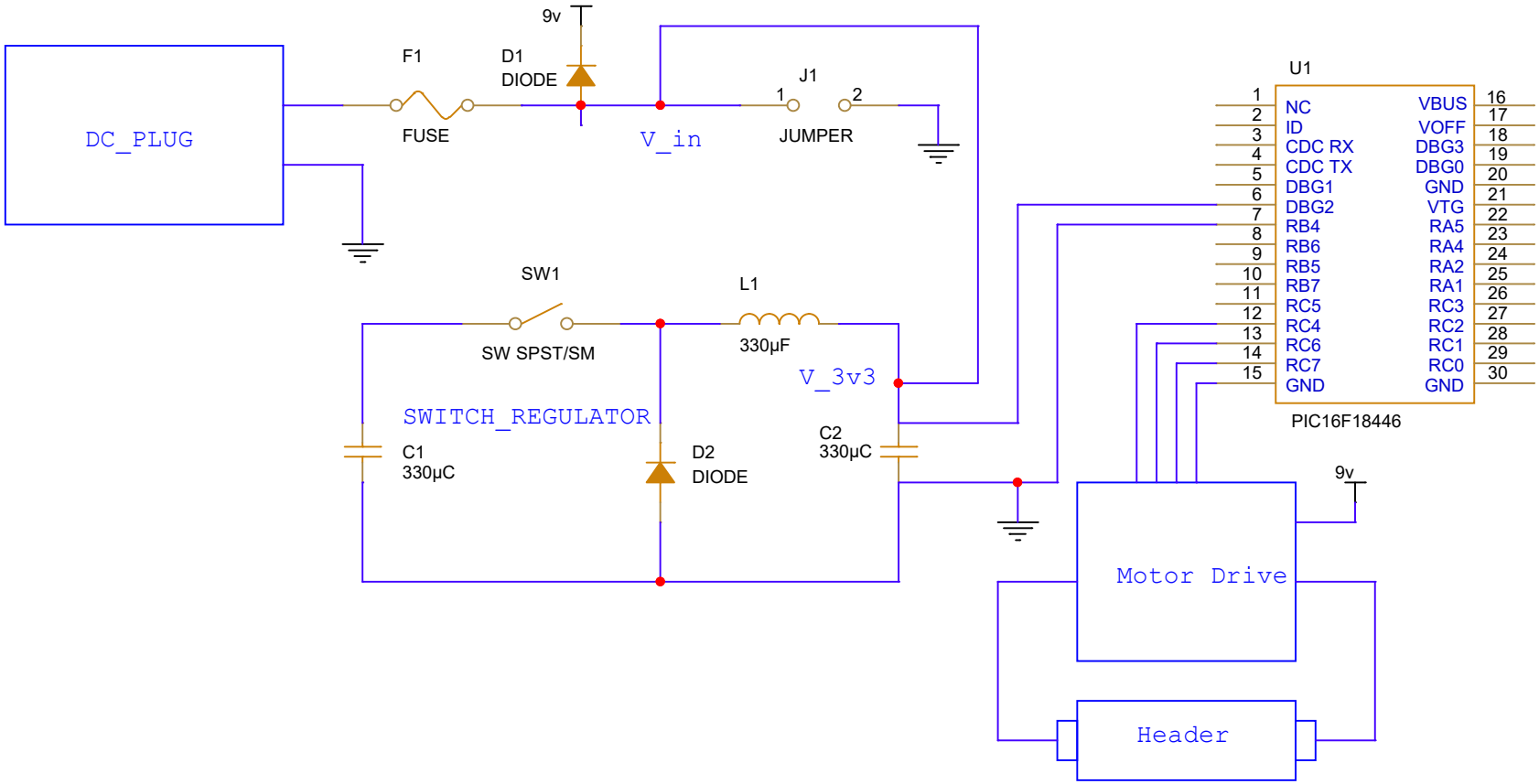


| | | |
|---|---|---|
| Title | <Title> | |
| Size A | Document Number <Doc> | Rev <RevCo |
| Date: Friday, February 21, 2025 | Sheet 1 of 1 | |