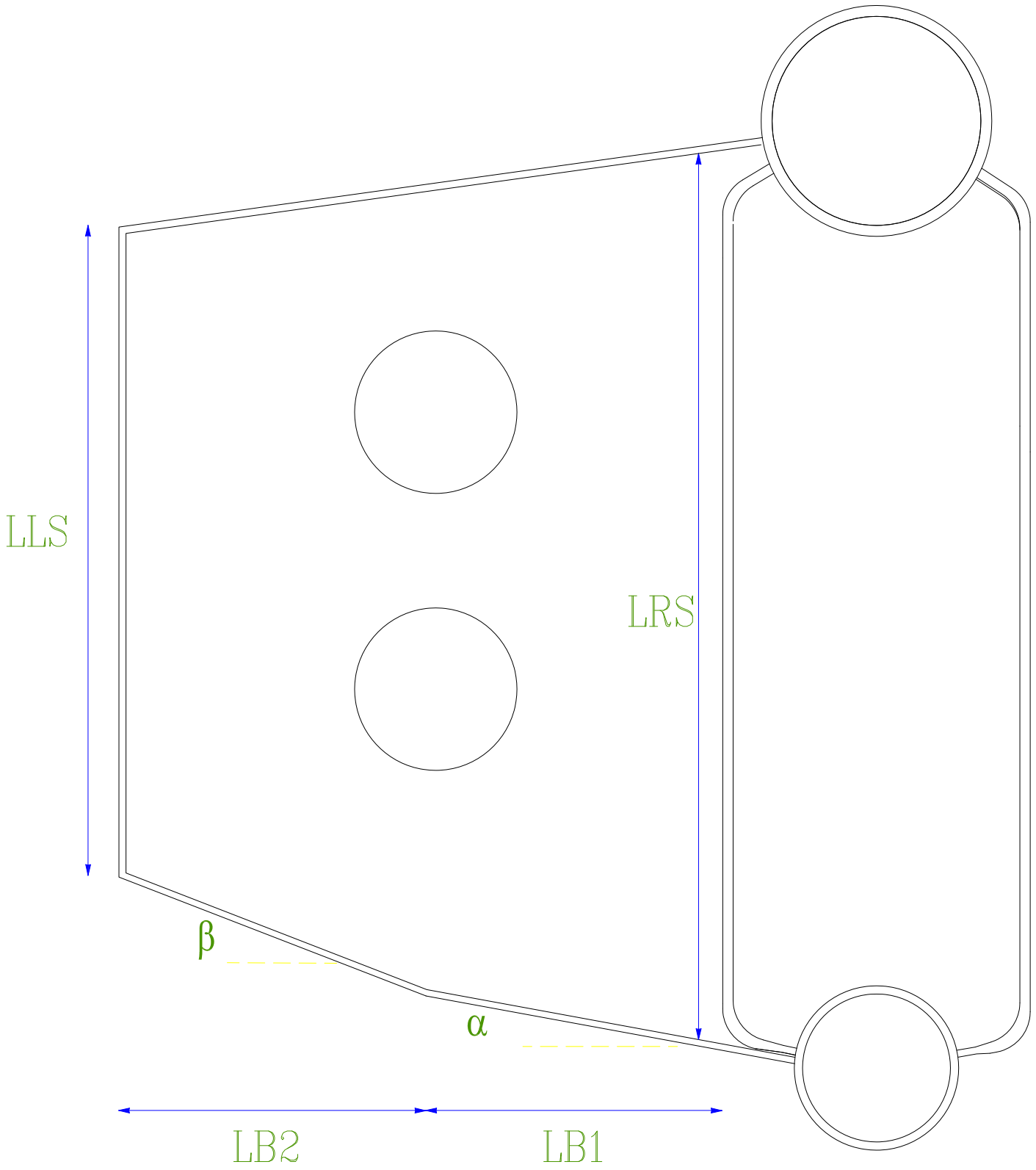
LLS
LRS
β
α
LB2
LB1

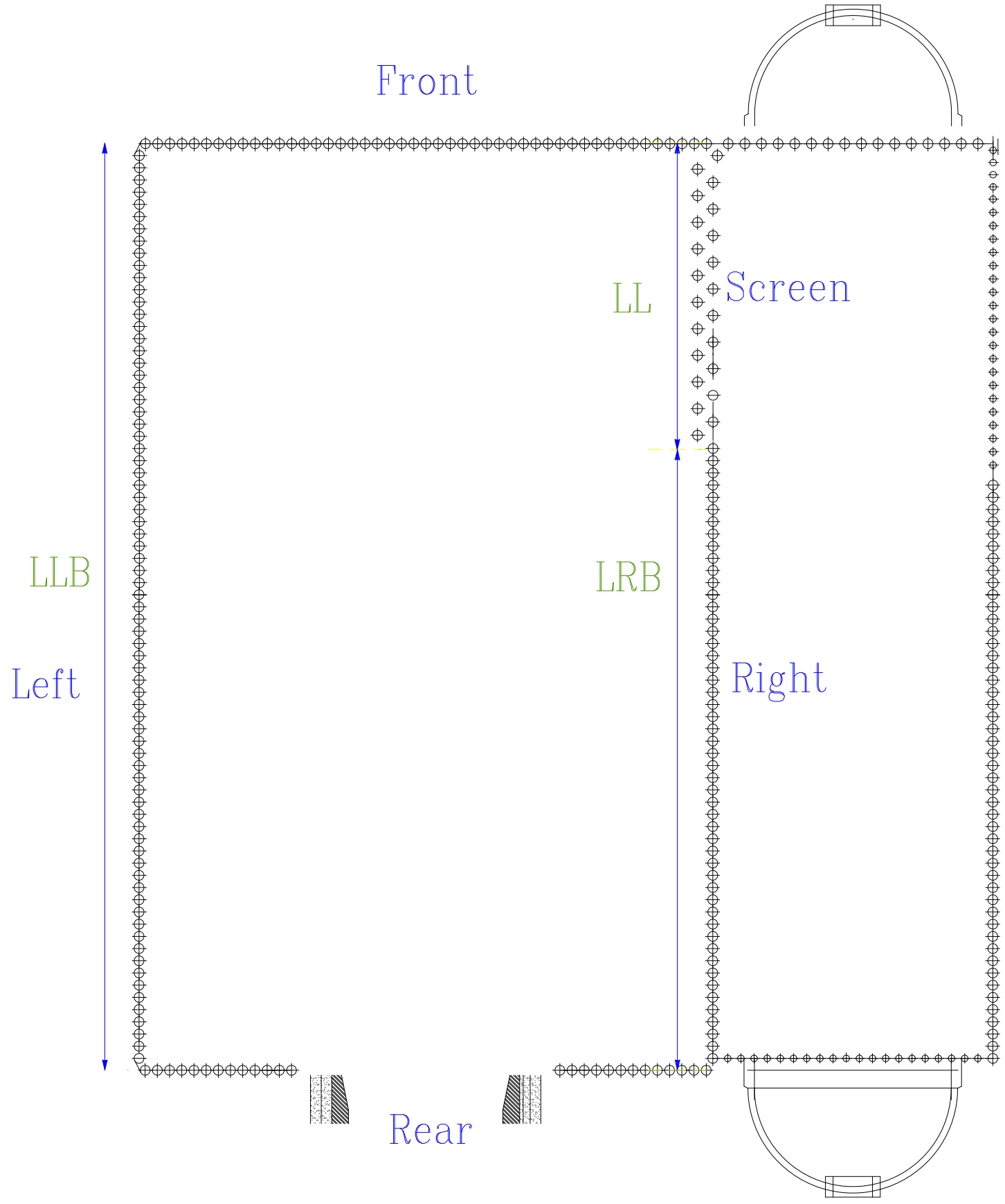
Front
LL
Screen
LLB
LRB
Left
Right
Rear