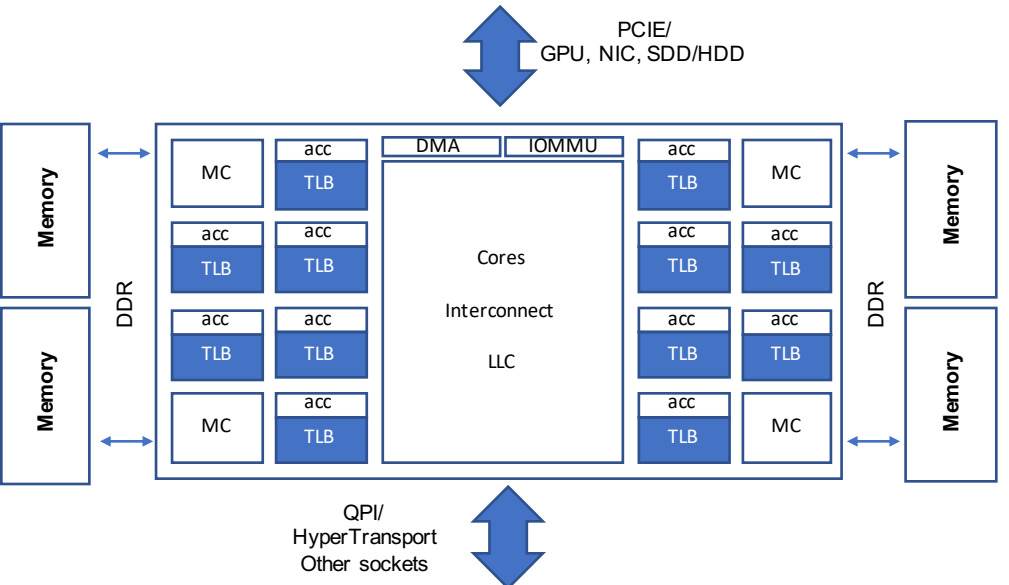
PCIE/
GPU, NIC, SDD/HDD
Memory
Memory
DDR
MC
acc
TLB
DMA
IOMMU
Cores
Interconnect
LLC
DDR
Memory
Memory
QPI/
HyperTransport
Other sockets

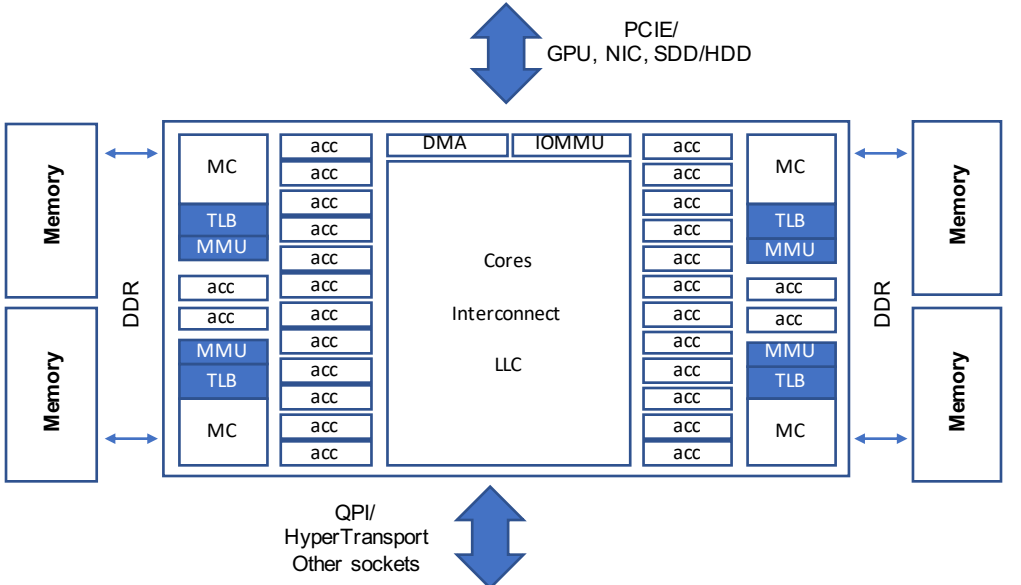
PCIE/
GPU, NIC, SDD/HDD
Memory
Memory
DDR
MC
TLB
MMU
acc
DMA
IOMMU
Cores
Interconnect
LLC
DDR
Memory
Memory
QPI/
HyperTransport
Other sockets