Digital Logic Design Project Report

CECN281 (E)

Rawnaa Nasser Aljohani	2510449
Jawan Faiz Alorabi	2511242
Jana Abdullah Alzahrani	2511182
Reema Audah Alfaidi	2511150

Digital Comparator and Symbol Display System

Truth table link:

https://docs.google.com/spreadsheets/d/1-SCzrM6-yIaWxKLYDBZqEkWk1QbDCzu-A63g6lX0ktg/edit?usp=sharing

7 segment display truth table:

x is (A=B), y is (A>B) , z is (A<B)

x	y	z	a	b	c	d	e	f	g
0	0	0	X	X	X	X	X	X	X
0	0	1	1	0	0	0	0	1	0
0	1	0	0	1	0	0	0	0	1
0	1	1	X	X	X	X	X	X	X
1	0	0	0	0	1	0	1	0	0
1	0	1	X	X	X	X	X	X	X
1	1	0	X	X	X	X	X	X	X
1	1	1	X	X	X	X	X	X	X

7 segment display equations(output):

a=f= x'y'z

b=g= x'yz'

c=e= xy'z'

d=0

Logical Circuit Diagram:

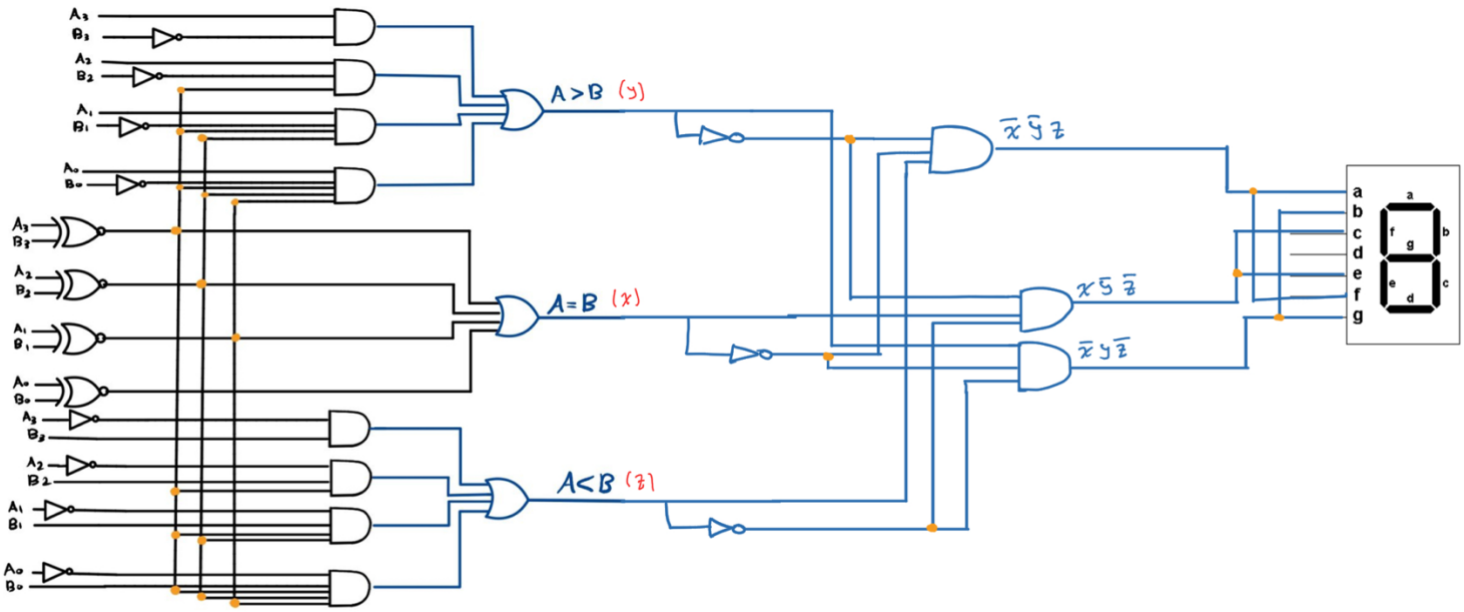

Equations:

- **A=B**

  $=(A_3B_3+A_3'B_3')\ (A_2B_2+A_2'B_2')\ (A_1B_1+A_1'B_1')\ (A_0B_0+A_0'B_0')$

  $=(A_3 \text{ XNOR } B_3)\ (A_2 \text{ XNOR } B_2)\ (A_1 \text{ XNOR } B_1)\ (A_0 \text{ XNOR } B_0)$

- **A>B**

$= A_3B_3' + A_3B_3 A_2B_2' + A_3'B_3' A_2 B_2'+ A_3B_3 A_2B_2 A_1 B_1'+ A_3B_3 A_2'B_2' A_1 B_1'+ A_3'B_3' A_2B_2 A_1 B_1'+ A_3'B_3' A_2'B_2' A_1 B_1'+ A_3B_3 A_2B_2 A_1 B_1 A_0 B_0'+ A_3B_3 A_2B_2 A_1'B_1' A_0 B_0'+ A_3B_3 A_2'B_2' A_1 B_1 A_0 B_0'+ A_3B_3 A_2'B_2' A_1'B_1' A_0 B_0'+ A_3'B_3' A_2B_2 A_1 B_1 A_0 B_0'+ A_3'B_3' A_2B_2 A_1'B_1' A_0 B_0'+ A_3'B_3' A_2'B_2' A_1 B_1A_0 B_0'+ A_3'B_3' A_2'B_2' A_1'B_1' A_0 B_0'$

$= A_3B_3' + A_2 B_2'(A_3B_3+A_3'B_3')+ A_1 B_1'(A_3B_3 A_2B_2 + A_3B_3 A_2'B_2'+ A_3'B_3' A_2B_2 + A_3'B_3' A_2'B_2')+ A_0 B_0'(A_3B_3 A_2B_2 A_1 B_1 + A_3B_3 A_2B_2 A_1'B_1'+ A_3B_3 A_2'B_2' A_1 B_1 + A_3B_3 A_2'B_2' A_1'B_1'+ A_3'B_3' A_2B_2 A_1 B_1+ A_3'B_3' A_2B_2 A_1'B_1' + A_3'B_3' A_2'B_2' A_1 B_1+ A_3'B_3' A_2'B_2' A_1'B_1')$

$= A_3B_3' + A_2 B_2'(A_3B_3+A_3'B_3')+ A_1 B_1'(A_3B_3 (A_2B_2 + A_2'B_2')+ A_3'B_3' (A_2B_2 + A_2'B_2'))+ A_0 B_0'(A_3B_3 A_2B_2 (A_1 B_1 + A_1'B_1')+ A_3B_3 A_2'B_2'(A_1 B_1 + A_1'B_1')+ A_3'B_3' A_2B_2 (A_1 B_1+ A_1'B_1') + A_3'B_3' A_2'B_2' (A_1 B_1+ A_1'B_1'))$

$= A_3B_3' + A_2 B_2'(A_3B_3+A_3'B_3')+ A_1 B_1'(A_3B_3 + A_3'B_3')(A_2B_2 + A_2'B_2')+ A_0 B_0'((A_1 B_1 + A_1'B_1')(A_3B_3 A_2B_2 + A_3B_3 A_2'B_2'+ A_3'B_3' A_2B_2 + A_3'B_3' A_2'B_2'))$

$= A_3B_3' + A_2 B_2'(A_3B_3+A_3'B_3')+ A_1 B_1'(A_3B_3 + A_3'B_3')(A_2B_2 + A_2'B_2')+ A_0 B_0'((A_1 B_1 + A_1'B_1')(A_3B_3 (A_2B_2 + A_2'B_2')+ A_3'B_3' (A_2B_2 + A_2'B_2'))$

$= A_3B_3' + A_2 B_2'(A_3B_3+A_3'B_3')+ A_1 B_1'(A_3B_3 + A_3'B_3')(A_2B_2 + A_2'B_2'))+ A_0 B_0'(A_1 B_1 + A_1'B_1') (A_2B_2 + A_2'B_2')(A_3B_3 +A_3'B_3')$

$= A_3B_3' + A_2 B_2' (A_3 \text{ XNOR } B_3) + A_1 B_1'(A_3 \text{ XNOR } B_3) (A_2 \text{ XNOR } B_2)+ A_0 B_0' (A_1 \text{ XNOR } B_1) (A_2 \text{ XNOR } B_2) (A_3 \text{ XNOR } B_3)$

- **A<B**

$= A_3'B_3 + A_3B_3 A_2'B_2 + A_3'B_3' A_2'B_2 + A_3B_3 A_2B_2 A_1'B_1 + A_3B_3 A_2'B_2' A_1'B_1 + A_3'B_3' A_2B_2 A_1'B_1 + A_3'B_3' A_2'B_2' A_1'B_1 + A_3B_3 A_2B_2 A_1 B_1 A_0'B_0 + A_3B_3 A_2B_2 A_1'B_1' A_0'B_0 + A_3B_3 A_2'B_2' A_1 B_1 A_0'B_0 + A_3B_3 A_2'B_2' A_1'B_1' A_0'B_0 + A_3'B_3' A_2B_2 A_1 B_1 A_0'B_0 + A_3'B_3' A_2B_2 A_1'B_1' A_0'B_0 + A_3'B_3' A_2'B_2' A_1 B_1 A_0'B_0 + A_3'B_3' A_2'B_2' A_1'B_1' A_0'B_0$

$= A_3'B_3 + A_2'B_2 (A_3B_3 + A_3'B_3') + A_1'B_1 (A_3B_3 A_2B_2 + A_3B_3 A_2'B_2' + A_3'B_3' A_2B_2 + A_3'B_3' A_2'B_2') + A_0'B_0 (A_3B_3 A_2B_2 A_1 B_1 + A_3B_3 A_2B_2 A_1'B_1' + A_3B_3 A_2'B_2' A_1 B_1 + A_3B_3 A_2'B_2' A_1'B_1' + A_3'B_3' A_2B_2 A_1 B_1 + A_3'B_3' A_2B_2 A_1'B_1' + A_3'B_3' A_2'B_2' A_1 B_1 + A_3'B_3' A_2'B_2' A_1'B_1')$

$= A_3'B_3 + A_2'B_2 (A_3B_3 + A_3'B_3') + A_1'B_1 (A_3B_3 (A_2B_2 + A_2'B_2') + A_3'B_3' (A_2B_2 + A_2'B_2')) + A_0'B_0 (A_3B_3 A_2B_2 (A_1 B_1 + A_1'B_1') + A_3B_3 A_2'B_2' (A_1 B_1 + A_1'B_1') + A_3'B_3' A_2B_2 (A_1 B_1 + A_1'B_1') + A_3'B_3' A_2'B_2' (A_1 B_1 + A_1'B_1'))$

$= A_3'B_3 + A_2'B_2 (A_3B_3 + A_3'B_3') + A_1'B_1 (A_3B_3 + A_3'B_3')(A_2B_2 + A_2'B_2') + A_0'B_0 ((A_1 B_1 + A_1'B_1')(A_3B_3 A_2B_2 + A_3B_3 A_2'B_2' + A_3'B_3' A_2B_2 + A_3'B_3' A_2'B_2'))$

$= A_3'B_3 + A_2'B_2 (A_3B_3 + A_3'B_3') + A_1'B_1 (A_3B_3 + A_3'B_3')(A_2B_2 + A_2'B_2') + A_0'B_0 ((A_1 B_1 + A_1'B_1')(A_3B_3 (A_2B_2 + A_2'B_2') + A_3'B_3' (A_2B_2 + A_2'B_2'))$

$= A_3'B_3 + A_2'B_2 (A_3B_3 + A_3'B_3') + A_1'B_1 (A_3B_3 + A_3'B_3')(A_2B_2 + A_2'B_2') + A_0'B_0 (A_1 B_1 + A_1'B_1') (A_2B_2 + A_2'B_2')(A_3B_3 + A_3'B_3')$

$= A_3'B_3 + A_2'B_2 (A_3 \text{ XNOR } B_3) + A_1'B_1 (A_3 \text{ XNOR } B_3) (A_2 \text{ XNOR } B_2) + A_0'B_0 (A_1 \text{ XNOR } B_1) (A_2 \text{ XNOR } B_2) (A_3 \text{ XNOR } B_3)$

Equations Conclusion:

- **A=B**

  $=(A_3 \text{ XNOR } B_3)\ (A_2 \text{ XNOR } B_2)\ (A_1 \text{ XNOR } B_1)\ (A_0 \text{ XNOR } B_0)$

- **A>B**

  $=A_3B_3' + A_2 B_2'\ (A_3 \text{ XNOR } B_3) + A_1 B_1'(A_3 \text{ XNOR } B_3)\ (A_2 \text{ XNOR } B_2) + A_0 B_0'\ (A_1 \text{ XNOR } B_1)\ (A_2 \text{ XNOR } B_2)\ (A_3 \text{ XNOR } B_3)$

- **A<B**

  $=A_3'B_3 + A_2'B_2\ (A_3 \text{ XNOR } B_3) + A_1'B_1\ (A_3 \text{ XNOR } B_3)\ (A_2 \text{ XNOR } B_2) + A_0'B_0\ (A_1 \text{ XNOR } B_1)\ (A_2 \text{ XNOR } B_2)\ (A_3 \text{ XNOR } B_3)$

Circuit Stimulation Share Link:

https://www.tinkercad.com/things/kBShPyzWQ3Y-project-dld2

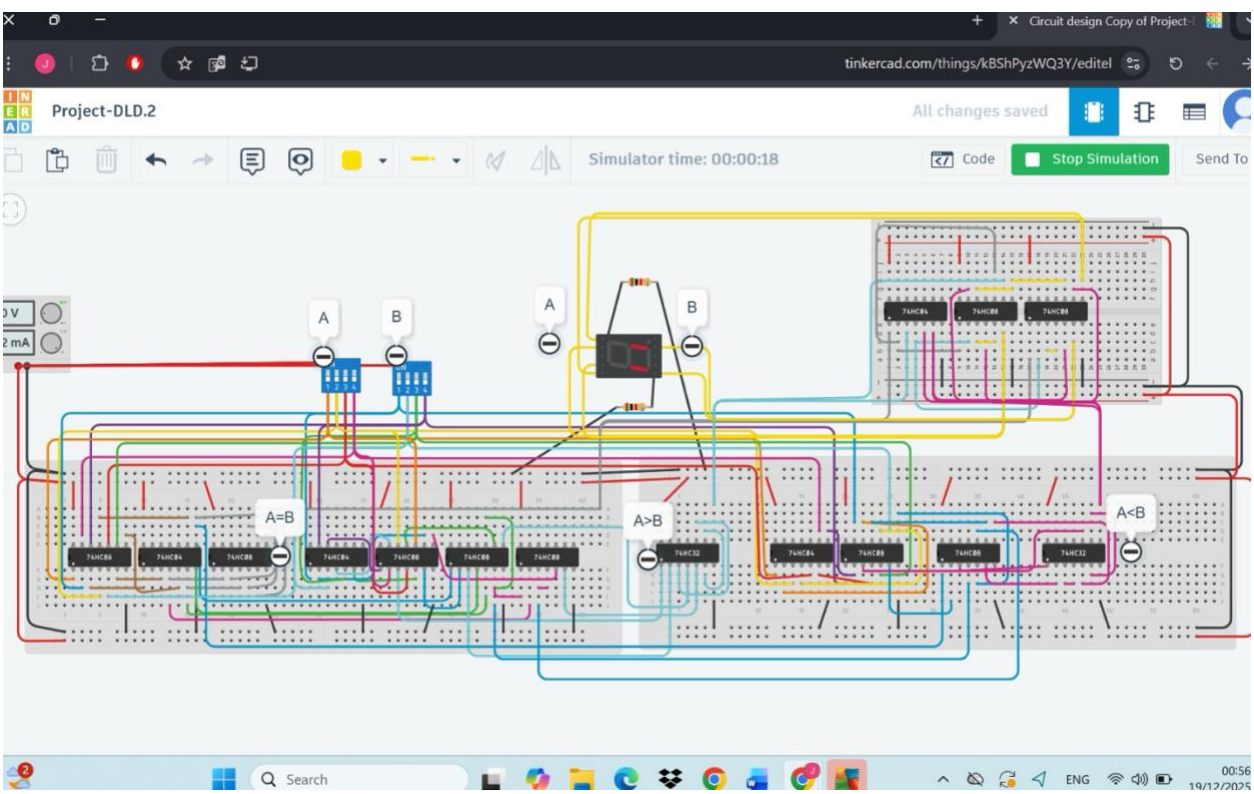

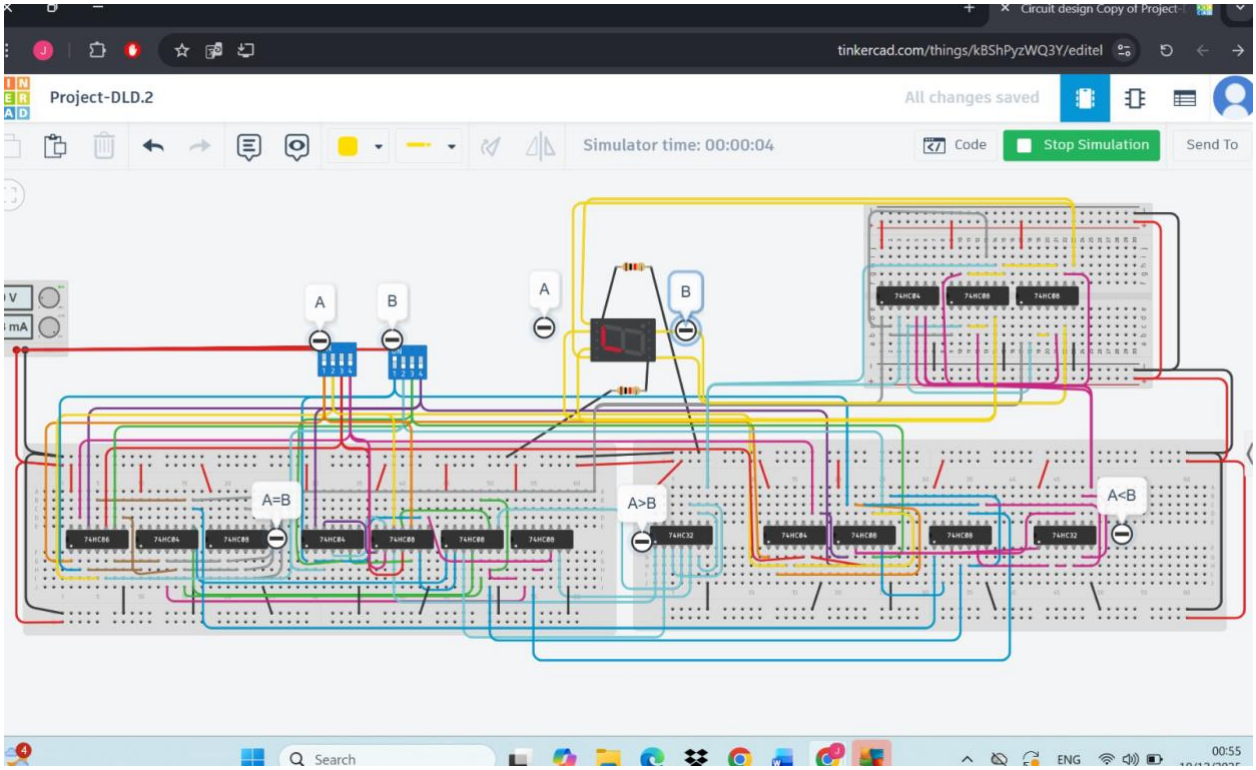
tinkercad.com/things/kBShPyzWQ3Y/editel
Project-DLD.2
All changes saved
Simulator time: 00:00:04
Code
Stop Simulation
Send To
A
B
A
B
A=B
A>B
A<B
Search
ENG
00:55

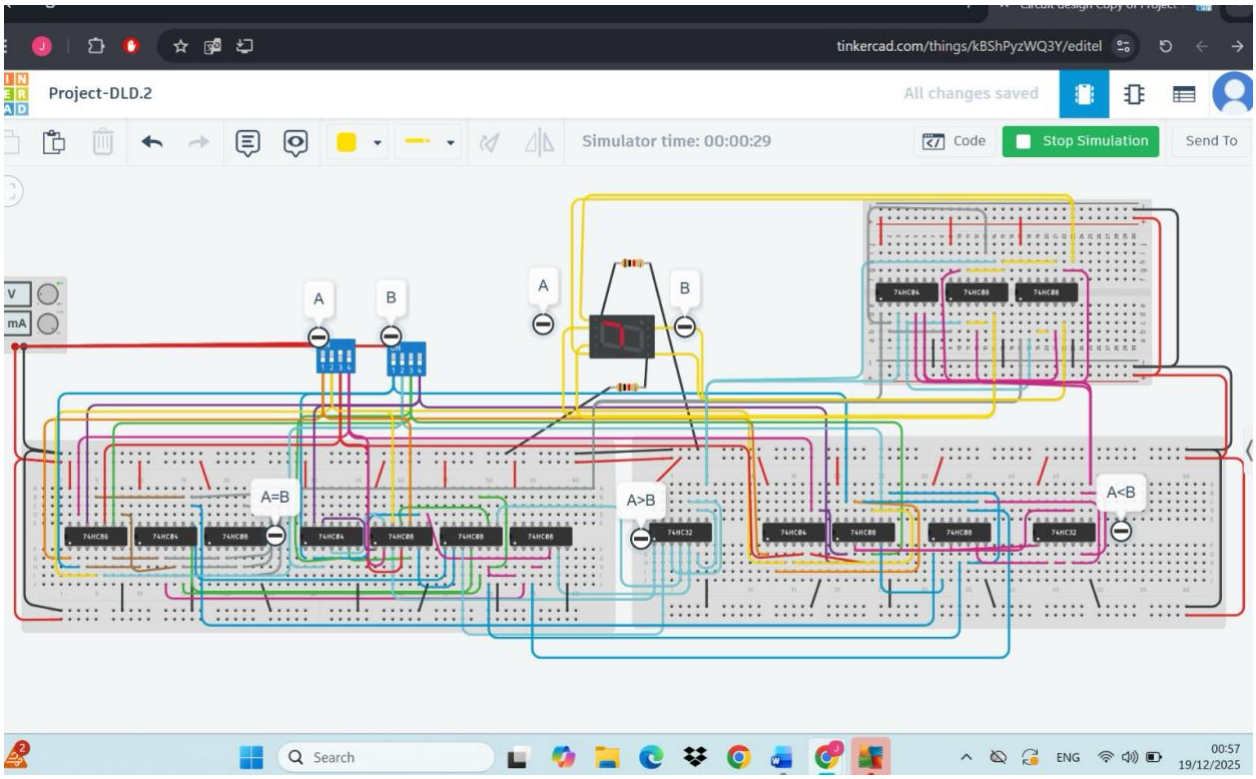
tinkercad.com/things/kBShPyzWQ3Y/editel
Project-DLD.2
All changes saved
Simulator time: 00:00:29
Code
Stop Simulation
Send To
A
B
A
B
A=B
A>B
A<B
Search
ENG
00:57
19/12/2025