Jason Rupp

CAMS-Bot: An Assistive Follower Robot for Mobility-Impaired Users

Agenda

- Problem Statement
- Project Methods (Hardware/Software)
- Results (Simulation or Experiment)
- Challenges & Solutions
- Conclusion

Problem Statement

- Mobility impairments often create struggles transporting loads over distance
- Develop an personal cargo-carrying prototype
- Two-wheeled design for agility in residential settings
- Reduce the physical burden of carrying loads over distance
- Enable users to gain independence

Method

- **Hardware Architecture**
  - Dual-processor control system (Pi 4 + Pico)
  - Raspberry Pi 4 handles high-level decision making
  - Pico manages real-time balance control
  - FIT0186 12V DC motors with encoders
  - Custom parts designed in CAD, 3D printed
  - 8-inch polyurethane wheels

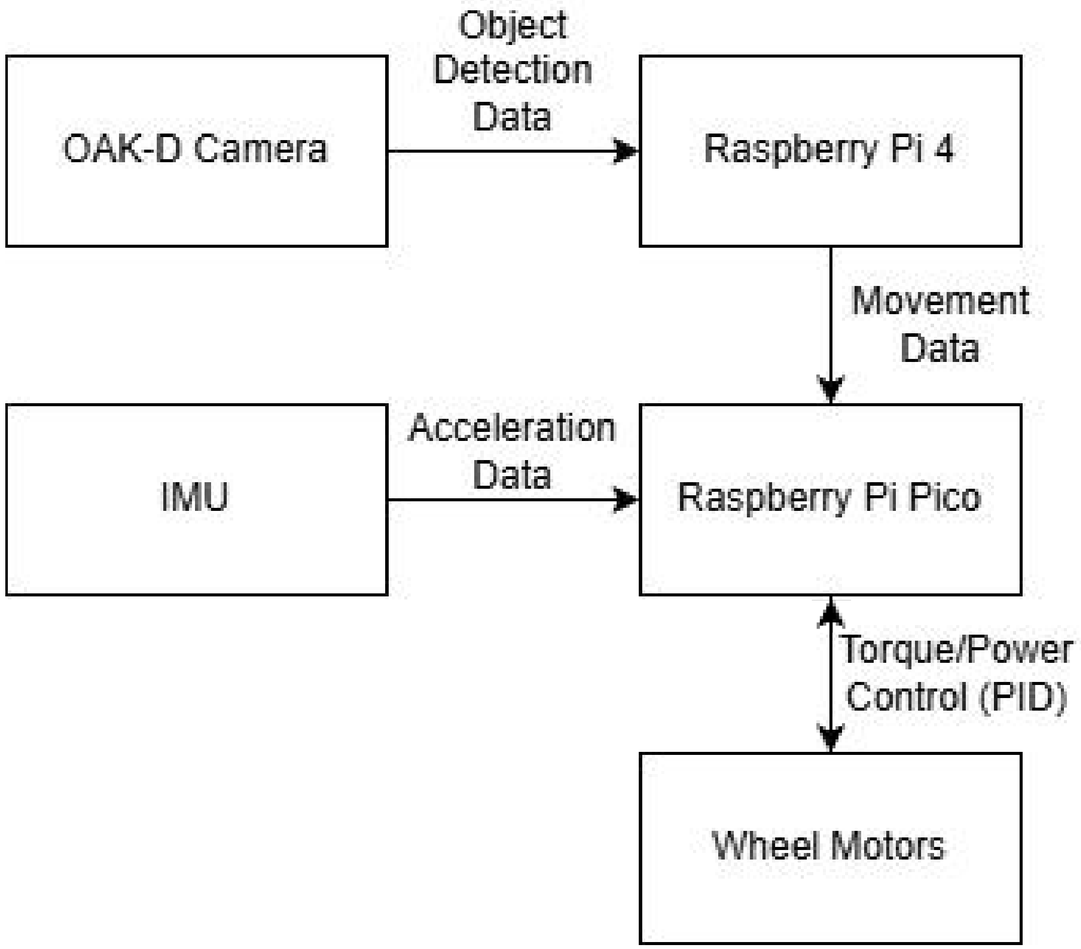

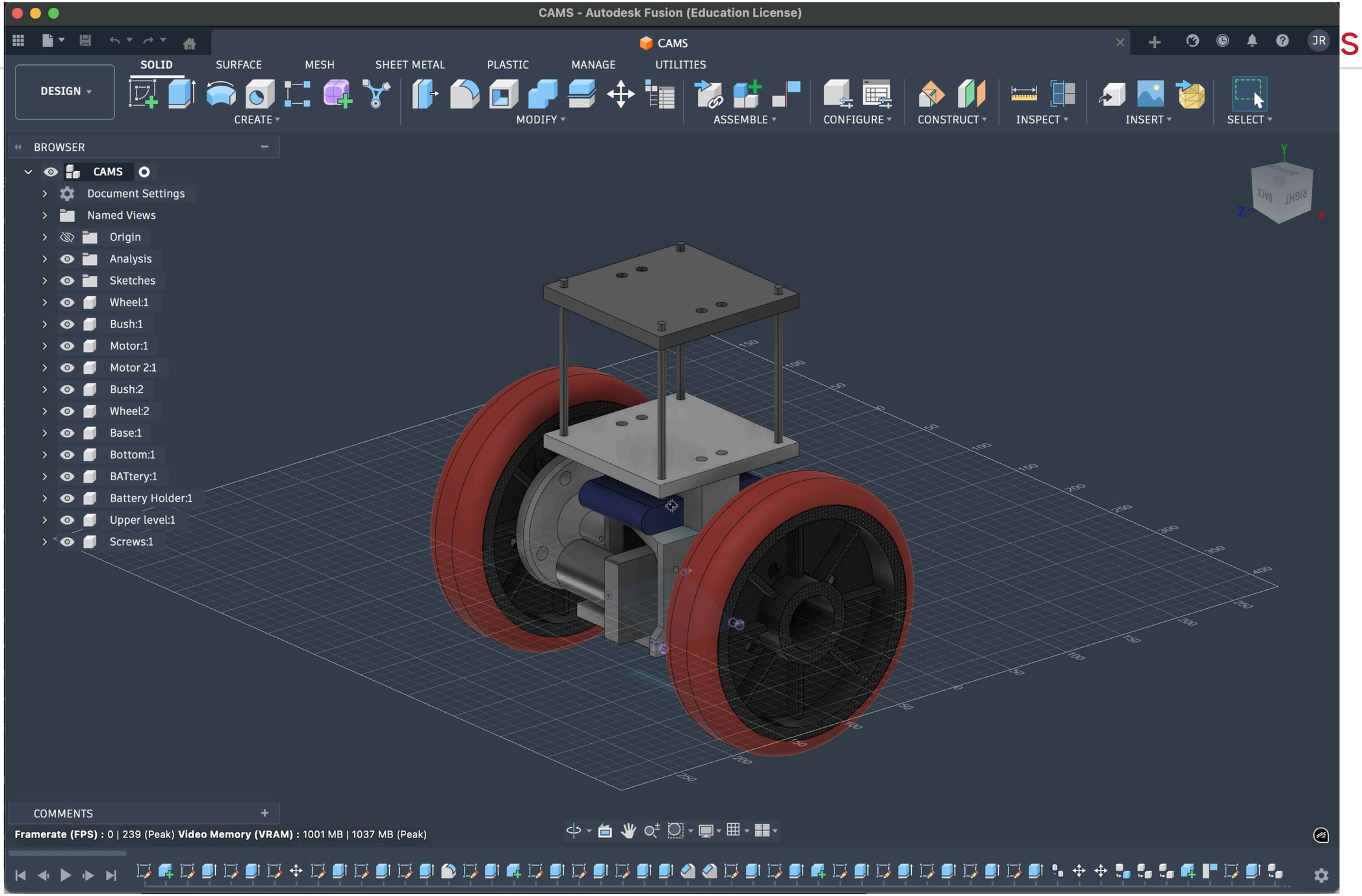
CAMS - Autodesk Fusion (Education License)
CAMS
SOLID
SURFACE
MESH
SHEET METAL
PLASTIC
MANAGE
UTILITIES
DESIGN
CREATE
MODIFY
ASSEMBLE
CONFIGURE
CONSTRUCT
INSPECT
INSERT
SELECT
BROWSER
CAMS
Document Settings
Named Views
Origin
Analysis
Sketches
Wheel:1
Bush:1
Motor:1
Motor 2:1
Bush:2
Wheel:2
Base:1
Bottom:1
BATtery:1
Battery Holder:1
Upper level:1
Screws:1
COMMENTS
Framerate (FPS) : 0 | 239 (Peak) Video Memory (VRAM) : 1001 MB | 1037 MB (Peak)

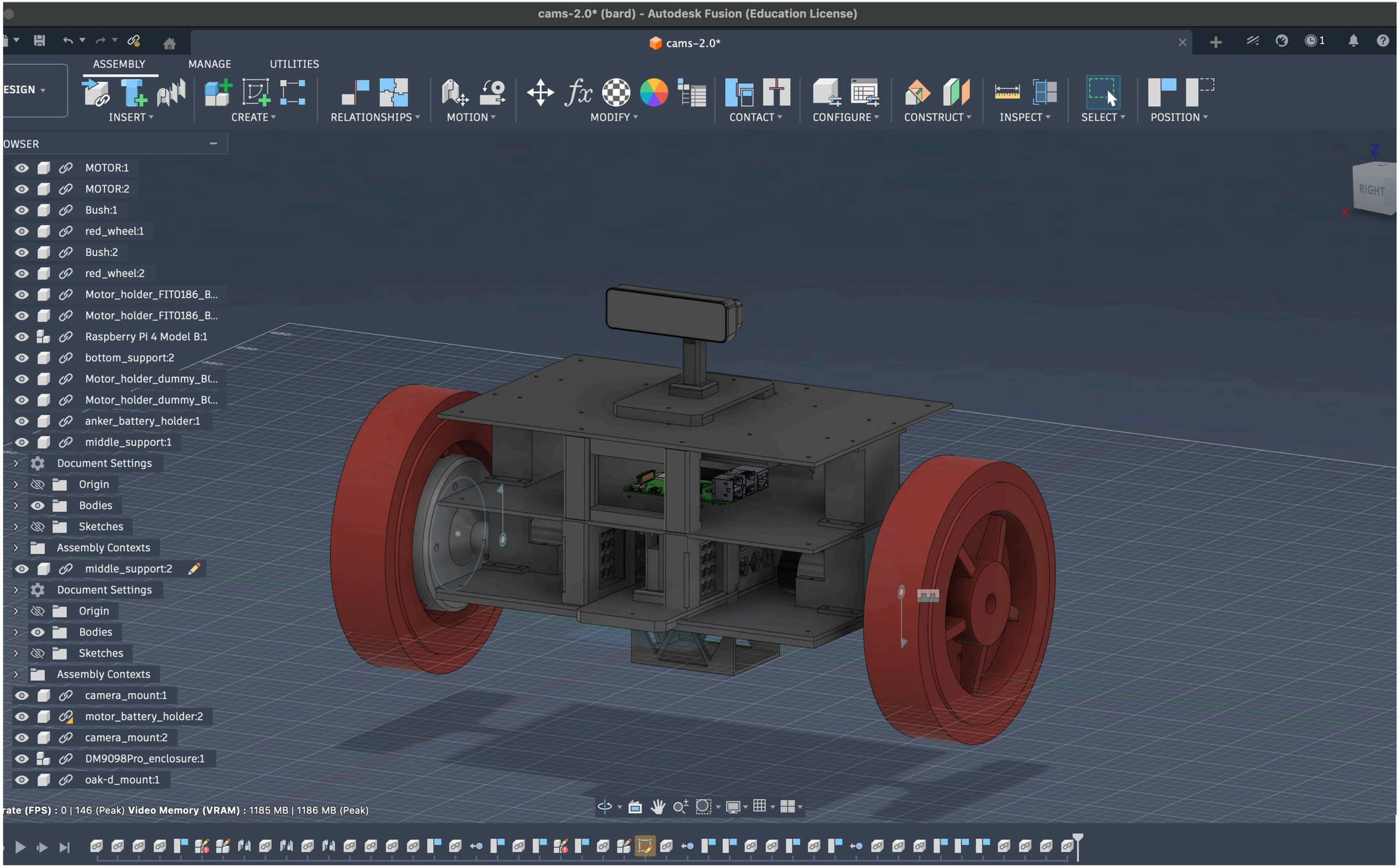
cams-2.0* (bard) - Autodesk Fusion (Education License)
cams-2.0*
ASSEMBLY
MANAGE
UTILITIES
INSERT
CREATE
RELATIONSHIPS
MOTION
MODIFY
CONTACT
CONFIGURE
CONSTRUCT
INSPECT
SELECT
POSITION
MOTOR:1
MOTOR:2
Bush:1
red_wheel:1
Bush:2
red_wheel:2
Motor_holder_FIT0186_B...
Motor_holder_FIT0186_B...
Raspberry Pi 4 Model B:1
bottom_support:2
Motor_holder_dummy_B(...
Motor_holder_dummy_B(...
anker_battery_holder:1
middle_support:1
Document Settings
Origin
Bodies
Sketches
Assembly Contexts
middle_support:2
Document Settings
Origin
Bodies
Sketches
Assembly Contexts
camera_mount:1
motor_battery_holder:2
camera_mount:2
DM9098Pro_enclosure:1
oak-d_mount:1
RIGHT
Video Memory (VRAM) : 1185 MB | 1186 MB (Peak)

Method

- **Custom Made Parts**

Method

- **Custom Made Parts**

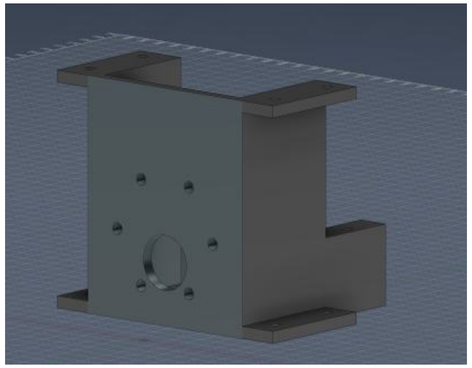
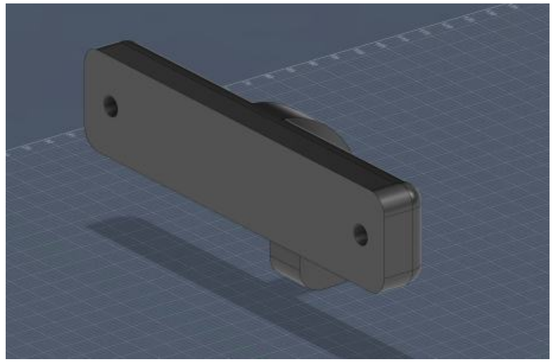
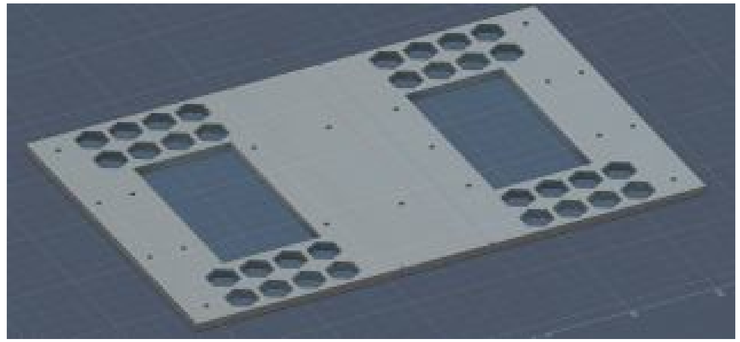
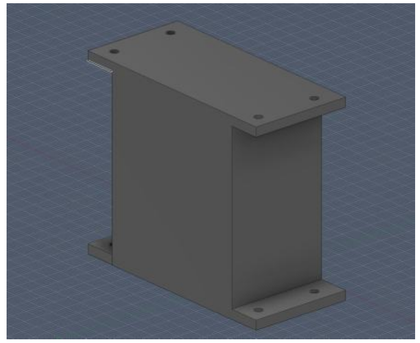
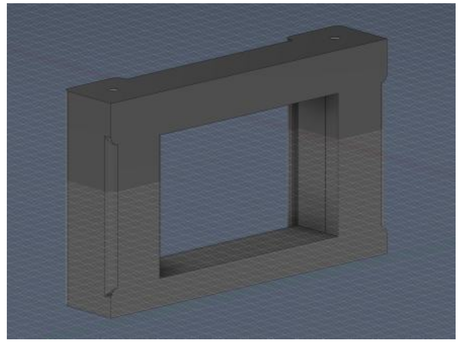
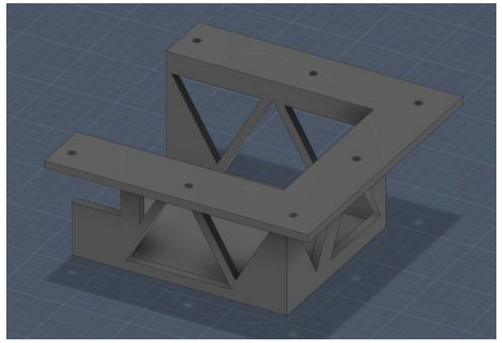
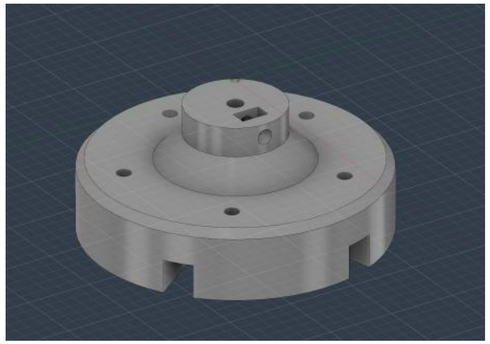
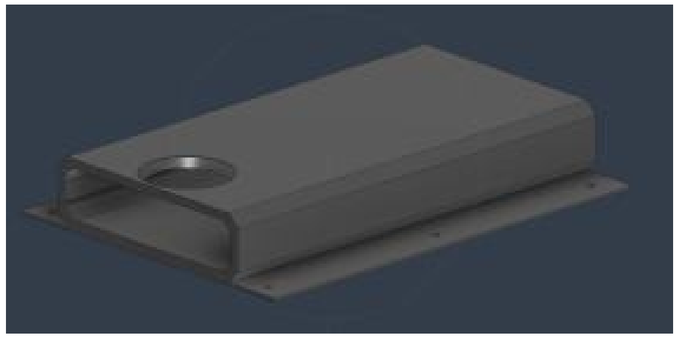
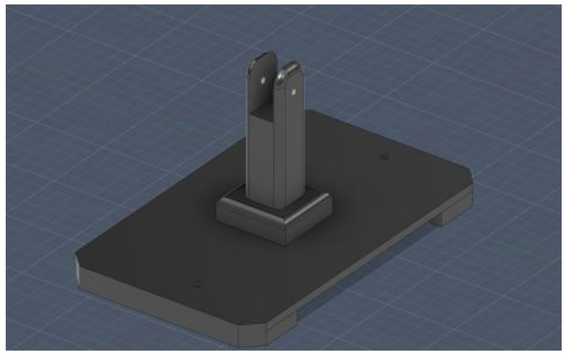
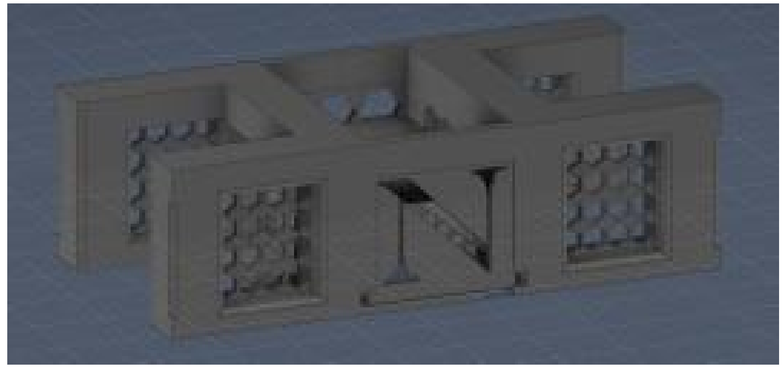

Method

- **Laser cut acrylic platforms from CAD design**

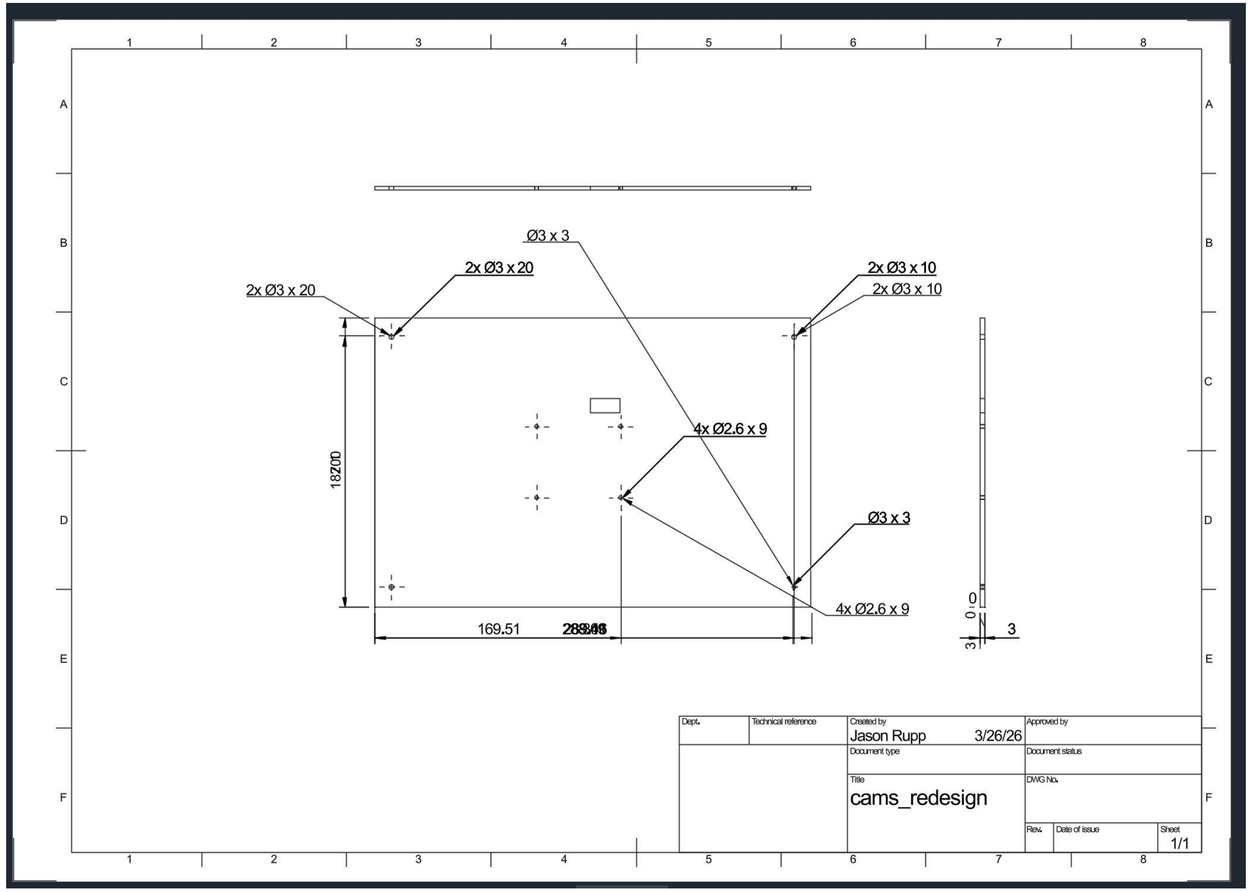

Method

- **Hardware**
  - 12V battery for motors, and hall encoders
  - 5V 3A Anker 10000 mAh Batterypack for Pi, Oak-D and Pico
  - L298 Dual Channel Motor Driver

Method

- **Software**
  - Raspberry Pi 4 runs ROS2 Jazzy Jalisco in Docker
  - Raspberry PID Pico controls balance via a Proportional-Integral-Derivative controllers

Method

Proportional-Integral-Derivative (PID) controller

- Control loop that maintains a set point
- Calculates error from the desired setpoint and current reading.

Method

Proportional-Integral-Derivative (PID) controller

- P: Correct harder when further from target
- I: Correct harder the longer you're off
- D: Slow down when approaching target fast

Method

Proportional-Integral-Derivative (PID) controller

- PID Controllers for angle (IMU) & velocity (Encoders)
- PD only for lean angle - P alone oscillates — D dampens overshoot
- PI only for lean angle - P alone drifts — I eliminates steady-state error

Hardware

Model: BP017
Capacity: 6000mAh
Input: DC 12.6V/2A
Output: DC 9.0-12.6V/3A (Max.)
Protected Li-ion Battery Pack
NYI
6000 mAh
WARNING
Recharge fully every 3 months if not in use for a long time.
Made in China

Live Demo

Challenges & Solutions

Challenges & Solutions

Conclusion

TABLE I
TEAM MEMBER RESPONSIBILITIES

Member	Primary Responsibility
Jason Rupp	Balancing Robot Hardware and Assembly
Timothy Morris	Oak-D Pro software interfaces and integration

Conclusion

1) Level 1 — No Sweat:

- Build a custom self-balancing bot with parts sourced from public online retailers. The body of the robot will be design using Fusion 360 CAD software and 3D printed using PLA or PETG filament. The robot will have Raspberry Pi 4B for compute and use an MPU6050 IMU sensor for balance correction. We will also have a Luxonis Oak-D Pro stereo depth camera, which has 4 TFOPs of on-board compute and can provide a additional sensor data.
- Support 5 kg load along with Oak-D pro camera and other components.
- Enable use of on-board Luxonis Oak-D Pro stereo depth camera to stream live video from the Raspberry Pi to another device.

Conclusion

2) Level 2 — More Ambitious:

- Utilitize the 4 TOPS of processing power on the device to run open source object tracking software using YOLOv6-nano as the vision model. Object Tracking Example
- Use the open source ROS2 package from Luxonis for the Oak-D pro to fully leverage the capabilities of the hardware by integrating it into our hardware. DepthAI ROS2 Package
- Robot follow a target with object tracking or other adequate open-source solution using the compute module on camera.

3) Level 3 — Most Ambitious:

- Use ultra-wideband chips for more accurate tracking of target, or target seeking behavior.
- Increase load limit to 10 kg
- Use thermal stream to detect living beings (rescue applications)

Conclusion

Questions

References

https://www.cdc.gov/disability-and-health/articles-documents/disability-impacts-all-of-us-infographic.html

https://store.foxtech.com/human-following-robot/

https://www.instructables.com/Arduino-Based-Self-Balancing-Bot/