AES Encryption Performance Benchmarking Using Software

Andrew Chang, Adam DeVictoria, Rachel Martinez, Nicholas Williams

Department of Electrical and Computer Engineering, California State Polytechnic University, Pomona
3801 W. Temple Ave., Pomona, CA 91768

***Abstract*— This project evaluates the performance of the Advanced Encryption Standard (AES) using a software implementation written in the C programming language. The system verifies encryption correctness using known test vectors and measures performance by executing encryption repeatedly. The benchmark records total execution time for one million encryptions and calculates the average time required for a single encryption operation. Results demonstrate that encryption time increases as key size increases due to additional encryption rounds. This study highlights how benchmarking can be used to evaluate cryptographic performance and compare computational efficiency across different AES configurations.**

I. Introduction

The Advanced Encryption Standard (AES) is a widely used symmetric encryption algorithm designed to secure digital data. It operates on fixed-size 128-bit blocks and applies a series of transformations using a secret key to convert plaintext into ciphertext. AES supports key sizes of 128, 192, and 256 bits, with larger key sizes requiring additional encryption rounds. Due to its strong security and efficiency, AES is commonly used in applications such as wireless communication, disk encryption, and web security.

In addition to security, the performance of AES is an important consideration, particularly in systems with limited computational resources. This project evaluates the performance of a software-based AES implementation written in C and executed on a MicroBlaze system. By measuring encryption execution time across different key sizes and clock speeds, this work analyzes how algorithm complexity and hardware parameters affect overall performance and highlights the trade-offs between security strength and execution efficiency.

II. Background

AES encrypts data in blocks of 128 bits (16 bytes) and supports multiple key sizes, including 128-bit, 192-bit, and 256-bit keys. The encryption process consists of several rounds of operations including substitution, row shifting, column mixing, and round key addition. Larger key sizes require more rounds, which increases computational workload and execution time.

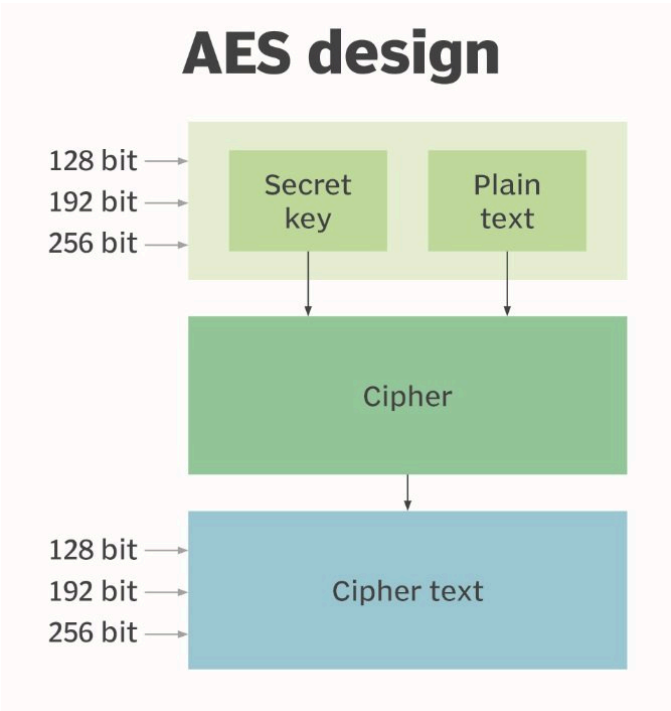

III. System Design and Implementation

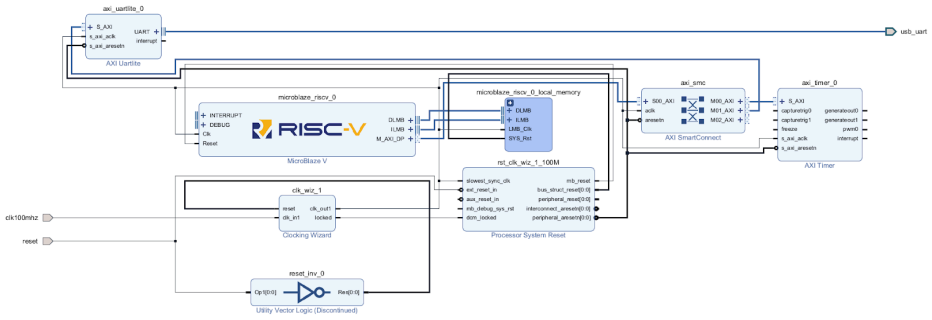

The AES benchmarking system was implemented in the C programming language using a software-based AES library. The program initializes encryption parameters, verifies correctness using known test vectors, and repeatedly executes

The system is built around a MicroBlaze RISC-V processor connected via AXI interconnects to peripherals including a UART interface and timer module. The timer is used to measure encryption execution time, while UART enables communication and result output. Clocking and reset modules ensure synchronized system operation.

IV. System Design and Implementation

The AES benchmarking system was developed using Xilinx Vivado and Vitis on a MicroBlaze-based platform. In Vivado, a block design was created including the MicroBlaze processor, local memory, AXI interconnects, UART for communication, and a hardware timer for performance measurement. Clocking and reset modules were also configured to ensure proper system operation. The hardware design was then exported to Vitis for software development.

In Vitis, the AES encryption algorithm was implemented in C and executed on the MicroBlaze processor. Correctness was verified using known AES test vectors by comparing the generated ciphertext with expected results. For performance evaluation, the encryption process was repeated one million times, and execution time was measured using the hardware timer. Multiple trials were conducted to ensure consistent results.

V. Experimental Results

Each experiment consisted of one million encryption operations. The total execution time was measured for each AES key size configuration. Results showed below in table

AES Configuration	Total Time (s)	Avg Time (µs)
AES-128	392.375	392.375
AES-192	499.125	499.125
AES-256	548.1325	548.1325

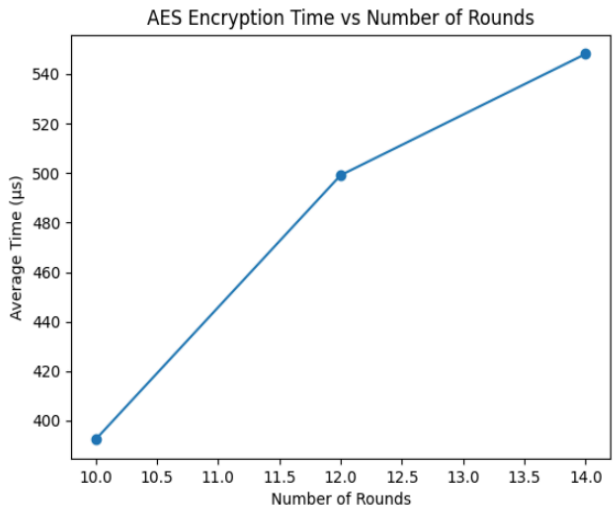

VI. Performance Across Clock Speeds

The results below show that execution time decreases as clock speed increases, demonstrating an inverse relationship between processor frequency and encryption latency. Doubling the clock speed from 50 MHz to 100 MHz approximately halves execution time, which aligns with expected computational scaling.

Clock Speed	**AES-128 (s)**	**AES-192 (s)**	**AES-256 (s)**
50 MHz	784.46	997.92	1096.42
100 MHz	392.38	499.13	548.13
145 MHz	270.32	344.06	274.40

However, minor deviations from perfect scaling are observed, likely due to system overhead and measurement limitations. Additionally, AES-256 consistently requires more time than AES-128 due to the increased number of encryption rounds.

VII. Conclusion

This project successfully implemented AES encryption using a software-based approach and verified correctness using known test vectors. Performance benchmarking demonstrated that encryption time increases with key size due to the additional processing rounds required. Benchmarking provides valuable insight into the computational cost of encryption algorithms and helps evaluate performance trade-offs between security strength and execution speed.

VIII. References

[1] TechTarget, "AES design diagram," *TechTarget*. [Online]. Available: https://www.techtarget.com/rms/onlineImages/security-aes_design.jpg

[2] A. Taylor, "MicroZed Chronicles: MicroBlaze v MCS," *Adiuvo Engineering*, Jun. 12, 2024. [Online]. Available: https://www.adiuvoengineering.com/post/microzed-chronicles-microblaze-v-mcs

[3] Digilent, "Nexys A7 and Arty A7 FPGA trainer board: Recommended for EE curriculum," *Digilent*. [Online]. Available: https://digilent.com/shop/nexys-a7-and-artix-7-fpga-trainer-board-recommended-for-ece-curriculum/