CANoe Test Package EV

Automated Conformance, Interoperability & Security Tests for EVs

What is the CANoe Test Package EV?

The CANoe Test Package EV is a library of powerful test cases. This is used to test conformance and interoperability of electric vehicles (EV) within the standards CCS, NACS, GB/T and CHAdeMO. CANoe Test Package EV covers the relevant test scenarios as well as security tests, is up-to-date at all times and clearly structured.

The execution and editing of test cases is embedded in a tool workflow with vTESTstudio and CANoe. Due to the simple handling of the tools and the seamless tool chain you achieve reliable test results very efficiently.

Depending on the hardware used, which can also be from third party vendors, the execution of test cases is possible in different development stages:

> from initial ECU tests - including remaining bus simulation at component level

> up to the testing of complete vehicles on system level

Overview of Advantages

> Comfortable selection and execution of test cases

> Automatic test execution and report generation

> Fast generation of an executable test environment

> Easily extendable test cases for individual tests

> Openness for the connection of additional test hardware

Application Area

Fully automated conformance and interoperability tests according to specifications of the CCS/NACS (ISO 15118 and DIN 70121), GB/T, and CHAdeMO charging standards. Special security tests are used to identify vulnerabilities and ensure security.

Functions

> Implementation of test cases with test tables and CAPL

> Adaptation of the test cases to the System Under Test

> Selection and visibility of variant dependencies (PICS/PIXIT)

> Traceability to the requirements from the protocol specification

> Support of the CharIN interface to connect third party hardware

> Consideration of the CharIN Design Guide

Generator Tool

At the push of a button, the ‚Generator Tool' of the CANoe Test Package EV creates either a test unit containing the conformance test or a complete sample configuration that can be adapted for testing a real SUT.

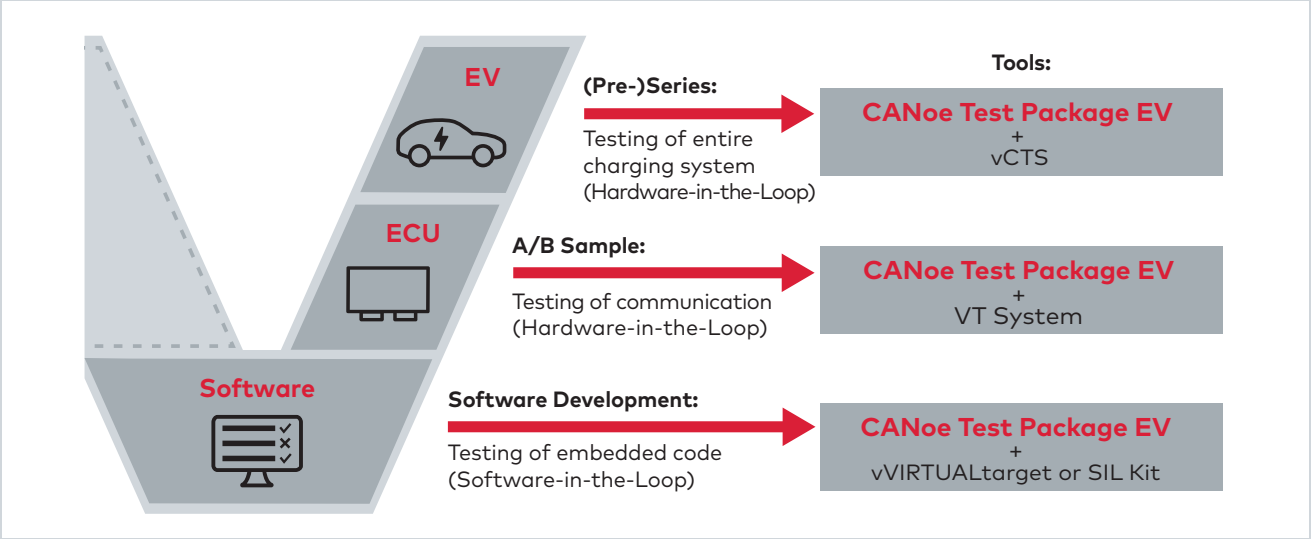

The test cases of CANoe Test Package EV can be used at different integration levels of the development process. This flexibility simplifies your workflows and saves costs.

Requirements

Software

Sending and receiving messages while the test cases are executed is based on the additionally required CANoe options CANoe.SmartCharging and depending on the standard:

> For CCS and NACS: CANoe.Ethernet (CANoe version <19)
> For GB/T: CANoe.J1939
> For CHAdeMO: CANoe.CAN (already included in CANoe)

The test cases are created with vTESTstudio. Any adaptation of the test cases to an existing test environment or to the System Under Test therefore requires vTESTstudio.

Hardware

For the execution of test cases at component level, the control of the Vector hardware interfaces is already directly integrated:

> For security and CCS/NACS: VT5201 + PLCpiggy (QCA7000, QCA7006AQ, MSE1021, CG5317) or VT7970/VT7971/VT7870 which are still supported
> For GB/T: VT2004A, VT2816 and a CAN interface
> For CHAdeMO: VT2004A, VT2816 and a CAN interface

The integration of additional power hardware for testing at system level is possible by means of predefined interfaces.

Example of a Vector test system for electric vehicles to run the conformance tests of CANoe Test Package EV.

Supported Standards

Currently, test cases from DIN 70122, ISO 15118, GB/T 34658 and CHAdeMO (according to Vector's own developed test specification) as well as Vector specific security tests are available.

More information: www.vector.com/canoe_tp_ev

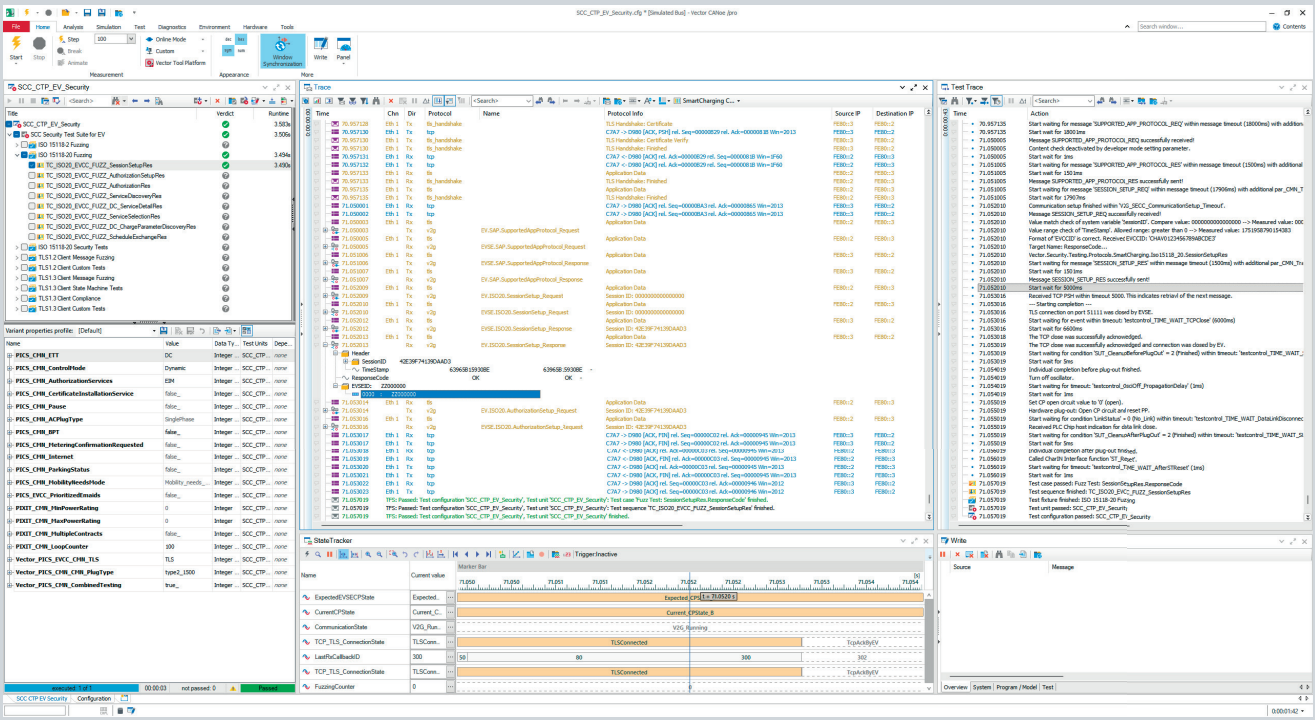

User-friendly test execution with CANoe (security example).

V2.12 | 2025-07