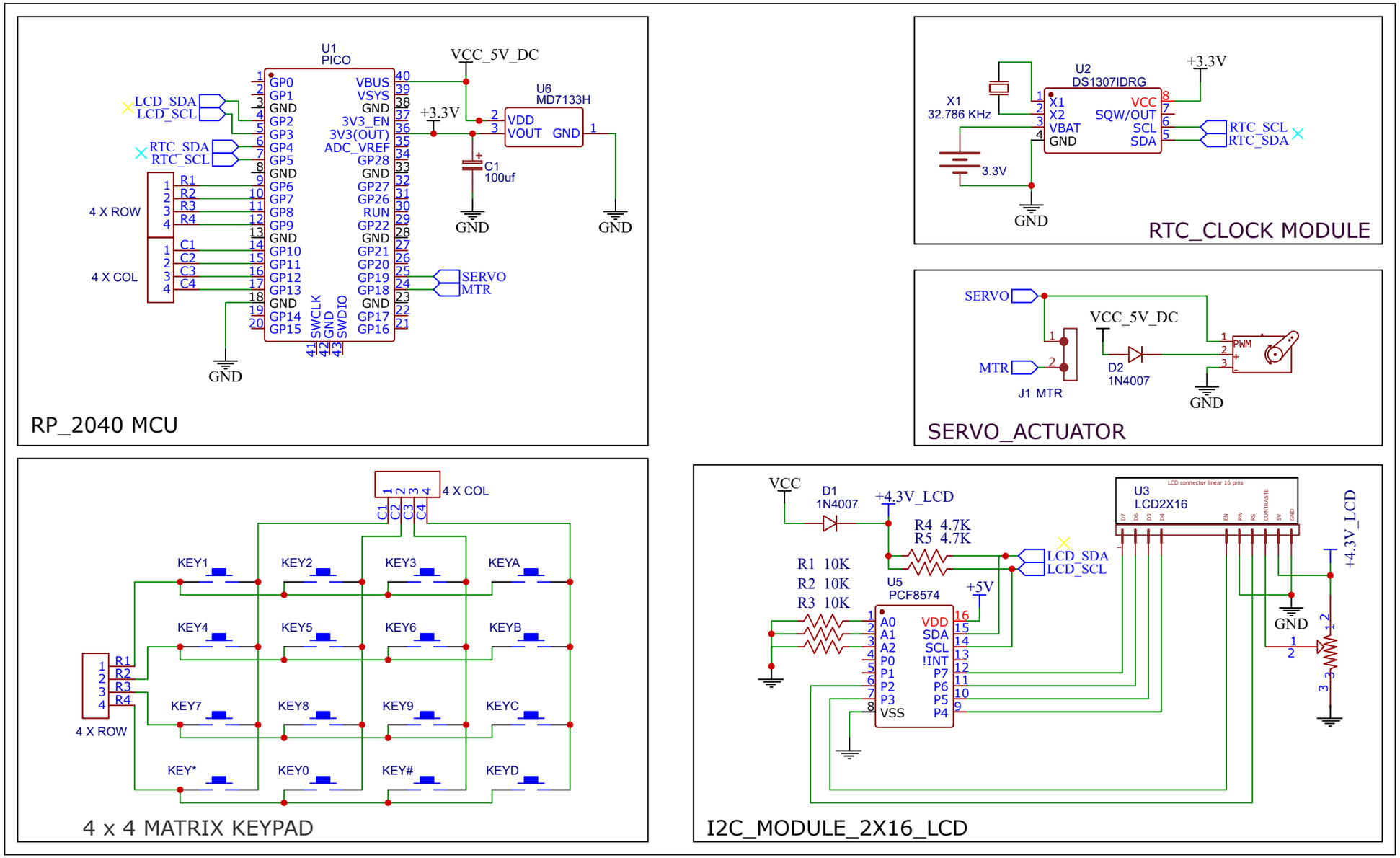

TITLE: IQ LOCK		REV: 1.0
EasyEDA	Company: SBJITMR	Sheet: 1/1
	Date: 2023-11-26 Drawn By: Jayant Dhandale	