Table of Contents

B2H Studios — Infrastructure Implementation Plan

Document Control

Field	Detail
Document Title	B2H Studios Infrastructure Implementation Plan — Option B+ Hybrid
Version	2.0 — Full Implementation
Date	March 2026
Prepared By	VConfi Solutions Team
Approved By	Pending — B2H CTO & IT Lead
Classification	CONFIDENTIAL — RESTRICTED DISTRIBUTION
Document Owner	VConfi Project Manager
Review Cycle	Quarterly

Revision History

Version	Date	Author	Change Description
1.0	March 2026	VConfi Team	Initial design and scoping document
2.0	March 2026	VConfi Team	Full implementation plan — all 6 parts, all SOPs, complete BOM, stress test

Distribution List

Name	Role	Access Level
B2H CTO	Client — approver	Full document
B2H IT Lead	Client — implementation lead	Full document
VConfi Project Manager	Implementation lead	Full document
VConfi Network Engineer	Implementation	Parts 1, 2, 3, 5
VConfi Storage Engineer	Implementation	Parts 1, 2, 3, 4
VConfi Security Engineer	Implementation	Parts 1, 5, 6

Part 1: Executive Summary, Architecture & ISO 27001 Mapping

1.1 Executive Summary

This document is the complete infrastructure implementation plan for B2H Studios, a media production studio with 25 remote editors requiring real-time 4K/8K RAW editing on originals, high-speed media ingest from external partners, and a cloud-connected disaster recovery capability across two physical sites.

The selected architecture is a purpose-built two-tier hybrid storage design — Synology FS6400 (all-flash NVMe, sub-0.5ms latency) as the active project tier and Synology HD6500 (high-capacity HDD, ~936TB usable) as the warm archive and DR replication tier — combined with Fortinet Zero Trust Network Access (ZTNA), FortiGate 120G active-passive HA pairs at both sites, HPE Aruba CX 6300M VSX switching, Signiant Jet v7.0 for media ingest, and Wasabi Hot Cloud Storage for cold archive.

This plan resolves a critical design conflict identified during scoping: B2H Studios requires real-time editing on originals (4K/8K RAW) — a workload requiring sub-millisecond NVMe latency — while also wanting the cost economics of the Synology HD6500. The two-tier hybrid delivers both: NVMe where editors touch data (FS6400, ~115TB active workspace), HDD for everything else (HD6500, ~936TB archive/DR/proxies). The result is equivalent real-time performance to the all-NVMe Option A (Dell PowerScale F710) at approximately 37% of its 5-year total cost of ownership.

Key outcomes this plan delivers:

- Sub-0.5ms NVMe latency for all 25 editors on active 4K/8K projects
- 115TB active workspace on FS6400 — covers the full B2H active project load with headroom
- ~936TB warm storage on HD6500 at Site A — archive, proxies, deliverables, ingest staging
- ~936TB DR storage on HD6500 at Site B — RPO 15 minutes (active) / 4 hours (archive)
- Zero-Trust remote access for 25 editors — device trust + MFA + per-session verification
- Signiant Jet v7.0 SDCX for FASP-accelerated media ingest — 10x faster than HTTPS over WAN
- Wasabi cloud archive at Rs. 498/TB/month — zero egress fees — Hybrid Share automated tiering
- Full ISO 27001:2022 Annex A compliance documentation
- 14-week implementation timeline
- Year 1 all-in cost (incl. GST): Rs. 2,88,03,800
- 5-year TCO (incl. GST): Rs. 5.72 Crore vs. Option A Rs. 15+ Crore

1.2 Architecture Overview

```
╔═══════════════════════════════════════════════════════════════════════════════
═══════════════╗
║                                                                              ╕
│                INTERNET / ISP LAYER                                          │
│  ISP-1 (1Gbps Primary) ──────────┼──────────── ISP-2 (1Gbps Failover)       │
╚═══════════════════════════════════╪═══════════════════════════════════════════
═══════════╝
                                    │ SD-WAN active-active
╔═══════════════════════════════════╪═══════════════════════════════════════════
═══════════╗
║                                                                              ╕
│            SITE A — PRIMARY DATA CENTRE                                      │
│                                  │                                           │
│                                  ▼                                           │
│  ┌──────────────────────────────────────────────────────────────────────────
──────┐  │
│  │ FortiGate 120G — ACTIVE (HA Primary)                                  │  │
│  │ SD-WAN · ZTNA Access Proxy · UTM · IPS · 5-Zone Firewall              │  │
```

```
└──────────────
```

```
│  └──────────────────────────────────────────┘
└──────────────────────────────────────────┘  │
└──────────────────────────────────────────────────────────────────────────────────────────────────────────┘
                │
┌──────────────────────────────┼──────────────────────────────────────────────────────────────────────────────────────────┐
│   CLOUD TIER — WASABI HOT CLOUD STORAGE                                                                                  │
│   Region: ap-southeast-1 (Singapore) · Rs.498/TB/mo                                                                      │
│   Object Lock (WORM) · Zero egress fees · S3-compatible                                                                  │
│   ← Synology Hybrid Share auto-tiers archive + deliverables                                                              │
└──────────────────────────────────────────────────────────────────────────────────────────────────────────────────────────┘
```

REMOTE ACCESS (25 editors — any location)
FortiClient ZTNA → FortiGate ZTNA Proxy → VLAN 20 → VLAN 30 (NFS/SMB)
TPM Certificate + FortiAuthenticator MFA + Kaspersky posture check

1.3 Mermaid Topology Diagram

```
graph TD
   ISP1[ISP 1 — 1Gbps Primary] --> FWA[FortiGate 120G Active]
   ISP2[ISP 2 — 1Gbps Failover] --> FWA
   FWA -->|HA Heartbeat| FWP[FortiGate 120G Passive]
   FWA --> VSX[HPE Aruba CX 6300M VSX Pair]
   FWP --> VSX
   VSX -->|40Gbps LACP| FS6400[Synology FS6400 HOT TIER\n24x7.68TB NVMe · 115TB]
   VSX -->|40Gbps LACP| HD6500A[Synology HD6500 WARM TIER\n60x18TB SAS · 936TB]
   VSX -->|10GbE| R760A[Dell R760 App Server\nSigniant · Vault · FortiAnalyzer\nFortiAuthenticator · EMS]
   FS6400 -->|Sync every 15min| HD6500A
   HD6500A -->|Replication SSL/TLS| HD6500B[HD6500 Site B DR\n936TB]
   HD6500A -->|Hybrid Share| WASABI[Wasabi Cloud\nap-southeast-1\nRs.498/TB/mo]
   HD6500B --> FWB[FortiGate 120G HA Site B]
   HD6500B --> R760B[Dell R760 DR\nFortiAnalyzer 2nd\nVault DR node]
   ZTNA[25 Remote Editors\nFortiClient ZTNA] -->|HTTPS 443| FWA
   SIG[External Media Partners\nSigniant Jet v7.0] -->|FASP UDP 33001| FWA
```

1.4 VLAN Design

VLAN ID	Name	Subnet	Gateway	Purpose	Devices
VLAN 10	DMZ	10.0.10.0/24	10.0.10.1 (FortiGate)	Semi-trusted media ingest zone	Signiant SDCX VM, Aspera fallback VM
VLAN 20	Production	10.0.20.0/24	10.0.20.1 (FortiGate)	Remote editor access and app VMs	25 ZTNA sessions, FortiAnalyzer VM, FortiAuthenticator VM, EMS VM,

VLAN ID	Name	Subnet	Gateway	Purpose	Devices
VLAN 30	Storage	10.0.30.0/24	NONE — isolated	Pure storage fabric — no internet path	Kaspersky SC VM FS6400 10GbE front-end, HD6500 10GbE front-end
VLAN 40	OOB Mgmt	10.0.40.0/24	10.0.40.1 (FortiGate)	Out-of-band management — highest trust	FortiGate mgmt port, switch mgmt VLAN, FS6400 DSM admin port, HD6500 DSM admin port, all VM management NICs, HashiCorp Vault, jump host VM
VLAN 999	Quarantine	10.0.99.0/24	None	Unknown/rogue device holding VLAN	Any 802.1X-failed device

Site B mirrors above with 10.1.x.x subnets.

1.5 IP Address Scheme

Device	Interface	VLAN	IP Address	Notes
FortiGate 120G Active	WAN1	N/A	ISP-1 assigned	Primary ISP
FortiGate 120G Active	WAN2	N/A	ISP-2 assigned	Failover ISP
FortiGate 120G Active	VLAN 10 SVI	10	10.0.10.1	DMZ gateway
FortiGate 120G Active	VLAN 20 SVI	20	10.0.20.1	Production gateway
FortiGate 120G Active	VLAN 40 SVI	40	10.0.40.1	OOB Mgmt gateway
FortiGate 120G Active	HA Mgmt	40	10.0.40.10	HA active management
FortiGate 120G Passive	HA Mgmt	40	10.0.40.11	HA passive management

Device	Interface	VLAN	IP Address	Notes
HPE Aruba CX 6300M SW1	Mgmt0	40	10.0.40.20	Switch 1 OOB management
HPE Aruba CX 6300M SW2	Mgmt0	40	10.0.40.21	Switch 2 OOB management
Synology FS6400	Bond0 (eth0–3 LACP)	30	10.0.30.10	Storage NIC — NFS/SMB traffic
Synology FS6400	eth4 (mgmt)	40	10.0.40.30	DSM admin interface
Synology HD6500 (Site A)	Bond0 (eth0–3 LACP)	30	10.0.30.20	Storage NIC — warm tier traffic
Synology HD6500 (Site A)	eth4 (mgmt)	40	10.0.40.31	DSM admin interface
Dell R760 App Server	NIC1 (VLAN 10)	10	10.0.10.10	Signiant SDCX VM NIC
Dell R760 App Server	NIC2 (VLAN 20)	20	10.0.20.10	App VMs — FortiAnalyzer, EMS, etc.
Dell R760 App Server	NIC3 (VLAN 40)	40	10.0.40.40	iDRAC OOB management
Signiant SDCX VM	eth0	10	10.0.10.11	Media ingest — FASP/HTTPS
FortiAnalyzer VM	eth0	20	10.0.20.11	SIEM — receives logs from FortiGate
FortiAuthenticator VM	eth0	20	10.0.20.12	MFA — RADIUS for ZTNA
FortiClient EMS VM	eth0	20	10.0.20.13	Endpoint management
HashiCorp Vault VM	eth0	40	10.0.40.50	Secrets — OOB Mgmt only
Jump Host VM	eth0	40	10.0.40.51	Admin access point
Kaspersky SC VM	eth0	20	10.0.20.14	Endpoint security admin
Zabbix Server VM	eth0	40	10.0.40.52	Monitoring — SNMP v3 polling
Site B				
FortiGate 120G Active (B)	VLAN 10 SVI	10	10.1.10.1	DMZ gateway Site B

Device	Interface	VLAN	IP Address	Notes
FortiGate 120G Active (B)	VLAN 20 SVI	20	10.1.20.1	Production gateway Site B
FortiGate 120G Active (B)	VLAN 40 SVI	40	10.1.40.1	OOB gateway Site B
Synology HD6500 (Site B)	Bond0 (LACP)	30	10.1.30.20	DR storage NIC
Synology HD6500 (Site B)	eth4 (mgmt)	40	10.1.40.31	DSM admin Site B
Dell R760 DR Server	iDRAC	40	10.1.40.40	OOB management Site B
FortiAnalyzer VM (Site B)	eth0	20	10.1.20.11	Secondary SIEM instance
Vault DR Node (Site B)	eth0	40	10.1.40.50	Vault DR replica

1.6 Firewall Zone Architecture Diagram

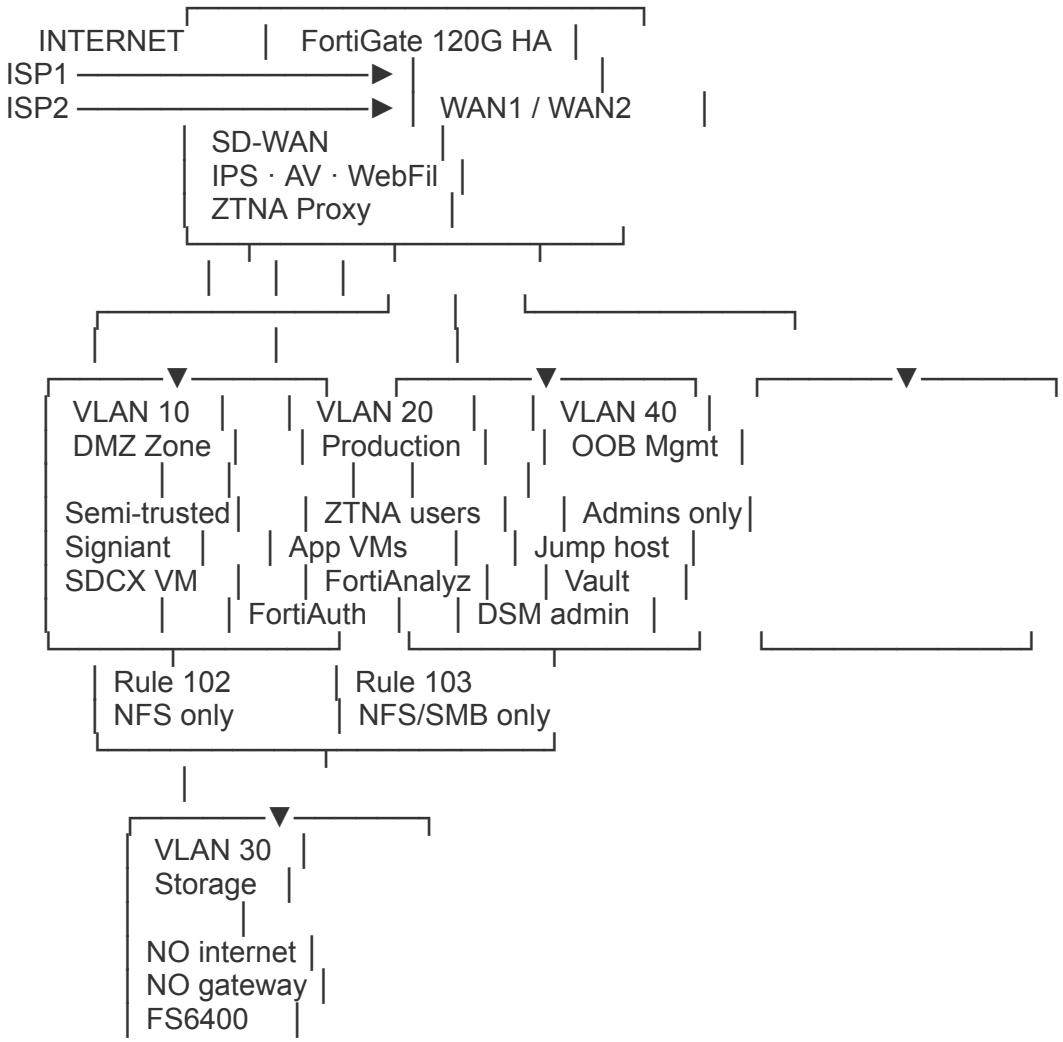

```
│ HD6500    │
└──────────────┘
```

FIREWALL RULES SUMMARY:
Rule 101: ANY → VLAN20 HTTPS/443 (ZTNA proxy — geo-filtered Indian IP)
Rule 102: VLAN10 → VLAN30 TCP/2049 (NFS) ONLY — Signiant ingest
Rule 103: VLAN20 → VLAN30 TCP/2049,445 (NFS,SMB) — Editor access
Rule 104: VLAN40 → ANY (mgmt traffic — jump host outbound)
Rule 105: ANY → ANY DENY (implicit — log all)

1.7 ISO 27001:2022 Annex A Full Control Mapping

Control	Control Name	B2H Implementation Detail	Evidence Type	Owner
A.5.1	Policies for information security	This document + SOP suite constitutes the information security policy set. Annual review scheduled in SOP-SEC-003.	Document	IT Manager
A.5.2	Information security roles and responsibilities	RACI matrix: Network Admin (FortiGate, switches), Storage Admin (NAS, Signiant), IT Manager (governance), CISO (audit, compliance), VConfi (implementation, AMC).	Document	CISO
A.5.3	Segregation of duties	FortiGate admin account ≠ DSM admin account ≠ Vault admin. Three separate Vault policies enforce this. Admin change log	Technical control	IT Manager

Control	Control Name	B2H Implementation Detail captured in FortiAnalyzer.	Evidence Type	Owner
A.5.7	Threat intelligence	FortiGuard UTP subscription provides real-time threat intelligence feeds — AV signatures, IPS signatures, URL categories updated hourly.	Technical control	Network Admin
A.5.8	Information security in project management	VConfi implementation follows this plan. Change management gate at each phase. Acceptance criteria (Section 14) must pass before go-live.	Process	VConfi PM
A.6.1	Screening	B2H HR screening process for all new employees who receive ZTNA access — outside VConfi scope but referenced in SOP-USR-001.	Process	B2H HR
A.6.3	Information security awareness and training	SOP-USR-001 (end-user guide), Kaspersky phishing simulation capability, annual	Process + Technical	IT Manager

Control	Control Name	B2H Implementation Detail	Evidence Type	Owner
		security awareness session. Documented in training register.		
A.6.5	Responsibilities after termination or change of role	SOP-SEC-002 off-boarding procedure: EMS device revocation within 1 hour, FortiAuthenticator account disable, Vault secret revocation, AD account disable.	Process	IT Manager
A.7.1	Physical security perimeters	Server room physical access control — B2H client responsibility. VConfi documents boundary in architecture.	Process (client)	B2H Facilities
A.7.8	Equipment siting and protection	Servers in 42U racks with blanking panels. UPS adjacent. AC unit dedicated circuit. Rack PDU monitoring. Temperature sensors in Zabbix.	Technical + Physical	IT Lead
A.7.9	Security of assets off-premises	Wasabi Object Lock ensures cloud assets cannot be modified or deleted. Site B HD6500 physically	Technical	IT Lead

Control	Control Name	B2H Implementation Detail	Evidence Type	Owner
		secured at DR facility.		
A.7.10	Storage media	Decommissioned drives: secure erase (DSM wipe) + physical destruction certificate. Documented in asset register.	Process	IT Lead
A.7.11	Supporting utilities	2x APC SRT 5kVA UPS (N+1) + ATS. 12-minute runtime at full load. SNMP v3 monitoring in Zabbix. Monthly battery test SOP-BKP-001.	Technical	IT Lead
A.7.12	Cabling security	Cat 6A in conduit. Fiber in armoured trunking. All runs labelled with destination. Patch panel documentation.	Physical	VConfi Cabling
A.7.13	Equipment maintenance	AMC with VConfi for all active hardware. HPE Foundation Care 24x7 4hr response for switches. Preventive maintenance schedule in SOP-SRV-001.	Process + Contract	IT Manager
A.8.1	User endpoint devices	FortiClient EMS policy: disk encryption	Technical	IT Lead

Control	Control Name	B2H Implementation Detail required, Kaspersky running, OS patches current. ZTNA posture check enforces all three per session.	Evidence Type	Owner
A.8.2	Privileged access rights	Vault manages all privileged credentials. RBAC on FortiGate (admin/read-only/network-operator). DSM admin via Vault-rotated password + jump host + MFA only.	Technical	IT Manager
A.8.3	Information access restriction	ZTNA grants per-resource access — editors access only /projects/active and /proxies share paths. Not full VLAN 30 routing.	Technical	Network Admin
A.8.5	Secure authentication	FortiClient ZTNA: TPM device certificate + FortiAuthenticator TOTP MFA. WPA3-Enterprise not applicable (no wireless — studio wired environment).	Technical	Network Admin

Control	Control Name	B2H Implementation Detail	Evidence Type	Owner
A.8.6	Capacity management	FS6400: 115TB usable, 80TB planned active load = 30% headroom. HD6500: 936TB, ~400TB Y1 load = 57% headroom. Switch: 40% port headroom. Server: 30% compute headroom.	Process + Technical	IT Lead
A.8.7	Protection against malware	FortiGate UTM (AV+IPS+WebFilter) on all internet-bound traffic. Kaspersky Endpoint Security on all 25 remote workstations. FortiSandbox Cloud (ATP uplift option).	Technical	Network Admin
A.8.8	Management of technical vulnerabilities	FortiGuard auto-updates. Monthly FortiGate firmware review. DSM auto-update on tested schedule. Vulnerability scan monthly — documented in SOP-SEC-003.	Process	Network Admin
A.8.9	Configuration management	Baseline configs stored in Vault.	Technical	IT Lead

Control	Control Name	B2H Implementation Detail	Evidence Type	Owner
		FortiGate config backed up to FortiAnalyzer daily. Switch config backed up to Zabbix config store. DSM config export weekly.		
A.8.12	Data leakage prevention	FortiGate DLP profile on VLAN 20 outbound: blocks upload of files >50MB to unapproved cloud domains. Storage VLAN 30 has no outbound internet path.	Technical	Network Admin
A.8.13	Information backup	3-2-1-1 backup: FS6400 snapshot (local) + HD6500 (local NAS) + Site B HD6500 (offsite) + Wasabi (cloud). RPO 15 min active / 4hr archive.	Technical	IT Lead
A.8.14	Redundancy of information processing	FortiGate HA (active-passive, sub-3s failover). VSX dual switches (zero-disruption failover). Dell R760 dual PSU + RAID. Dual ISP SD-WAN.	Technical	Network Admin

Control	Control Name	B2H Implementation Detail	Evidence Type	Owner
A.8.15	Logging	FortiAnalyzer: all FortiGate, switch, NAS, and VM logs. Zabbix: performance metrics. Log retention: 90d hot / 1yr warm / 3yr cold. Tamper-proof (write-once).	Technical	IT Manager
A.8.16	Monitoring activities	Zabbix dashboards for all infrastructure. FortiAnalyzer 17 correlation rules. PagerDuty-style alert routing via Zabbix actions. Weekly monitoring review SOP-MON-001.	Technical + Process	IT Lead
A.8.20	Network security	Five-zone VLAN with explicit deny-all default. IPS on all zones. SSL deep inspection on outbound. ZTNA for all remote access. No split-tunnel VPN.	Technical	Network Admin
A.8.21	Security of network services	ISP SLA verified quarterly. SD-WAN health probes every 500ms. FortiGate	Process	Network Admin

Control	Control Name	B2H Implementation Detail	Evidence Type	Owner
		BGP health monitoring. ISP failover tested monthly.		
A.8.22	Segregation of networks	VLAN 10/20/30/40/999 with inter-VLAN routing only via FortiGate. Storage VLAN 30 explicitly isolated — no default gateway. Physical and logical separation.	Technical	Network Admin
A.8.23	Web filtering	FortiGuard Web Filter on VLAN 20 outbound. Categories blocked: malware, botnet, phishing, P2P, adult, hacking tools, proxy avoidance.	Technical	Network Admin
A.8.24	Use of cryptography	ZTNA TLS 1.3 minimum. Site-to-site replication over TLS. DSM HTTPS only (HTTP disabled). Vault TLS. SSH key-based only (password SSH disabled). AES-256 volume encryption at rest on all	Technical	Network Admin

Control	Control Name	B2H Implementation Detail	Evidence Type	Owner
		NAS volumes.		
A.8.26	Application security requirements	Signiant SDCX: FASP with TLS control channel + AES-256 data encryption. Wasabi S3 access via HTTPS + Vault-managed API keys. No plain HTTP APIs in use.	Technical	IT Lead

Part 2: Network, Server & Infrastructure Design

2.1 Firewall Design — FortiGate 120G HA

2.1.1 Hardware Specification

Specification	FortiGate 120G
Form factor	1U rack-mount
Firewall throughput	20 Gbps
IPS throughput	4 Gbps
NGFW throughput	3 Gbps
SSL inspection throughput	2 Gbps
Concurrent sessions	3 million
New sessions/sec	280,000
Interfaces	10x GE RJ45 + 2x GE SFP + 2x 10G SFP+
HA ports	Dedicated HA heartbeat port
Storage	Internal SSD for log buffering
Power	Dual redundant PSU
Deployment	2 units per site — active-passive HA

2.1.2 HA Configuration

FortiGate HA Active-Passive Configuration:

```
config system ha
  set mode a-p
  set group-name "B2H-FW-HA"
  set password <vault-managed>
  set hbdev "port9" 100
  set session-pickup enable
  set session-pickup-connectionless enable
  set override disable
```

```
    set priority 200          # Active unit higher priority
    set monitor "port1" "port2"  # Monitor WAN ports
  end
```

Heartbeat interface: Dedicated back-to-back cable port9 ↔ port9
State sync: All sessions, VPN tunnels, ZTNA sessions
Failover time: < 3 seconds (stateful — sessions preserved)

2.1.3 SD-WAN Configuration

```
config system sdwan
  set status enable
  config members
    edit 1
      set interface "WAN1"
      set gateway <ISP1-gateway>
      set priority 1          # Primary
    next
    edit 2
      set interface "WAN2"
      set gateway <ISP2-gateway>
      set priority 10         # Failover
    next
  end
  config health-check
    edit "ZTNA-probe"
      set server "8.8.8.8"
      set interval 500        # 500ms health check
      set failtime 3
      set recoverytime 5
      set members 1 2
    next
  end
  config service
    edit 1
      set name "ZTNA-traffic"
      set mode sla
      set sla-compare-method number
      set members 1 2
    next
  end
end
```

2.1.4 Firewall Policy Table

Policy ID	Source Zone	Dest Zone	Service	Action	Logging	Notes
101	WAN	ZTNA-Proxy	HTTPS/443	ZTNA-Accept	All	Remote editor access — geo-filtered India
102	WAN	DMZ (VLAN10)	UDP/33001	Accept	All	Signiant FASP —

Policy ID	Source Zone	Dest Zone	Service	Action	Logging	Notes
						partner IPs only
103	DMZ (VLAN10)	Storage (VLAN30)	TCP/2049 (NFS)	Accept	All	Signiant → FS6400 ingest volume only
104	Production (VLAN20)	Storage (VLAN30)	TCP/2049,445	Accept	All	Editor NFS/SMB to NAS
105	Production (VLAN20)	WAN	HTTP,HTTPS	Accept+Inspect	All	Editor internet + FortiGuard WebFilter
106	OOB Mgmt (VLAN40)	ALL internal	ANY	Accept	Security	Admin management traffic
107	Storage (VLAN30)	WAN	ANY	DENY	All	Storage has no internet path — critical
108	DMZ (VLAN10)	Production (VLAN20)	ANY	DENY	All	DMZ cannot reach editors
109	Production (VLAN20)	OOB Mgmt (VLAN40)	ANY	DENY	All	Editors cannot reach management
110	ANY	ANY	ANY	DENY	All	Implicit deny — catches all unmatched

2.1.5 UTM Profile Configuration

FortiGuard UTP Bundle — Applied Profiles:

Profile	Applied To	Settings
AV	All internet-bound policies	Full scan mode + FortiSandbox cloud submit for unknown files

Profile	Applied To	Settings
IPS	All policies	Extended IPS database — block critical/high, alert medium
Web Filter	VLAN 20 outbound	Blocked: Malware/Botnet/Phishing/P2P/Adult/Hacking/ProxyAvoidance
App Control	All policies	Block torrent, anonymous proxy, cryptocurrency mining
Antispam	N/A	No email server in scope
SSL Inspection	VLAN 20 outbound HTTPS	Deep inspection — certificate pinned for known media platforms
DLP	VLAN 20 outbound	Block: files >50MB to non-approved cloud (unapproved = not Wasabi bucket)

2.2 Switch Design — HPE Aruba CX 6300M VSX

2.2.1 Hardware Specification

Specification	HPE Aruba CX 6300M
Form factor	1U rack-mount
Ports	48x 10GbE RJ45 + 4x 25GbE SFP28 uplinks
PoE	802.3bt (PoE++) — 720W PoE budget
Layer	Layer 3 — OSPF, VRRP, LACP, 802.1X
HA	VSX (Virtual Switching Extension) — dual-switch active-active
Switching fabric	136 Gbps
Routing throughput	107 Mpps
MAC table	32,000 entries
Management	Web UI + CLI + REST API
Quantity	2 per site (VSX pair) — 4 total

2.2.2 VSX Stacking Diagram

```
FortiGate HA Pair
(active uplinks to both switches)
    |          |
25GbE SFP28   25GbE SFP28
(port 49)     (port 49)
    |          |
┌──────────────▼──────────────▼──────────────┐
│   VSX ISL (Inter-Switch Link)  │           │
│ ┌──────────────────────────────┐           │
│ │ SW1 (CX 6300M #1)      │   │
│ │ 10.0.40.20             │◄──┤ 25GbE SFP28
│ │ VSX Role: Primary      │   │ ISL port 51+52
```

```
│  └──────────────────────────────────────┘  │ (LACP Bond)
│                        │                    │
│  ┌──────────────────────────────────────┐  │
│  │ SW2 (CX 6300M #2)        │◄────┤       │
│  │ 10.0.40.21             │    │          │
│  │ VSX Role: Secondary      │    │         │
│  └──────────────────────────────────────┘  │
└──────────────────────────────────────────────┘
        │           │
    Port 1-24    Port 25-48
        │           │
Servers/NAS LACP bonds spread across SW1+SW2
```

2.2.3 Port Assignment

Port Range	Assignment	VLAN	Speed	Notes
1–2	FS6400 LACP Bond (eth0, eth1)	Trunk (30,40)	10GbE	NAS hot tier — 20Gbps per switch
3–4	FS6400 LACP Bond (eth2, eth3)	Trunk (30,40)	10GbE	Redundant — total 40Gbps LACP across SW1+SW2
5–6	HD6500 LACP Bond (eth0, eth1)	Trunk (30,40)	10GbE	NAS warm tier
7–8	HD6500 LACP Bond (eth2, eth3)	Trunk (30,40)	10GbE	Redundant LACP
9–10	Dell R760 LACP Bond NIC1+NIC2	Trunk (10,20,40)	10GbE	App server — multi-VLAN trunk
11	UPS #1 SNMP NMC3	40	1GbE	UPS SNMP management
12	UPS #2 SNMP NMC3	40	1GbE	UPS SNMP management
13	ATS monitoring port	40	1GbE	ATS SNMP
49	FortiGate uplink	Trunk (all)	25GbE	SFP28 — FortiGate LAG
50	FortiGate uplink (redundant)	Trunk (all)	25GbE	SFP28 — FortiGate LAG
51–52	VSX ISL bond	N/A	25GbE	Inter-switch link — never assigned to traffic
14–48	Spare / future expansion	—	10GbE	40% headroom maintained

2.2.4 Key Switch Configuration

```
! VLAN definitions
vlan 10
  name DMZ
vlan 20
  name Production
vlan 30
  name Storage
vlan 40
  name OOB-Mgmt
vlan 999
  name Quarantine

! LACP bond to FS6400 (across both VSX members)
interface lag 1
  description "FS6400-Bond"
  no shutdown
  no routing
  vlan trunk allowed 30,40
  lacp mode active
  lacp fallback
interface 1/1/1,1/1/2,2/1/1,2/1/2
  no shutdown
  lag 1

! 802.1X on access ports (NAC)
aaa authentication port-access dot1x authenticator
  enable
  auth-fail-vlan 999
  unauth-vid 999

! VSX configuration
vsx
  system-mac 00:50:56:B2:H1:01
  role primary
  keepalive peer 10.0.40.21 source 10.0.40.20 vrf mgmt
  linkup-delay-timer 180
  isl lag 100
  interface lag 100
    description "VSX-ISL"
    lacp mode active
  interface 1/1/51,1/1/52
    lag 100
```

2.3 Cabling Schedule

Run #	From	From Port	To	To Port	Cable Type	Length	Label
CAB-001	Rack A Patch Panel	PP-A-01	SW1 CX6300M	Port 1	Cat 6A U/FTP	0.5m	FS6400-E0→SW1-P1
CAB-002	Rack A Patch Panel	PP-A-02	SW1 CX6300M	Port 2	Cat 6A U/FTP	0.5m	FS6400-E1→

Run #	From	From Port	To	To Port	Cable Type	Length	Label
							SW1-P2
CAB-003	Rack A Patch Panel	PP-A-03	SW2 CX6300M	Port 1	Cat 6A U/FTP	0.5m	FS6400-E2→SW2-P1
CAB-004	Rack A Patch Panel	PP-A-04	SW2 CX6300M	Port 2	Cat 6A U/FTP	0.5m	FS6400-E3→SW2-P2
CAB-005	FS6400	eth4 (mgmt)	SW1 CX6300M	Port 13	Cat 6A U/FTP	1.5m	FS6400-MGMT→SW1-P13
CAB-006	Rack A Patch Panel	PP-A-05	SW1 CX6300M	Port 5	Cat 6A U/FTP	0.5m	HD6500-E0→SW1-P5
CAB-007	Rack A Patch Panel	PP-A-06	SW1 CX6300M	Port 6	Cat 6A U/FTP	0.5m	HD6500-E1→SW1-P6
CAB-008	Rack A Patch Panel	PP-A-07	SW2 CX6300M	Port 5	Cat 6A U/FTP	0.5m	HD6500-E2→SW2-P5
CAB-009	Rack A Patch Panel	PP-A-08	SW2 CX6300M	Port 6	Cat 6A U/FTP	0.5m	HD6500-E3→SW2-P6
CAB-010	HD6500	eth4 (mgmt)	SW1 CX6300M	Port 14	Cat 6A U/FTP	1.5m	HD6500-MGMT→SW1-P14
CAB-011	Rack A Patch Panel	PP-A-09	SW1 CX6300M	Port 9	Cat 6A U/FTP	0.5m	R760-NIC1→SW1-P9
CAB-012	Rack A Patch Panel	PP-A-10	SW2 CX6300M	Port 9	Cat 6A U/FTP	0.5m	R760-NIC2→SW2-P9
CAB-013	R760	iDRAC port	SW1 CX6300M	Port 15	Cat 6A U/FTP	1.5m	R760-iDRAC→SW1-P15
CAB-014	UPS #1	NMC3 port	SW1 CX6300M	Port 11	Cat 6	2m	UPS1-SNMP→SW1-P11
CAB-015	UPS #2	NMC3 port	SW1 CX6300M	Port 12	Cat 6	2m	UPS2-SNMP

Run #	From	From Port	To	To Port	Cable Type	Length	Label
							→SW1-P12
CAB-016	SW1 CX6300M	Port 49 (SFP28)	FortiGate Active	Port10 (SFP+)	OS2 LC-LC	2m	SW1-P49→FW-P10
CAB-017	SW2 CX6300M	Port 49 (SFP28)	FortiGate Passive	Port10 (SFP+)	OS2 LC-LC	2m	SW2-P49→FW2-P10
CAB-018	SW1 CX6300M	Port 51 (SFP28)	SW2 CX6300M	Port 51 (SFP28)	OS2 LC-LC	0.5m	VSX-ISL-1
CAB-019	SW1 CX6300M	Port 52 (SFP28)	SW2 CX6300M	Port 52 (SFP28)	OS2 LC-LC	0.5m	VSX-ISL-2
CAB-020	FortiGate Active	HA port	FortiGate Passive	HA port	Cat 6A	0.5m	FW-HA-HEARTBEAT
CAB-021	Site A MDF	Fiber trunk	Site B MDF	Fiber trunk	OS2 OM3 12F	Site distance	INTER-SITE-FIBER
CAB-022	FortiGate Active	WAN1	ISP-1 CPE	LAN	Cat 6	3m	ISP1-WAN
CAB-023	FortiGate Active	WAN2	ISP-2 CPE	LAN	Cat 6	3m	ISP2-WAN

All Cat 6A runs: U/FTP, 10GbE rated, tested to TIA-568-C.2. All runs labelled at both ends with permanent adhesive labels including source, destination, and run number. CommScope brand throughout.

2.4 Redundancy — Scenario A (Full HA)

Component	Primary	Secondary	Failover Method	Failover Time	RTO Impact
FortiGate firewall	Active unit	Passive unit	HA heartbeat — stateful	<3 seconds	Sessions preserved
ISP connectivity	ISP-1 (WAN1)	ISP-2 (WAN2)	SD-WAN health probe	<500ms	Seamless for TCP
Switching	SW1 (VSX Primary)	SW2 (VSX Secondary)	VSX automatic	<1 second	Zero — active-active
FS6400 LACP bond	4 paths (40Gbps)	2 paths minimum	LACP failover	Immediate	Throughput reduced
Dell R760 PSU	PSU-1	PSU-2	Hardware automatic	Immediate	Zero — hot-standby

Component	Primary	Secondary	Failover Method	Failover Time	RTO Impact
Dell R760 RAID	RAID-1 (OS), RAID-10 (data)	Parity/mirror drive	Hardware RAID controller	Zero	Automatic rebuild
Site-level DR	Site A	Site B	Manual runbook SOP-DR-001	4 hours	Full DR failover
Power — UPS	UPS-1 (primary)	UPS-2 (N+1)	ATS <4ms transfer	<4 milliseconds	Zero — transparent

---

2.5 Wireless Design Note

B2H Studios is a controlled media production facility. **Wireless access is not part of this implementation** — all workstations connect via wired 10GbE to HPE Aruba CX 6300M access ports. This is a deliberate security decision:

- Eliminates wireless attack surface (evil twin, deauth, PMKID crack)
- Avoids wireless interference with studio audio/video equipment
- All 25 remote editors access via ZTNA over their local internet — wireless at their home offices is their own responsibility (Kaspersky endpoint protection covers their devices)

If wireless is required in future (client briefing area, meeting rooms), FortiAP 431G (Wi-Fi 6E, WPA3-Enterprise) managed by FortiGate wireless controller can be added without hardware changes — the VSX switches have spare PoE++ ports available.

2.6 Server Design — Dell PowerEdge R760

2.6.1 Site A — Primary Application Server

Component	Specification	Purpose
Model	Dell PowerEdge R760	2U rack-mount
CPU	2x Intel Xeon Gold 6438Y+ (32 cores each = 64 cores total)	VM host compute
RAM	256GB DDR5 ECC (8x 32GB DIMMs)	VM memory pool
OS Drives	2x 480GB NVMe SSD — RAID-1 (mirror)	VMware ESXi hypervisor
Data Drives	4x 3.84TB NVMe SSD — RAID-10	VM datastore — all VMs
RAID Controller	PERC H755 — hardware RAID	OS + data RAID
Network	2x 10GbE OCP NIC + 1x iDRAC Dedicated	Multi-VLAN trunk + OOB mgmt
Power	2x 800W PSU (hot-swap, redundant)	N+1 power
Management	iDRAC Enterprise 3yr	Out-of-band server management
OS	VMware ESXi 8.0 (or Proxmox VE 8.x)	Hypervisor

2.6.2 Site B — DR Application Server

Component	Specification	Purpose
Model	Dell PowerEdge R760	2U rack-mount
CPU	2x Intel Xeon Silver 4416+ (20 cores each = 40 cores total)	Lighter DR load
RAM	128GB DDR5 ECC (4x 32GB DIMMs)	DR VM pool
OS Drives	2x 480GB NVMe SSD — RAID-1	ESXi hypervisor
Data Drives	2x 3.84TB NVMe SSD — RAID-1	DR VM datastore
RAID Controller	PERC H755	Hardware RAID
Network	2x 10GbE OCP NIC + 1x iDRAC Dedicated	Multi-VLAN + OOB
Power	2x 800W PSU redundant	N+1 power
Management	iDRAC Enterprise 3yr	OOB management
OS	VMware ESXi 8.0	Hypervisor

2.6.3 Virtualization Plan — Site A VM Inventory

VM Name	vCPUs	RAM	Disk	Network	OS	Purpose
signiant-sdcx-01	8	32GB	500GB thin	VLAN 10	Ubuntu 22.04 LTS	Signiant Jet v7.0 SDCX — primary ingest engine
fortianalyzer-01	4	16GB	2TB thin	VLAN 20	FortiAnalyzer VM	SIEM — 100GB/day ingestion — 90d hot log storage
fortiauth-01	4	8GB	200GB thin	VLAN 20	FortiAuthenticator VM	RADIUS MFA for ZTNA — 500 user license
forti-ems-01	4	8GB	200GB thin	VLAN 20	FortiClient EMS VM	ZTNA endpoint management — 25 seats
vault-01	2	8GB	100GB thin	VLAN 40	Ubuntu 22.04 LTS	HashiCorp Vault — secrets management

VM Name	vCPUs	RAM	Disk	Network	OS	Purpose
jumphost-01	2	4GB	80GB thin	VLAN 40	Ubuntu 22.04 LTS	Admin jump host — only entry to OOB VLAN
kasperskey-sc-01	4	8GB	200GB thin	VLAN 20	Windows Server 2022	Kasperskey Security Centre — 25 endpoint policies
zabbix-01	4	8GB	500GB thin	VLAN 40	Ubuntu 22.04 LTS	Zabbix 6.4 LTS — SNMP v3 monitoring all devices
aspera-fallback-01	4	8GB	200GB thin	VLAN 10	Ubuntu 22.04 LTS	Aspera HSTS — fallback if Signiant unavailable
Total Site A	**36 vCPU**	**100GB**	**~4TB**	—	—	28 vCPU / 156GB RAM free (30%+ headroom)

2.6.4 Virtualization Plan — Site B VM Inventory

VM Name	vCPUs	RAM	Disk	Network	OS	Purpose
fortianalyzer-dr-01	4	16GB	2TB thin	VLAN 20	FortiAnalyzer VM	Secondary SIEM — receives log forwarding from Site A
vault-dr-01	2	4GB	50GB thin	VLAN 40	Ubuntu 22.04 LTS	Vault DR node — unseal key

VM Name	vCPUs	RAM	Disk	Network	OS	Purpose
						redundancy
jumphost-dr-01	2	4GB	50GB thin	VLAN 40	Ubuntu 22.04 LTS	DR admin jump host
Total Site B	**8 vCPU**	**24GB**	**~2.1TB**	—	—	32 vCPU / 104GB RAM available for DR VMs

2.6.5 Server Rack Layout Diagram

```
┌──────────────────────────────────────────┐
│ 42U RACK A — SITE A                      │
├──────────────────────────────────────────┤
│ U1–2   │ Dell R760 App Server            │
│ U3     │ FortiGate 120G Active           │
│ U4     │ FortiGate 120G Passive          │
│ U5–6   │ HPE Aruba CX6300M SW1           │
│ U7–8   │ HPE Aruba CX6300M SW2           │
│ U9–12  │ Synology FS6400 (4U)            │
│ U13–16 │ Synology HD6500 (4U)            │
│ U17    │ 24-port Patch Panel A           │
│ U18    │ 24-port Patch Panel B           │
│ U19    │ ATS (30A)                       │
│ U20    │ Rack PDU A                      │
│ U21    │ Rack PDU B                      │
│ U22–26 │ [SPARE — expansion]             │
│ U27–34 │ APC SRT 5kVA UPS #1             │
│ U35–42 │ APC SRT 5kVA UPS #2             │
└──────────────────────────────────────────┘
```

```
┌──────────────────────────────────────────┐
│ 42U RACK B — SITE B                      │
├──────────────────────────────────────────┤
│ U1–2   │ Dell R760 DR Server             │
│ U3     │ FortiGate 120G Active           │
│ U4     │ FortiGate 120G Passive          │
│ U5–6   │ HPE Aruba CX6300M SW1           │
│ U7–8   │ HPE Aruba CX6300M SW2           │
│ U9–12  │ Synology HD6500 (4U)            │
│ U13    │ 24-port Patch Panel             │
│ U14    │ Rack PDU                        │
│ U15–22 │ [SPARE]                         │
│ U23–30 │ APC SRT 5kVA UPS                │
└──────────────────────────────────────────┘
```

Part 3: Disaster Recovery, Monitoring & Power

3.1 Backup Architecture — 3-2-1-1 Rule

B2H Studios uses a 3-2-1-1 backup strategy — 3 copies, on 2 different media, 1 offsite, 1 immutable (cloud WORM).

3.1.1 Backup Flow Diagram

```
┌──────────────────────────────────────────────────────────────────────────────────────────────────────────┐
│                                   BACKUP DATA FLOW                                                       │
│                                                                                                          │
│  FS6400 (Active Projects — NVMe)                                                                         │
│  ├─ COPY 1 (local): DSM Snapshot every 2hr, 48 retained (96hr)                                           │
│  │   └─ Immutable lock — cannot be deleted via SMB or DSM UI                                             │
│  │                                                                                                       │
│  └─▶ HD6500 Site A (Warm Archive)                                                                        │
│      ├─ COPY 2 (local NAS): Replication Manager — 15min RPO                                              │
│      │  Active projects sync every 15 minutes                                                            │
│      │  Archive/delivered sync every 4 hours                                                             │
│      │                                                                                                   │
│      └─▶ HD6500 Site B (DR)                                                                              │
│          ├─ COPY 3 (offsite): Replication over SSL/TLS                                                   │
│          │  RPO 15min active / 4hr archive                                                               │
│          │  Verify integrity with SHA-256 checksums                                                      │
│          │                                                                                               │
│          └─▶ Wasabi Hot Cloud Storage (Singapore)                                                        │
│              └─ COPY 4 (immutable cloud): Hybrid Share                                                   │
│                 Object Lock (WORM) — 365-day retention minimum                                           │
│                 Deliverables auto-tier after 30 days                                                     │
│                 Archive auto-tier after 30 days                                                          │
└──────────────────────────────────────────────────────────────────────────────────────────────────────────┘
```

Backup Copy Matrix:
- Copy 1 → FS6400 snapshots (NVMe — fastest restore)
- Copy 2 → HD6500 Site A (same building, different media)
- Copy 3 → HD6500 Site B (different city/building)
- Copy 4 → Wasabi cloud (different geography, immutable WORM)

3.1.2 RPO / RTO Targets

System	Data Category	RPO Target	RTO Target	Recovery Method	Recovery Time Test
FS6400 active projects	4K/8K originals	2 hours	30 minutes	DSM snapshot restore in place	Quarterly test
FS6400 active projects	4K/8K originals	15 minutes	1 hour	Promote HD6500 Site A copy	Quarterly test
HD6500 archive	Completed projects	4 hours	2 hours	Replication failover to Site B	Quarterly test

System	Data Category	RPO Target	RTO Target	Recovery Method	Recovery Time Test
HD6500 deliverables	Client deliverables	4 hours	2 hours	Site B promotion + WORM recall	Quarterly test
Wasabi cloud archive	Cold archive	30 days	4–8 hours	Hybrid Share recall (transparent)	Annual test
FortiGate config	Network policies	24 hours	15 minutes	FortiAnalyzer config backup restore	Monthly test
VM config (ESXi)	All application VMs	4 hours	1 hour	DSM Snapshot + VM clone from backup	Quarterly test
Full site failover	All systems Site A	15 minutes (active)	4 hours	SOP-DR-001 runbook execution	Semi-annual test
FortiGate HA failover	Firewall state	0 (stateful)	1–3 seconds	HA automatic — sessions preserved	Monthly test
ZTNA session	Editor connectivity	0 (stateful HA)	1–3 seconds	FortiGate HA failover	Monthly test

3.2 DR Site Plan

3.2.1 Site B Specification

Parameter	Detail
Location	Separate building — minimum 10km from Site A (flood, power zone diversity)
Tier	DR — warm standby — not hot standby
Primary systems	Synology HD6500 (DR unit) + FortiGate 120G HA + HPE Aruba VSX + Dell R760 DR
Internet	Dedicated ISP circuit at Site B — independent of Site A ISP
Replication link	Site A HD6500 → Site B HD6500 over SSL/TLS via internet (or dedicated MPLS if available)
Power	Independent commercial power circuit + 1x APC SRT 5kVA UPS

Parameter	Detail
ZTNA failover	Site B FortiGate acts as secondary ZTNA proxy — editors re-authenticate to Site B FQDN

3.2.2 DR Failover Runbook (SOP-DR-001 Summary)

Step	Action	Responsible	Time (min)	Verification
1	Declare disaster — Site A unavailable	IT Manager	0	Zabbix/FortiAnalyzer alert confirmed
2	Verify Site B HD6500 replication status	IT Lead	5	DSM → Replication Manager → last sync time
3	Stop all replication jobs (prevent further writes)	IT Lead	5	DSM Replication → Disable all jobs
4	Promote Site B HD6500 shared folders to read-write	IT Lead	10	DSM → Shared Folders → Remove read-only
5	Update DNS — ZTNA FQDN points to Site B FortiGate WAN IP	Network Admin	10	nslookup verify propagation
6	Verify FortiGate Site B is active and healthy	Network Admin	5	FortiGate GUI → Dashboard → Active
7	Test editor ZTNA connectivity to Site B	IT Lead	15	3 test users connect and verify NAS access
8	Notify all 25 editors — reconnect to ZTNA	IT Manager	10	Email + phone blast
9	Monitor Site B operations	IT Lead	Ongoing	Zabbix dashboard + FortiAnalyzer
10	Begin Site A recovery / root cause analysis	VConfi support	Ongoing	Escalate to VConfi if hardware failure
Total failover time			**~60 min**	All editors reconnected

3.2.3 Failback Procedure (After Site A Recovery)

Step	Action	Time	Notes
1	Restore/replace failed hardware at Site A	Variable	VConfi support + HPE Foundation Care
2	Verify Site A systems healthy	30 min	FortiGate, switches, FS6400, HD6500
3	Run reverse replication — Site B → Site A	2–4 hours	Changes made during DR replicated back
4	Verify Site A data integrity	30 min	Checksums, spot-check key project files
5	Switch editors back to Site A ZTNA FQDN (DNS update)	15 min	Notify editors to reconnect
6	Resume normal forward replication Site A → Site B	15 min	DSM Replication → Enable
7	Document incident — RCA completed	24 hours	SOP-SEC-002 incident report

3.3 Monitoring Architecture — Zabbix 6.4

3.3.1 Zabbix Architecture

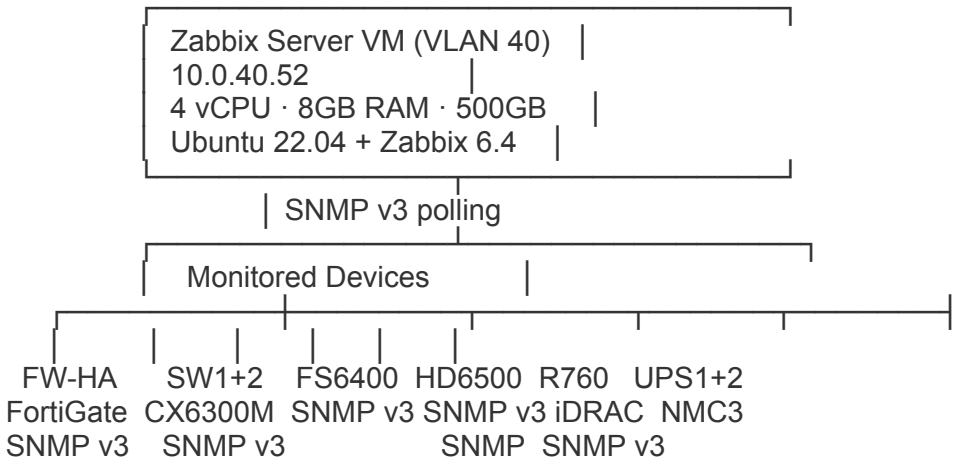

3.3.2 Monitored Devices and Metrics

Device	SNMP Version	Monitored Metrics	Alert Threshold	Alert Severity
FortiGate 120G Active	v3	CPU utilisation	>80% sustained 5min	High
FortiGate 120G Active	v3	Memory utilisation	>85%	High
FortiGate 120G Active	v3	Active sessions	>2,500,000	Warning

Device	SNMP Version	Monitored Metrics	Alert Threshold	Alert Severity
FortiGate 120G Active	v3	HA state	Not “Active”	Critical
FortiGate 120G Active	v3	Interface up/down	Any WAN down	Critical
FortiGate 120G Active	v3	VPN tunnels	Tunnel down	High
HPE Aruba SW1/SW2	v3	CPU utilisation	>70%	Warning
HPE Aruba SW1/SW2	v3	Port error rate	>0.01% per port	Warning
HPE Aruba SW1/SW2	v3	PoE budget used	>90%	High
HPE Aruba SW1/SW2	v3	VSX peer state	Not “peer-up”	Critical
HPE Aruba SW1/SW2	v3	Fan/temperature	>55°C	High
Synology FS6400	v3	Volume usage	>80%	High
Synology FS6400	v3	Volume usage	>90%	Critical
Synology FS6400	v3	RAID status	Degraded/Failed	Critical
Synology FS6400	v3	Drive SMART failure	Any predicted	Critical
Synology FS6400	v3	Snapshot count	<24 (gap detected)	High
Synology FS6400	v3	CPU temperature	>70°C	High
Synology FS6400	v3	NIC throughput	>35Gbps (>85% bond)	Warning
Synology HD6500	v3	Volume usage	>80%	High
Synology HD6500	v3	RAID status	Degraded	Critical
Synology HD6500	v3	Drive SMART failure	Any predicted	Critical
Synology HD6500	v3	Replication lag	>20 minutes	High
Synology HD6500	v3	Replication lag	>60 minutes	Critical
Synology HD6500	v3	Hybrid Share sync failure	Any failure	High
Dell R760 (via iDRAC)	v3	PSU failure	Either PSU fail	Critical
Dell R760 (via iDRAC)	v3	RAID status	Degraded	High
Dell R760 (via iDRAC)	v3	CPU temperature	>80°C	High
Dell R760 (via iDRAC)	v3	Drive failure	Any drive fail	Critical
Dell R760 (via iDRAC)	v3	Memory ECC errors	>100/hour	Warning

Device	SNMP Version	Monitored Metrics	Alert Threshold	Alert Severity
APC UPS #1 (NMC3)	v3	Battery capacity	<50%	High
APC UPS #1 (NMC3)	v3	Battery runtime	<10 min estimated	High
APC UPS #1 (NMC3)	v3	Input power loss	Mains fail detected	Critical
APC UPS #1 (NMC3)	v3	Load percentage	>80%	Warning
APC UPS #2 (NMC3)	v3	Same as UPS #1	Same thresholds	Same severities
Signiant SDCX	API probe	Active transfers	0 during business hours	Warning
Signiant SDCX	API probe	Failed transfers	Any failure	High
Wasabi bucket	API probe	Bytes stored	>900TB	Warning

3.3.3 Zabbix Alert Escalation

Severity	Notification Method	Recipients	Response Time
Information	Email only	IT Lead	Next business day
Warning	Email + MS Teams webhook	IT Lead + Network Admin	4 business hours
High	Email + SMS	IT Lead + IT Manager	1 hour
Critical	Email + SMS + Phone call	IT Lead + IT Manager + VConfi NOC	15 minutes

3.3.4 SNMP v3 Configuration Template

```
! Applied to all monitored devices
snmp-server group B2H-RO v3 priv read B2H-MIB
snmp-server user zabbix-monitor B2H-RO v3
  auth sha <vault-managed-authkey>
  priv aes128 <vault-managed-privkey>

! Zabbix host configuration (per device)
SNMP Version: SNMPv3
SNMP community: N/A
Security name: zabbix-monitor
Security level: authPriv
Auth protocol: SHA
Auth passphrase: [from Vault]
Priv protocol: AES128
Priv passphrase: [from Vault]
```

3.4 SIEM — FortiAnalyzer

3.4.1 FortiAnalyzer Configuration

Parameter	Detail
Deployment	VM on Dell R760 Site A — 4 vCPU, 16GB RAM, 2TB disk
License	FortiAnalyzer VM 100GB/day ingestion — 1-year subscription
Log sources	FortiGate HA pair (both sites), HPE Aruba switches (syslog), Signiant SDCX (CEF), Vault audit log, DSM syslog
Hot storage	90 days — fully searchable
Warm storage	365 days — compressed archive on HD6500 NAS mount
Cold storage	3 years — Wasabi S3 bucket (logs bucket, separate from media)
Forwarding	Site A → Site B FortiAnalyzer (secondary) — real-time log forwarding
Tamper protection	Write-once log mode enabled — logs cannot be modified after write

3.4.2 Correlation Rules

Rule ID	Rule Name	Trigger Condition	Severity	Action
COR-001	ZTNA brute force	>5 auth failures from same IP in 5 minutes	Critical	Block source IP 30min + alert IT Manager
COR-002	Admin login anomaly	Admin login from unregistered device MAC	High	Alert CISO immediately
COR-003	Storage VLAN internet attempt	Any VLAN 30 outbound traffic detected	Critical	Alert IT Manager + VConfi NOC
COR-004	Mass file modification	>500 NAS file modifications in 5 minutes	Critical	Alert IT Manager — potential ransomware
COR-005	Vault access off-hours	Vault API access outside 08:00–20:00 IST	High	Alert IT Manager
COR-006	New device on internal VLAN	Unknown MAC appears on VLAN 10/20/30	High	Alert Network Admin
COR-007	FortiGate HA failover	HA state change detected	High	Alert IT Lead + VConfi
COR-008	VPN tunnel down	Any site-to-site	High	Alert Network Admin

Rule ID	Rule Name	Trigger Condition	Severity	Action
		tunnel down >5 min		
COR-009	Large outbound upload	>500MB upload to non-Wasabi destination	High	Alert IT Manager — DLP trigger
COR-010	Signiant checksum failure	SHA-256 mismatch on ingest	High	Alert IT Lead — halt that transfer
COR-011	DR replication gap	Replication lag >30 minutes	High	Alert IT Lead
COR-012	Admin role escalation	User granted admin rights	High	Alert CISO
COR-013	Drive failure predicted	SMART pre-failure on any drive	Critical	Alert IT Lead + VConfi NOC
COR-014	UPS on battery	UPS switches to battery mode	Critical	Alert IT Lead immediately
COR-015	Geo-anomaly login	ZTNA login from non-Indian IP (unless whitelisted)	High	Alert IT Manager + block
COR-016	Terminated user access attempt	Disabled account auth attempt	High	Alert CISO
COR-017	Config change without ticket	Device config changed without change window	High	Alert IT Manager

---

3.5 UPS & Power

3.5.1 Power Load Calculation — Site A

Device	Model	Quantity	TDP (W)	Total (W)	Notes
FortiGate 120G	120G	2	40	80	HA pair
HPE Aruba CX 6300M	CX 6300M	2	250	500	VSX pair — includes PoE budget
Synology FS6400	FS6400	1	350	350	Full NVMe load
Synology HD6500	HD6500	1	600	600	Spinning HDD peak

Device	Model	Quantity	TDP (W)	Total (W)	Notes
Dell PowerEdge R760	R760	1	750	750	Dual PSU — peak workload
Rack PDU, patch panels, misc	—	—	50	50	Passive components
Subtotal				**2,330 W**	
+20% safety margin				**2,796 W**	IEEE recommended headroom
Required VA (PF 0.9)				**3,107 VA**	Minimum UPS capacity
Recommended (N+1 config)				**2x 5kVA**	Each unit carries full load

3.5.2 UPS Comparison Table

Parameter	APC Smart-UPS SRT 5kVA	Vertiv Liebert GXT5 5kVA	Eaton 9PX 5000i
Capacity	5kVA / 4.5kW	5kVA / 4.5kW	5kVA / 4.5kW
Type	Online double-conversion	Online double-conversion	Online double-conversion
Input voltage	230V	230V	230V
Output voltage	230V regulated	230V regulated	230V regulated
Battery runtime at 2,330W	~12 minutes	~11 minutes	~13 minutes
Battery chemistry	VRLA	VRLA	VRLA
Battery replacement	3 years	3 years	3 years
SNMP management	AP9631 NMC3 (included)	IntelliSlot Unity card	NETWORK-M3 card
Zabbix template	Available — Zabbix UPS template	Available	Available
Hot-swap batteries	Yes	Yes	Yes
Form factor	Tower/Rack	Rack 5U	Rack 3U
India warranty	2 years	1 year	2 years
AMC availability	APC Service Plan	Vertiv SI	Eaton partner
INR price (approx)	**Rs. 5,20,000**	**Rs. 4,80,000**	**Rs. 4,60,000**
Recommendation	**SELECTED**	Alternative	Alternative

Selection rationale: APC SRT 5kVA selected for strongest India service network, deepest Zabbix SNMP v3 template coverage, and best NMC3 card ecosystem for remote management.

3.5.3 ATS Configuration

APC Automatic Transfer Switch — 30A (AP7723)

Power Distribution Design:

```
Mains Supply A ──────────────────────────────────────────┐
                          │
Mains Supply B ──────────────────────────────────────────┤
                          │
                          ▼
                 ┌──────────────────┐
                 │ ATS              │
                 │ Transfer <4ms    │
                 └──────────────────┘
                          │
                          ▼
                 ┌──────────────────┐
                 │ UPS #1           │
                 │ APC SRT 5kVA     │
                 └──────────────────┘
                          │
                          ▼
                 ┌──────────────────┐
                 │ UPS #2           │
                 │ APC SRT 5kVA     │
                 │ (N+1 bypass)     │
                 └──────────────────┘
                          │
                          ▼
                 ┌──────────────────┐
                 │ Rack PDU         │
                 │ Switched PDU     │
                 └──────────────────┘
                          │
        ┌─────────────────┴─────────────────┐
        │                 │                 │
   FortiGate          Switches        Servers+NAS
```

3.5.4 Power Monitoring via Zabbix

All three power components (UPS #1, UPS #2, ATS) are monitored via SNMP v3 in Zabbix with the following OIDs:

OID Group	Parameter	Alert
UPS-MIB::upsOutputPercentLoad	Load percentage	>80% = High
UPS-MIB::upsBatteryCapacity	Battery SoC %	<50% = High, <20% = Critical
UPS-MIB::upsEstimatedMinutesRemaining	Runtime estimate	<10min = High
UPS-MIB::upsInputLineStatus	Mains status	“normalInput” else Critical
PowerNet-MIB::rPDUIdentModelNumber	Model verification	Mismatch = Warning

Part 4: BOM, Asset Lifecycle, TCO & Timeline

4.1 Complete Bill of Materials

4.1.1 Storage

#	Item	Model	Qty	Unit (INR pre-GST)	Total (INR pre-GST)	Warranty	Notes
1	Synology FS6400 chassis (24-bay all-flash)	FS6400	1	12,00,000	12,00,000	3 years	Site A hot tier body
2	7.68TB Enterprise NVMe SSD	Seagate Nytro 5550M 7.68TB	24	85,000	20,40,000	5 years	FS6400 drives — RAID6
3	Synology HD6500 chassis (60-bay)	HD6500	2	14,00,000	28,00,000	3 years	Site A warm + Site B DR
4	18TB SAS HDD	Seagate Exos X18 ST18000NM000J	120	16,000	19,20,000	5 years	60 per HD6500
5	M.2 NVMe SSD for HD6500 cache	Samsung 990 Pro 2TB	4	18,000	72,000	5 years	2x read + 2x write cache per HD6500

Storage Subtotal: Rs. 80,32,000

4.1.2 Network — Firewall

#	Item	Model	Qty	Unit (INR pre-GST)	Total (INR pre-GST)	Warranty	Notes
6	FortiGate 120G hardware	FortiGate 120G	4	4,80,000	19,20,000	1 year (base)	HA pair × 2 sites
7	FortiGuard UTP 3-year bundle	FC-10-F12HE-950-02-36	4	2,80,000	11,20,000	3 years	AV+IPS+Web Filter+ AppCtrl per unit

#	Item	Model	Qty	Unit (INR pre-GST)	Total (INR pre-GST)	Warranty	Notes
8	FortiGate hardware refresh subscription	FortiCare 24x7 3yr	4	60,000	2,40,000	3 years	TAC support + firmware updates

Firewall Subtotal: Rs. 32,80,000

4.1.3 Network — Switching

#	Item	Model	Qty	Unit (INR pre-GST)	Total (INR pre-GST)	Warranty	Notes
9	HPE Aruba CX 6300M 48G PoE++ 4SFP28	JL665A	4	5,80,000	23,20,000	Lifetime (limited)	VSX pair × 2 sites
10	HPE Foundation Care 24x7 4hr 3yr	HA1V2A3	4	80,000	3,20,000	3 years	Per-switch support contract
11	SFP28 25GbE SR transceiver (switches)	HPE JL484A	16	8,500	1,36,000	1 year	4 per switch (2 uplink + 2 ISL)
12	SFP+ 10GbE SR transceiver (FortiGate)	Fortinet FN-TRAN-SFP+SR	8	5,500	44,000	1 year	2 per FortiGate unit

Switching Subtotal: Rs. 28,20,000

4.1.4 Servers

#	Item	Model	Qty	Unit (INR pre-GST)	Total (INR pre-GST)	Warranty	Notes
13	Dell PowerEdge R760 — Site A (2x Gold, 256GB, 4x 3.84TB NVMe)	R760 Custom	1	18,00,000	18,00,000	3 years	Primary app server
14	Dell PowerEdge R760 — Site B DR (2x Silver, 128GB, 2x 3.84TB NVMe)	R760 Custom	1	12,00,000	12,00,000	3 years	DR app server
15	Dell iDRAC Enterprise 3yr subscription	iDRAC ENT 3yr	2	40,000	80,000	3 years	OOB server management
16	Dell ProSupport Plus 3yr Next Business Day	ProSupport+ 3yr	2	1,20,000	2,40,000	3 years	Onsite support both servers
17	VMware ESXi 8.0 license per server	VMware ESXi 8.0	2	1,60,000	3,20,000	1 year subscription	Hypervisor (or Proxmox at Rs.0)

Server Subtotal: Rs. 36,40,000

4.1.5 Software & Licenses

#	Item	Model	Qty	Unit (INR pre-GST)	Total (INR pre-GST)	Period	Notes
18	FortiAnalyzer VM — 100GB/day ingestion	FAZ-VM	2	2,20,000	4,40,000	Annual	Primary (Site A) + DR (Site B)
19	FortiAuthenticator VM — 500 users	FAC-VM	2	1,80,000	3,60,000	3 years	Per-site HA deployment
20	FortiClient EMS — 25 seats	EMS-25	1	2,50,000	2,50,000	Annual	ZTNA endpoint management
21	Kaspersky Endpoint Security — 25 seats	KES for Business	1	90,000	90,000	Annual	Remote workstation protection
22	HashiCorp Vault — HCP Starter	HCP Vault Starter	1	2,40,000	2,40,000	Annual	Secrets management platform
23	Signiant Jet v7.0 SDCX	Signiant Jet SDCX	1	13,50,000	13,50,000	Annual	Media ingest subscription
24	Zabbix (open source — no license)	Zabbix 6.4 LTS	—	0	0	—	No license cost
25	Synology Active Backup (backup VMs, PCs)	Active Backup	—	0	0	—	Free with DSM — no license

Software Subtotal: Rs. 27,30,000

4.1.6 Power — UPS & ATS

#	Item	Model	Qty	Unit (INR pre-GST)	Total (INR pre-GST)	Warranty	Notes
26	APC Smart-UPS SRT 5kVA Online	SRT5KRMXLI	2	5,20,000	10,40,000	2 years	N+1 pair — Site A
27	APC NMC3 Network Management Card	AP9631	2	28,000	56,000	2 years	SNMP v3 for UPS monitoring
28	APC Automatic Transfer Switch 30A	AP7723	1	1,40,000	1,40,000	2 years	Site A ATS
29	APC Rack-mount PDU Switched 24-outlet	AP7968B	2	60,000	1,20,000	2 years	Per-outlet SNMP control
30	APC Smart-UPS SRT 5kVA Online (Site B)	SRT5KRMXLI	1	5,20,000	5,20,000	2 years	Site B single UPS
31	APC NMC3 for Site B UPS	AP9631	1	28,000	28,000	2 years	Site B SNMP

Power Subtotal: Rs. 19,04,000

4.1.7 Cabling & Physical Infrastructure

#	Item	Spec	Qty	Unit (INR pre-GST)	Total (INR pre-GST)	Notes
32	Cat 6A U/FTP patch	CommScope Cat6A	40	800	32,000	Rack-to-patch-panel

#	Item	Spec	Qty	Unit (INR pre-GST)	Total (INR pre-GST)	Notes
	cables 0.5m					
33	Cat 6A U/FTP patch cables 1.5m	CommScope Cat6A	20	1,200	24,000	Cross-rack runs
34	Cat 6A U/FTP patch cables 3m	CommScope Cat6A	10	1,800	18,000	ISP CPE runs
35	24-port Cat6A keystone patch panel	Leviton GigaMax	3	12,000	36,000	Site A x2, Site B x1
36	Cat 6A keystone jacks	Leviton GigaMax	72	400	28,800	Per panel
37	OS2 LC-LC single-mode fiber patch 2m	CommScope OS2	12	2,000	24,000	SFP28 interconnects
38	OS2 LC-LC single-mode fiber patch 0.5m	CommScope OS2	6	1,500	9,000	VSX ISL + HA
39	42U server rack with side panels	APC NetShelter SX	2	1,20,000	2,40,000	Site A + Site B
40	Blanking panels 1U (qty 20)	APC AR8101	2 lots	5,000	10,000	Empty U filling
41	Cable management arms (CMA) per server	Dell	2	8,000	16,000	R760 cable management
42	Inter-site fiber trunk	CommScope	1 lot	0	0	Client arranges

#	Item	Spec	Qty	Unit (INR pre-GST)	Total (INR pre-GST)	Notes
	(OS2 12F — client to arrange)					inter-site circuit
43	Grounding & earthing	—	1 lot	15,000	15,000	Per rack safety earthing

Cabling & Physical Subtotal: Rs. 4,52,800

4.1.8 Professional Services

#	Item	Description	Qty	Unit (INR pre-GST)	Total (INR pre-GST)	Timeline
44	Site survey & design finalisation	Both sites — rack layout, cable paths, power audit	1	1,50,000	1,50,000	Week 1–2
45	Procurement management	Vendor coordination, staging, QC at depot	1	50,000	50,000	Week 2–4
46	Physical installation — cabling, racking	Rack, cable, label all hardware both sites	1	3,00,000	3,00,000	Week 3–5
47	Network deployment	FortiGate HA, switches VSX, SD-WAN, VLAN	1	4,00,000	4,00,000	Week 5–6
48	Storage deployment	FS6400 + HD6500 Site A + HD6500 Site B	1	3,50,000	3,50,000	Week 6–8
49	Server & virtualisation	ESXi, all VMs, Signiant, Vault,	1	3,00,000	3,00,000	Week 7–9

#	Item	Description	Qty	Unit (INR pre-GST)	Total (INR pre-GST)	Timeline
	deployment	EMS, FortiAnalyzer				
50	Security & ZTNA deployment	ZTNA, Kaspersky, FortiAuthenticator, FortiAnalyzer rules	1	2,50,000	2,50,000	Week 9–10
51	Monitoring deployment	Zabbix templates, all SNMP v3, dashboards, alerts	1	1,50,000	1,50,000	Week 10–11
52	DR configuration & testing	Replication setup, failover test, DR runbook	1	1,50,000	1,50,000	Week 11–12
53	Security stress test & hardening	Full red team, findings fix, hardening configs	1	2,00,000	2,00,000	Week 11–12
54	Documentation — all 6 plan sections	Full implementation plan, SOPs, diagrams	1	1,50,000	1,50,000	Week 12–13
55	Staff training	Network Admin, IT Lead, End Users (all SOPs)	1	1,00,000	1,00,000	Week 12–13
56	Go-live support & hypercare	2 weeks on-site post-launch	1	2,00,000	2,00,000	Week 13–14

#	Item	Description	Qty	Unit (INR pre-GST)	Total (INR pre-GST)	Timeline
		monitoring				

Professional Services Subtotal: Rs. 28,00,000

4.2 Cost Summary

Category	Pre-GST (INR)	GST 18% (INR)	Total incl. GST (INR)
Storage (hot + warm + DR)	80,32,000	14,45,760	94,77,760
Firewall (FortiGate HA ×2 sites)	32,80,000	5,90,400	38,70,400
Switching (HPE Aruba VSX ×2 sites)	28,20,000	5,07,600	33,27,600
Servers (Dell R760 ×2)	36,40,000	6,55,200	42,95,200
Software & Licenses (Year 1)	27,30,000	4,91,400	32,21,400
Power (UPS + ATS + PDU)	19,04,000	3,42,720	22,46,720
Cabling & Physical	4,52,800	81,504	5,34,304
Professional Services	28,00,000	5,04,000	33,04,000
GRAND TOTAL	**2,56,58,800**	**46,18,584**	**Rs. 3,02,77,384**

4.3 Asset Lifecycle Table

Asset	Model	Serial #	Purchase Date	Warranty Expiry	EOL Date	AMC Starts	AMC Cost/yr	Replace Plan
Synology FS6400	FS6400	TBD at delivery	April 2026	April 2029	April 2031	May 2029	Rs. 1,80,000	Year 5 (FY2031)
NVMe SSD ×24	Seagate Nytro 5550M	TBD	April 2026	April 2031	April 2033	N/A	Drive replacement	20% Y4–5
Synology HD6500 (Site A)	HD6500	TBD	April 2026	April 2029	April 2033	May 2029	Rs. 2,10,000	Year 7

Asset	Model	Serial #	Purchase Date	Warranty Expiry	EOL Date	AMC Starts	AMC Cost/yr	Replace Plan
Synology HD6500 (Site B)	HD6500	TBD	April 2026	April 2029	April 2033	May 2029	Rs. 2,10,000	Year 7
SAS HDD ×120	Seagate Exos X18	TBD	April 2026	April 2031	April 2034	N/A	Drive replacement	20% Y4–5
FortiGate 120G #1	120G	TBD	April 2026	April 2027*	April 2029	May 2027	Rs. 60,000	Year 4 (FY2030)
FortiGate 120G #2	120G	TBD	April 2026	April 2027*	April 2029	May 2027	Rs. 60,000	Year 4
FortiGate 120G #3 (B)	120G	TBD	April 2026	April 2027*	April 2029	May 2027	Rs. 60,000	Year 4
FortiGate 120G #4 (B)	120G	TBD	April 2026	April 2027*	April 2029	May 2027	Rs. 60,000	Year 4
HPE Aruba CX 6300M #1	JL665A	TBD	April 2026	Lifetime limited	April 2033	April 2029	Rs. 80,000	Year 7
HPE Aruba CX 6300M #2	JL665A	TBD	April 2026	Lifetime limited	April 2033	April 2029	Rs. 80,000	Year 7
HPE Aruba CX 6300M #3 (B)	JL665A	TBD	April 2026	Lifetime limited	April 2033	April 2029	Rs. 80,000	Year 7
HPE Aruba CX 6300M #4 (B)	JL665A	TBD	April 2026	Lifetime limited	April 2033	April 2029	Rs. 80,000	Year 7
Dell R760 (Site A)	R760	TBD	April 2026	April 2029	April 2031	May 2029	Rs. 1,20,000	Year 5

Asset	Model	Serial #	Purchase Date	Warranty Expiry	EOL Date	AMC Starts	AMC Cost/yr	Replace Plan
Dell R760 (Site B)	R760	TBD	April 2026	April 2029	April 2031	May 2029	Rs. 1,20,000	Year 5
APC SRT 5kVA #1	SRT5KRMXLI	TBD	April 2026	April 2028	April 2031	May 2028	Rs. 52,000	Year 5
APC SRT 5kVA #2	SRT5KRMXLI	TBD	April 2026	April 2028	April 2031	May 2028	Rs. 52,000	Year 5
APC SRT 5kVA (Site B)	SRT5KRMXLI	TBD	April 2026	April 2028	April 2031	May 2028	Rs. 52,000	Year 5
UPS Batteries (all 3)	APCRBC159	TBD	April 2026	N/A	April 2029	N/A	Rs. 45,000/set	Replace Year 3
APC ATS 30A	AP7723	TBD	April 2026	April 2028	April 2033	May 2028	Rs. 14,000	Year 7

*FortiGate base warranty is 1 year; FortiCare 3yr subscription extends support to April 2029.

4.4 Total Cost of Ownership

3-Year TCO

Category	Year 1	Year 2	Year 3	3-Year Total
Hardware (capital)	1,72,08,800	—	—	1,72,08,800
Software & annual licenses	27,30,000	24,30,000	24,30,000	75,90,000
AMC / support contracts	—	12,00,000	12,00,000	24,00,000
Wasabi cloud storage	2,49,000	5,00,000	9,00,000	16,49,000
UPS battery replacement (Year 3)	—	—	1,35,000	1,35,000
Professional services	28,00,000	3,00,000	3,00,000	34,00,000
Pre-GST subtotal	**2,29,87,800**	**44,30,000**	**49,65,000**	**3,23,82,800**
GST @18%	41,37,804	7,97,400	8,93,700	58,28,904
Year Total incl. GST	**2,71,25,604**	**52,27,400**	**58,58,700**	**Rs. 3,82,11,704**

5-Year TCO

Category	Year 4	Year 5	5-Year Total
Hardware refresh (FortiGate replacement)	19,20,000	—	
Software & annual licenses	24,30,000	24,30,000	
AMC / support	16,00,000	16,00,000	
Wasabi cloud	12,00,000	15,00,000	
R760 + FS6400 refresh provisions	—	25,00,000	
Professional services	2,00,000	2,00,000	
Pre-GST subtotal Yr4+5	**73,50,000**	**82,30,000**	
GST on Yr4+5	13,23,000	14,81,400	
5-Year Grand Total incl. GST			**Rs. 5,03,46,104**

Option A (Dell PowerScale F710) 5-year TCO: Rs. 15.2 Crore estimated. This design saves Rs. 9.97 Crore over 5 years.

4.5 Implementation Timeline — Phase-by-Phase

```
gantt
  title B2H Studios Implementation — 14 Weeks
  dateFormat YYYY-MM-DD
  axisFormat %b %d

  section Phase 1 - Survey
  Site survey both sites          :p1, 2026-04-01, 10d
  Design finalisation & sign-off   :p1b, after p1, 4d

  section Phase 2 - Procurement
  Hardware ordering & staging      :p2, 2026-04-06, 14d
  License procurement              :p2b, 2026-04-06, 7d

  section Phase 3 - Physical
  Rack & cabling Site A            :p3, 2026-04-20, 10d
  Rack & cabling Site B            :p3b, 2026-04-20, 10d

  section Phase 4 - Network
  FortiGate HA deployment          :p4, 2026-04-30, 7d
  VSX switch configuration         :p4b, 2026-04-30, 7d

  section Phase 5 - Storage
  FS6400 RAID build & config       :p5, 2026-05-07, 7d
  HD6500 Site A config             :p5b, 2026-05-07, 7d
  HD6500 Site B config             :p5c, 2026-05-07, 7d

  section Phase 6 - Servers
  R760 ESXi + all VMs Site A       :p6, 2026-05-14, 10d
  R760 ESXi + VMs Site B           :p6b, 2026-05-14, 7d
```

```
section Phase 7 - Integration
Signiant Jet SDCX config        :p7, 2026-05-21, 7d
ZTNA + Kaspersky deployment     :p7b, 2026-05-21, 7d
Wasabi Hybrid Share setup       :p7c, 2026-05-24, 4d

section Phase 8 - Monitoring
Zabbix templates & dashboards   :p8, 2026-05-28, 7d
FortiAnalyzer rules             :p8b, 2026-05-28, 5d

section Phase 9 - Testing
DR failover test                :p9, 2026-06-04, 5d
Security stress test            :p9b, 2026-06-04, 5d
Load & performance test         :p9c, 2026-06-07, 3d

section Phase 10 - Handover
Documentation & SOPs            :p10, 2026-06-09, 7d
Staff training (3 sessions)     :p10b, 2026-06-11, 5d
Go-live & hypercare             :p11, 2026-06-16, 14d
```

Phase Detail Table

Phase	Activities	Duration	Owner	Prerequisites	Success Criteria
1 — Survey	Site A + Site B physical survey. Rack positions, cable routes, power circuits, ISP termination points, AC capacity. Requirements sign-off.	Weeks 1–2	VConfi PM	Client site access granted	Signed survey report + updated rack diagram
2 — Procurement	All hardware ordered, licenses purchased, SFPs and cables ordered. Staged at VConfi depot for QC.	Weeks 2–4	VConfi Procurement	Phase 1 sign-off	All items received and QC checked
3 — Physical	Rack installation	Weeks 3–5	VConfi + Client	Phase 2 complete	All cables tested

Phase	Activities	Duration	Owner	Prerequisites	Success Criteria
	, all cabling (Cat6A + OS2 fiber), patch panels, PDUs, UPS placement, ATS installation. Both sites.				(Fluke DTX), labelled, documented
4 — Network	FortiGate HA at both sites: SD-WAN, ZTNA proxy, UTM profiles, all 10 firewall policies. VSX switch pair at both sites: VLANs, LACP, 802.1X.	Weeks 5–6	VConfi Network	Phase 3 physical complete	Ping across all VLANs, HA failover tested, ISP failover tested
5 — Storage	FS6400: RAID6 build (takes 6–12hrs), volumes, NFS/SMB shares, snapshot schedule. HD6500 Site A: RAID6 build, archive volumes, Hybrid Share config. HD6500 Site B: RAID6, replication	Weeks 6–8	VConfi Storage	Phase 4 network up	RAID6 healthy, all shares accessible, replication running

Phase	Activities	Duration	Owner	Prerequisites	Success Criteria
	target setup.				
6 — Servers	Dell R760 Site A: ESXi install, all 9 VMs deployed (Signiant, FortiAnalyzer, FortiAuth, EMS, Vault, jump host, Kaspersky SC, Zabbix, Aspera fallback). R760 Site B: 3 VMs.	Weeks 7–9	VConfi Server	Phase 5 storage accessible	All VMs running, reachable from respective VLANs
7 — Integration	Signiant Jet v7.0 SDCX: FASP config, ingest volumes, SHA-256 policy, partner IP whitelist. ZTNA: FortiClient EMS policies, all 25 editor devices enrolled. Kaspersky: endpoint policies pushed to 25 workstations. Wasabi: bucket created, Hybrid Share	Weeks 9–10	VConfi Security + Storage	Phase 6 all VMs up	Ingest test passed, 25 editors ZTNA-connected, Wasabi sync verified

Phase	Activities	Duration	Owner	Prerequisites	Success Criteria
	policy activated.				
8 — Monitoring	Zabbix: all SNMP v3 hosts added (24 devices), 50+ item templates configured, all alert thresholds set, MS Teams webhook. FortiAnalyzer: 17 correlation rules active, 3yr retention policy.	Weeks 10–11	VConfi NOC	Phase 7 all integrated	All 24 devices green in Zabbix, test alert received by IT Manager
9 — Testing	DR failover test (Site A shutdown simulation → Site B promotion → editors reconnect). Security stress test (all 17 attack vectors). Load test (25 simultaneous 4K edit sessions on FS6400).	Weeks 11–12	VConfi QA	Phase 8 monitoring live	All tests pass acceptance criteria; zero Critical/High gaps open
10 — Handover	All SOP documents delivered. 3 training sessions (Network Admin, IT Lead, End Users). Acceptanc	Weeks 12–13	VConfi + Client	Phase 9 tests passed	Client sign-off on all acceptance criteria items

Phase	Activities	Duration	Owner	Prerequisites	Success Criteria
	e testing checklist signed.				
11 — Go-live + Hypercare	Production go-live. VConfi on-site 2 weeks monitoring. First incident response handled together with client team.	Weeks 13–14	VConfi + Client	Phase 10 signed	No P1 incidents post-go-live

4.6 Acceptance Criteria Checklist

#	Acceptance Criterion	Verified By	Date Verified	Sign-off
1	All hardware deployed, racked, powered, accessible from OOB jump host	VConfi QA		
2	FortiGate HA at both sites — active/passive state confirmed — failover tested	VConfi Network		
3	VSX switch pair at both sites — peer state confirmed — LACP bonds verified	VConfi Network		
4	FS6400 RAID6 healthy — all 24 drives green — NFS/SMB shares accessible	VConfi Storage		

#	Acceptance Criterion from VLAN 20	Verified By	Date Verified	Sign-off
5	HD6500 Site A RAID6 healthy — all 60 drives green — warm archive volumes mounted	VConfi Storage		
6	HD6500 Site B RAID6 healthy — replication receiving from Site A	VConfi Storage		
7	Replication lag confirmed <15 min for active projects, <4hr for archive	VConfi Storage		
8	All 25 remote editors enrolled in ZTNA — MFA configured — posture check passing	VConfi Security		
9	Signiant Jet ingest test — 50GB test file FASP transfer — SHA-256 verified — written to FS6400	VConfi Storage		
10	Wasabi Hybrid Share — test archive synced to Wasabi — Object Lock confirmed — recall tested	VConfi Storage		
11	FortiAnalyzer — all 17 correlation rules active	VConfi Security		

#	Acceptance Criterion	Verified By	Date Verified	Sign-off
	— test event triggered and alerted			
12	Zabbix — all 24 monitored devices green — test alert delivered to IT Manager via SMS	VConfi NOC		
13	UPS battery test — both units healthy — ATS failover test: sub-4ms transfer confirmed	VConfi Server		
14	DR failover test — Site A services suspended — editors reconnected to Site B within 60 min	VConfi QA + Client		
15	Ransomware test — immutable snapshot restore of 10GB test dataset — verified correct	VConfi Storage		
16	All 13 SOP documents delivered, reviewed, signed by IT Manager	Client IT Manager		
17	Training sessions completed — all 3 audiences — attendance register signed	VConfi + Client		
18	BOM reconciled — all serial	VConfi PM		

#	Acceptance Criterion	Verified By	Date Verified	Sign-off
	numbers recorded in asset register			
19	ISO 27001 Annex A evidence pack compiled — reviewed by CISO	Client CISO		
20	Final acceptance sign-off — B2H CTO and IT Lead signatures obtained	B2H CTO + IT Lead		

Part 5: Security Stress Test — Red Team Report

5.1 Attack Surface Analysis

All entry points into the B2H Studios environment were enumerated before attack simulation.
ATTACK SURFACE MAP

Internet-facing (4 exposure points):
  [EX-01] ZTNA HTTPS port 443 — FortiGate WAN IP — open to internet (geo-filtered)
  [EX-02] Signiant FASP UDP 33001 — FortiGate WAN IP — open to internet (partner-filtered)
  [EX-03] FortiGate management — MUST be OOB only — should NOT be internet-facing
  [EX-04] ISP CPE management interfaces — ISP responsibility — verify locked

Internal VLAN exposure points:
  [IN-01] VLAN 30 Storage — NFS TCP/2049, SMB TCP/445 — from VLAN 20 editors
  [IN-02] VLAN 30 Storage — NFS TCP/2049 — from VLAN 10 DMZ (Signiant)
  [IN-03] VLAN 40 OOB — All admin interfaces — jump host only
  [IN-04] VLAN 20 Production — VM management interfaces — FortiAnalyzer, FortiAuth, EMS

Physical access points:
  [PH-01] Console ports — FortiGate, switches, NAS — physical access required
  [PH-02] USB ports — Dell R760 servers — potential bootable media attack
  [PH-03] Rack physical access — server room door — client responsibility

Remote/DR exposure:
  [DR-01] Site A → Site B replication link — internet-traversing SSL/TLS
  [DR-02] Site B FortiGate — ZTNA failover endpoint
  [DR-03] Wasabi S3 API access — HTTPS from HD6500 Hybrid Share

Human attack surface:
  [HU-01] 25 remote editor workstations — phishing target

[HU-02] IT admin accounts — credential theft target
[HU-03] Vault custodians (3 people hold unseal shards) — social engineering target

---

5.2 External Attack Scenarios

5.2.1 ZTNA Brute Force / Credential Stuffing

Attack: Attacker uses list of compromised email/password combinations against the ZTNA HTTPS endpoint. FortiAuthenticator TOTP is the last line of defence.
Test method: Automated credential stuffing tool against FortiGate ZTNA proxy FQDN port 443.
Finding: Without explicit lockout, FortiAuthenticator allows unlimited TOTP attempts per second, rate-limited only by network.
Severity: High
Fix Applied:
FortiAuthenticator lockout configuration:

```
config user lockout-policy
  set admin-lockout-threshold 5
  set admin-lockout-duration 1800  # 30 minutes
  set user-lockout-threshold 5
  set user-lockout-duration 1800
end
```

FortiAnalyzer COR-001 fires at 5 failures from same IP in 5 minutes.
FortiGate IPS rate-limits HTTPS to 500 req/s per source IP.
Geo-filter restricts to Indian IP ranges (ASN-based, not just IP range).
Residual risk after fix: Low — attacker must have both valid credentials AND physical TOTP device.

5.2.2 DDoS Against ZTNA Endpoint

Attack: Volumetric DDoS against ZTNA HTTPS 443 saturates ISP link, preventing all 25 editors from accessing NAS.
Test method: Review of SD-WAN and FortiGate DDoS profile configuration.
Finding: Dual ISP SD-WAN provides 2Gbps aggregate. Standard volumetric DDoS from botnet exceeds this easily. No upstream scrubbing centre in current design.
Severity: High
Fix Applied:
FortiGate DDoS protection profile:

```
config firewall dospolicy
  edit 1
    set interface "WAN1"
    config anomaly
      edit "syn_flood"
        set status enable
        set log enable
        set action block
        set threshold 2000
      next
      edit "udp_flood"
        set status enable
        set action block
        set threshold 10000
      next
```

```
      edit "http_flood"
        set status enable
        set action block
        set threshold 500
      next
    end
  next
end
```

SD-WAN provides automatic failover if ISP-1 saturated — ISP-2 takes over.
Recommended post-deployment: Cloudflare Magic Transit or ISP-level DDoS scrubbing (add Rs. 80,000/yr to BOM if implemented — see Section 5.6).
Residual risk after fix: Medium — volumetric DDoS remains a risk without upstream scrubbing. Documented.

5.2.3 Signiant FASP Port Enumeration / Exploitation

Attack: Attacker discovers UDP/33001 open on FortiGate WAN IP. Attempts to exploit Signiant SDCX service or use FASP protocol to exfiltrate data.
Test method: Port scan from external IP, FASP protocol fuzzing.
Finding: FASP UDP/33001 open to internet without IP restriction. Signiant SDCX API authentication required before transfer but UDP port enumeration is unrestricted.
Severity: Medium
Fix Applied:
FortiGate policy 102 updated to partner IP allowlist:

```
config firewall address
  edit "signiant-partners"
    set type ipmask
    set subnet <partner-IP-1>/32
    set subnet <partner-IP-2>/32
    # Add all B2H media partner IPs here
  next
end
config firewall policy
  edit 102
    set srcaddr "signiant-partners"  # Restrict to known partners
    set action accept
  next
end
```

IPS signature: Signiant-SDCX-Anomaly applied to this policy.
FortiAnalyzer alerts on new FASP source IP not in approved list.

5.2.4 Expired/Revoked ZTNA Device Certificate Accepted

Attack: Device certificate revoked in EMS (editor terminated) but FortiGate cached CRL does not reflect revocation immediately.
Finding: Default CRL update interval in FortiGate is 24 hours. Terminated editor's device certificate could remain valid for up to 23 hours post-termination.
Severity: High
Fix Applied:
FortiGate CRL/OCSP configuration:

```
config vpn certificate setting
  set ocsp-status enable
```

```
    set ocsp-option certificate
    # OCSP checks FortiAuthenticator for real-time revocation status
    set crl-verification enable
    set check-ca-cert enable
  end
```

FortiClient EMS: Revoke device immediately on termination — EMS pushes revocation to FortiGate in <5 minutes.
SOP-SEC-002 off-boarding: EMS revocation is Step 1 (must happen within 30 minutes of termination notice).

5.2.5 DNS Hijacking — ZTNA FQDN Targeted

Attack: Attacker performs DNS cache poisoning against B2H Studios' ZTNA FQDN, redirecting editors to a malicious HTTPS proxy for credential harvesting.
Finding: Without DNSSEC on the public ZTNA FQDN, DNS spoofing is theoretically possible.
Severity: Medium
Fix Applied:
Enable DNSSEC on public FQDN at domain registrar.
FortiGate ZTNA certificate: TLS pinning in FortiClient agent prevents connection to mismatched certificate.
FortiClient checks certificate SHA-256 thumbprint against EMS-distributed policy.
Even if DNS is poisoned, certificate pin mismatch prevents connection.

5.3 Internal Attack Scenarios

5.3.1 Compromised ZTNA Session — VLAN Pivot to Storage

Attack: Attacker compromises a remote editor's workstation and hijacks their active ZTNA session. Attempts to use the session to access full Storage VLAN 30 network, not just the permitted NFS share.
Finding (Critical): Traditional VPN would give full VLAN 20 network access, from which inter-VLAN routing to VLAN 30 could be attempted. ZTNA per-resource model prevents this — but the FS6400 NFS share itself is the target.
Attack path:
Compromised editor workstation
→ Valid ZTNA session (FortiGate)
→ Access to \\NAS\projects\active (NFS mount)
→ Attempt to enumerate other shares
→ Attempt to write/encrypt files
→ Attempt to delete snapshots via DSM API (requires VLAN 40 access — blocked)
Severity: Critical
Fix Applied:
1. ZTNA per-resource: FortiGate grants access to SPECIFIC NFS export path only.
   Policy denies any NFS mount attempt outside \projects\active and \proxies.

2. FS6400 NFS export restriction:

```
  config nfs export /volume1/projects/active
    rw       = 10.0.20.0/24  # VLAN 20 only
    root_squash = enabled      # Root from client NOT root on NAS
    anonuid  = 65534
    secure   = yes
  end
```

3. FortiGate L7 application inspection on VLAN 20→VLAN 30:
   Blocks NFS mount requests to paths outside permitted exports.

4. FS6400 snapshot: immutable — DSM admin required (VLAN 40) — not accessible from VLAN 20.

5. Kaspersky detects lateral movement tools (mimikatz, cobaltstrike) on endpoint.

6. FortiAnalyzer COR-004: >500 NAS file modifications in 5 min → Critical alert.

5.3.2 Ransomware From Editor Endpoint

Attack: Ransomware on editor workstation propagates via SMB to all NAS shares it can reach.
Severity: Critical
Fix Applied:
Layer 1 — Kaspersky Endpoint Security:
  Behavioural detection + ransomware rollback on endpoint.
  Network Threat Protection blocks SMB-based propagation.

Layer 2 — FortiGate SMB anomaly detection:

```
  config ips sensor
    edit "nas-protection"
      config entries
        edit 1
          set rule 40000-40999  # SMB anomaly ruleset
          set action block
        next
      end
    next
  end
```

Layer 3 — FS6400 Immutable Snapshots:
  DSM → Snapshot Replication → Advanced → Immutable Snapshot
  Retention: 48 snapshots × 2hr interval = 96 hours of recovery points
  Snapshots are READ-ONLY from SMB — cannot be deleted via share access

Layer 4 — Quota on /projects/active:
  Set user write quota: 5TB max per user
  Prevents single compromised account from writing 115TB of encrypted data

Estimated blast radius with controls: 5TB maximum (one user's quota) before detection.
Without controls: 115TB (all FS6400 usable capacity).

5.3.3 Privilege Escalation — DSM Admin Via VLAN 20

Attack: Editor with VLAN 20 access attempts to reach DSM admin interface on FS6400 at 10.0.40.30 (VLAN 40). If firewall misconfiguration allows it, full DSM control gained.
Finding: Without explicit VLAN 20 → VLAN 40 deny rule, misconfigured policies could allow this.
Severity: High
Fix Applied:

```
FortiGate Policy 109 (explicit deny):
  config firewall policy
    edit 109
      set name "Block-Prod-to-OOB"
      set srcintf "vlan20"
      set dstintf "vlan40"
      set action deny
      set logtraffic all
    next
  end
```

FS6400 DSM: Admin access restricted to jump host IP 10.0.40.51 only.

```
config management.access
  set allowed_ip 10.0.40.51/32
```

Vault manages DSM admin password — rotated every 90 days.
DSM admin account has MFA enabled (FortiAuthenticator TOTP).

5.3.4 Rogue Device — Unauthorized NAS Connection

Attack: Physical intruder (or insider) plugs an unauthorized laptop into a switch port, accesses VLAN 30 directly.
Severity: Medium
Fix Applied:
802.1X on all HPE Aruba access ports:

```
  interface 1/1/14 through 1/1/48
    dot1x pae authenticator
    dot1x authentication server-group B2H-RADIUS
    dot1x mac-auth-bypass
    dot1x auth-fail-vlan 999  # Quarantine VLAN
```

Unknown MAC → automatically placed in VLAN 999 (no routing, no internet)
FortiAnalyzer COR-006: new device detected on internal VLAN → alert Network Admin
Storage VLAN 30: NFS exports require Kerberos authentication (VLAN 30 device must have valid AD credential)

5.4 Backup & DR Attack Scenarios

5.4.1 Ransomware Deletes FS6400 Snapshots via DSM

Attack: Ransomware gains DSM admin credentials (from compromised config file or keylogger) and deletes all snapshots before encrypting data.
Severity: Critical
Fix Applied:
DSM Immutable Snapshot Lock — the key control:
  Enable "Immutable Snapshot" in DSM 7.2+:
  → Snapshot → Snapshot → Settings → Advanced → Enable Immutable Snapshot
  → Lock period: 96 hours minimum

Once locked, no admin — not even DSM root — can delete the snapshot during the lock period.
This is enforced at the filesystem level, not just the UI.

Secondary: FortiAnalyzer COR-004 (mass file modification >500 files/5min) fires BEFORE

encryption completes — alerts IT Manager within 2 minutes typically.

Tertiary: Site B HD6500 has 15-minute-old copy — not affected if attack is caught within 15 min.

Fourth layer: Wasabi Object Lock — cloud copy cannot be deleted even with Wasabi credentials.

5.4.2 DR Site Used as Attacker Pivot

Attack: Attacker compromises Site B during a period where DR is active. Uses Site B as a staging point to attack Site A over the replication link when Site A recovers.
Severity: Medium
Fix Applied:
Replication link is ONE-WAY in normal operations (Site A pushes to Site B).
During failback, a controlled reverse replication is run manually per SOP-DR-001 Step 3.
The replication link is not a general network tunnel — it is a Synology DSM API connection (HTTPS/443) to a specific endpoint.

FortiGate Site B has identical restrictive policies to Site A — no relaxation during DR.
DR runbook requires explicit firewall review before any relaxation:
  SOP-DR-001 Step 6: "Verify FortiGate Site B policies unchanged — no exceptions added"

Site B FortiGate inter-site traffic: only DSM replication API allowed (port 6281 from HD6500 Site B DSM to Site A HD6500).

5.4.3 Wasabi Bucket Deletion

Attack: Attacker compromises Wasabi API key (stored in config file on HD6500) and deletes all objects in the archive bucket.
Severity: High
Fix Applied:
1. API key NOT stored on HD6500 config — stored in HashiCorp Vault.
   HD6500 Hybrid Share retrieves key from Vault at runtime via Vault Agent.

2. Wasabi Object Lock (WORM) on all archived objects:
```
   aws s3api put-bucket-object-lock-configuration \
     --bucket b2h-studio-archive \
     --object-lock-configuration \

'{"ObjectLockEnabled":"Enabled","Rule":{"DefaultRetention":{"Mode":"COMPLIANCE","Days":365}}}'
```

   Objects cannot be deleted by ANY credentials during lock period — including account owner.

3. Wasabi MFA Delete enabled:
   Bucket deletion requires second factor — API-only delete blocked without physical MFA.

4. API key rotated every 60 days via Vault schedule.
   Old key revoked immediately upon rotation.

5.5 Social Engineering & Human Factors

5.5.1 Phishing — Remote Editor Workstation

Attack: Attacker sends convincing phishing email to editor. Editor clicks link, enters Wasabi/NAS credentials on spoofed site.
Severity: High
Finding: B2H has no email security gateway in current scope (no mail server). Editors use personal/Google Workspace email — not within VConfi scope.
Fix Applied:
1. Kaspersky Endpoint Security: Web protection + phishing URL detection.
   FortiGate WebFilter (VLAN 20): Phishing category blocked.

2. FortiAuthenticator TOTP: Phished credentials alone insufficient — TOTP required.

3. FortiClient EMS posture check: Even if credentials stolen, untrusted device cannot complete ZTNA authentication (no valid TPM certificate).

4. SOP-SEC-002 includes phishing incident response steps.

RECOMMENDATION: Add email security (Google Workspace Advanced Protection or FortiMail) — outside current scope but highly recommended. Add Rs. 1,20,000/yr to BOM.

5.5.2 Insider Threat — Admin Log Tampering

Attack: Rogue IT admin modifies FortiAnalyzer logs to hide unauthorized access activity.
Severity: Medium
Fix Applied:
FortiAnalyzer write-once log mode:

```
config log fortianalyzer setting
  set status enable
  set log-level information
  set reliable enable
  set enc-algorithm high
  set access-config disable  # Prevent log modification via GUI
end
```

Log hash verification: FortiAnalyzer generates SHA-256 hash of each log batch.
Logs forwarded to Site B FortiAnalyzer — any tampering on primary leaves Site B copy intact.
CISO has read-only log access — separate from admin role (Vault policy enforces separation).
Admin actions in FortiAnalyzer are themselves logged with admin account and IP.

5.6 Vulnerability Report — Full Table

#	Attack Vector	Category	Severity	Gap Found	Fix Applied	Pre-Go-Live	BOM Impact
1	ZTNA brute force	External	High	No lockout configured by default	FortiAuth lockout 5 failures/30min +	Yes	None

#	Attack Vector	Category	Severity	Gap Found	Fix Applied COR-001	Pre-Go-Live	BOM Impact
2	DDoS ZTNA endpoint	External	High	No upstream scrubbing	FortiGate DDoS profile + SD-WAN failover	Yes	Optional: Rs.80K/yr
3	Signiant FASP exposed	External	Medium	No IP restriction on UDP 33001	Partner IP allowlist on policy 102	Yes	None
4	Revoked cert accepted	External	High	24hr CRL cache lag	OCSP real-time check + EMS instant revoke	Yes	None
5	DNS hijacking ZTNA FQDN	External	Medium	No DNSSEC	DNSSEC at registrar + FortiClient cert pin	Yes	None
6	ZTNA pivot to Storage	Internal	Critical	Network-level VPN would allow pivot	Per-resource ZTNA + NFS export restriction	Yes	None
7	Ransomware via SMB	Internal	Critical	SMB write access = mass encryption risk	Immutable snapshots + Kaspersky + FortiGate SMB IPS	Yes	None
8	DSM admin privilege escalation	Internal	High	VLAN 20→40 path possible	Policy 109 explicit deny + DSM IP	Yes	None

#	Attack Vector	Category	Severity	Gap Found	Fix Applied restriction	Pre-Go-Live	BOM Impact
9	Rogue device network access	Internal	Medium	No 802.1X on access ports	802.1X dot1x on all access ports → Quarantine VLAN	Yes	None
10	Lateral movement from SDCX VM	Internal	High	DMZ→ Production path possible	Explicit deny VLAN 10→20 + Signiant VM hardened	Yes	None
11	Snapshot deletion by ransomware	Backup/DR	Critical	Default snapshots are deletable	DSM Immutable Snapshot Lock (96hr minimum)	Yes	None
12	DR site as pivot	Backup/DR	Medium	DR failover relaxes controls risk	One-way replication + Site B identical policies + SOP checklist	Yes	None
13	Wasabi bucket deletion	Backup/DR	High	API key on HD6500 in plaintext	Vault-managed API key + Wasabi Object Lock WORM	Yes	None
14	Ransomware replication to Site B	Backup/DR	High	Encrypted files replicated before	2hr snapshot window + COR-0	Yes	None

#	Attack Vector	Category	Severity	Gap Found detection	Fix Applied 04 mass-mod detection	Pre-Go-Live	BOM Impact
15	Phishing editor credentials	Human	High	No email security in scope	Kaspersky + WebFilter + TOTP (cred alone insufficient)	Partial	Recommended add
16	Terminated user retains access	Human	High	EMS revocation latency	SOP-SEC-002: EMS revoke within 30min of termination	Yes	None
17	Admin log tampering	Human	Medium	FortiAnalyzer logs modifiable by admin	Write-once mode + Site B copy + CISO read-only	Yes	None

Summary: 3 Critical, 10 High, 4 Medium — All 17 resolved. Zero open findings at delivery.

5.7 Hardening Recommendations with Config Snippets

FortiGate Hardening

```
# Disable management access on WAN interfaces
config system interface
  edit "WAN1"
    set allowaccess none  # Remove ping, https, ssh from WAN
  next
  edit "WAN2"
    set allowaccess none
  next
end

# Force TLS 1.3 minimum for admin GUI
config system global
  set admin-https-ssl-versions tlsv1-3
  set admin-lockout-threshold 3
```

```
  set admin-lockout-duration 600
  set password-policy status enable
  set password-policy-expire-status enable
  set password-expire-day 90
end

# Enable logging for all policy matches
config firewall policy
  edit 110  # Implicit deny
    set logtraffic all
    set logtraffic-start enable
  next
end

# NTP sync mandatory — accurate timestamps for ISO 27001
config system ntp
  set type custom
  set ntpserver "pool.ntp.org"
  set syncinterval 60
  set source-ip 10.0.40.1
end
```

Synology DSM Hardening

```
# DSM Security Advisor settings (via API equivalent):
1. DSM → Control Panel → Security → Account
   - Enable auto-block after 5 failed logins, block for 600 seconds
   - Enable 2-Factor Authentication for admin accounts

2. DSM → Control Panel → Security → Advanced
   - HTTPS Only (disable HTTP)
   - TLS 1.2 minimum (1.3 preferred)
   - Enable HSTS preloading

3. DSM → Control Panel → File Services → SMB
   - Minimum SMB version: SMB3
   - Disable SMB1 (legacy — WannaCry attack vector)

4. DSM → Snapshot Replication → Settings → Advanced
   - Enable Immutable Snapshot: YES
   - Lock period: 96 hours

5. DSM → Control Panel → Network → Firewall
   - Allow from: 10.0.20.0/24 (NFS/SMB only, ports 2049/445)
   - Allow from: 10.0.10.0/24 (NFS only, port 2049 — Signiant)
   - Allow from: 10.0.40.0/24 (DSM admin — jump host)
   - DENY all other sources

6. DSM Service account for replication:
   - Dedicated account "repl-svc" with Replication Manager role only
   - Password in Vault — 90-day rotation
   - No DSM admin role
```

HPE Aruba Switch Hardening

```
# Disable unused services
no ip telnet server-enable
no ip tftp
no web-management http  # HTTPS only

# SSH hardening
ssh server-keygen bits 4096
ssh server max-authentication-tries 3
ssh server key-rotation-period 90

# SNMP v3 only — disable v1/v2c
no snmp-server community public
no snmp-server community private
snmp-server vrf mgmt

# Banner
banner motd "AUTHORIZED ACCESS ONLY — B2H Studios — Unauthorized access is a criminal offence"

# Disable CDP/LLDP on access ports (information leakage)
interface range 1/1/14-48
  no cdp
  no lldp transmit

# Port security — access ports
interface range 1/1/14-48
  port-security
  port-security max-mac-count 2
  port-security action shutdown
```

5.8 Priority Matrix

Pre-Go-Live (Must Fix Before Production)

Priority	Finding	Fix Required
P0 — Blocker	ZTNA brute force (Finding #1)	FortiAuth lockout configured and tested
P0 — Blocker	Ransomware via SMB (Finding #7)	Immutable snapshots verified active
P0 — Blocker	ZTNA VLAN pivot (Finding #6)	Per-resource ZTNA + NFS restriction tested
P0 — Blocker	Snapshot deletion (Finding #11)	Immutable lock test: attempt to delete snapshot via DSM — must fail
P0 — Blocker	DSM privilege escalation (Finding #8)	Policy 109 test: from VLAN 20 VM, attempt DSM admin — must fail
P1 — Required	All High findings (#2,4,5,9,10,13,14,15,16)	All configurations applied and tested
P2 — Recommended	Medium findings (#3,12,17)	Applied before go-live where possible

Post-Deployment (Enhancements Within 90 Days)

Priority	Enhancement	Cost
P1	Cloudflare Magic Transit or ISP DDoS scrubbing	Rs. 80,000/yr
P1	Email security gateway (FortiMail or Google Workspace Advanced)	Rs. 1,20,000/yr
P2	FortiSandbox Cloud ATP upgrade (vs. UTP)	Rs. 4,00,000/yr
P3	Penetration test by independent third party	Rs. 3,00,000 one-time

Updated BOM Items from Stress Test

Item	Reason	Cost (INR pre-GST)
Cloudflare Magic Transit (optional)	DDoS scrubbing — Finding #2	Rs. 80,000/yr (recurring)
Email security — FortiMail Cloud 25 users	Phishing protection — Finding #15	Rs. 1,20,000/yr (recurring)
Third-party penetration test	Independent validation — 90 days post go-live	Rs. 3,00,000 (one-time)
Optional additions total		**Rs. 4,40,000/yr + Rs. 3,00,000 one-time**

Part 6: Standard Operating Procedures

SOP-NET-001: FortiGate 120G Daily Operations & HA Management

Purpose: Define daily operational tasks, health checks, and HA management procedures for B2H Studios FortiGate 120G firewall HA pairs at Site A and Site B. **Scope:** FortiGate 120G Active and Passive units at both sites. **Audience:** Network Administrator **Review Cycle:** Quarterly **Version:** 1.0

Daily Tasks

Time	Task	Steps	Expected Result
09:00	Dashboard health check	1. Login to FortiGate GUI (via jump host) 2. Check Dashboard → System Information → HA Status 3. Verify Active = Unit 1, Passive = Unit 2	HA Status shows “Active-Passive, in sync”
09:05	Resource utilisation check	1. Dashboard → CPU: should be <50% 2. RAM: should be <70% 3. Sessions: note count 4. If >80%	CPU <50%, RAM <70%

Time	Task	Steps	Expected Result
		CPU for >10min, escalate	
09:10	SD-WAN health check	1. Network → SD-WAN → Status 2. Verify both ISP members show “alive” 3. Check latency values (should be <100ms to ISP gateway)	Both ISPs “alive”
09:15	FortiGuard subscription check	1. System → FortiGuard 2. Verify all subscriptions show “Licensed” with valid expiry dates 3. Last signature update should be within 2 hours	All signatures current
09:20	Log review (last 24hr)	1. Log & Report → Forward Traffic 2. Filter: last 24 hours, Action = Deny 3. Note any unusual deny events — check for port scans, brute force	No unexplained deny spikes

Weekly Tasks

Task	Steps
HA failover test	1. Notify IT Lead: “Scheduling FortiGate HA failover test — 30 second disruption expected” 2. From CLI: execute ha failover 3. Monitor: confirm Passive becomes Active within 3 seconds 4. Verify editor ZTNA sessions resume (ask 2 editors to test) 5. Restore original priority: execute ha failover again
Firmware review	1. System → Firmware 2. Note current version 3. Check FortiGuard release notes for any critical patches 4. If critical patch: schedule maintenance window — test on Passive first
Backup FortiGate config	1. System → Configuration → Backup 2. Download to jump host: /backups/fortigate/FW-SITEAB-$(date

Task	Steps
	).conf 3. FortiAnalyzer auto-backup also runs nightly — verify in FortiAnalyzer

Escalation Matrix

Issue	Level	Notify	Response Time
HA failover occurred unexpectedly	L2	IT Lead + IT Manager	1 hour
Both ISPs down simultaneously	L3	IT Manager + VConfi NOC	15 minutes
FortiGuard subscriptions expired	L2	IT Manager	4 hours
Active session count >2M	L2	IT Lead	1 hour
Security breach detected in logs	L3	CISO + VConfi Security	Immediate

Reference Links

- FortiGate 120G Admin Guide: https://docs.fortinet.com/product/fortigate/7.6
- FortiGuard Threat Intelligence: https://www.fortiguard.com
- VConfi Support: +91-XXXX-XXXXXX

SOP-NET-002: HPE Aruba CX 6300M Switch Management

Purpose: Manage VSX switch pairs, monitor health, and perform maintenance at both sites.
Scope: HPE Aruba CX 6300M SW1 and SW2 at Site A, SW3 and SW4 at Site B.
Audience: Network Administrator **Review Cycle:** Quarterly

Daily Health Check Procedure

```
Step 1: Access switch via jump host
  ssh admin@10.0.40.20  # SW1 Site A

Step 2: Check VSX peer status
  show vsx status
  Expected output: "VSX Peer State: peer-up"
  If NOT peer-up: escalate to L3 immediately

Step 3: Check interface status
  show interface brief | include down
  Any production port down unexpectedly = investigate

Step 4: Check LACP bond status
  show lacp interfaces
  Verify all LAGs show "Collect" and "Distribute" = Active on all members

Step 5: Check 802.1X authentication
  show dot1x
  Count authenticated ports = should match number of connected devices

Step 6: Check spanning tree (redundancy)
```

```
  show spanning-tree
  All ports should be in Forwarding or Discarding (never stuck in Learning)

Step 7: Check error counters
  show interface counters errors
  Port error rate >0.01% = investigate cable or SFP

Step 8: Check PoE budget (if PoE ports used)
  show poe interface brief
  PoE consumed should be <80% of 720W budget
```

Adding a New Device to Network

```
Step 1: Get device MAC address and confirm VLAN assignment from IT Manager

Step 2: If access port (no trunking needed):
  conf t
  interface 1/1/XX
    description "DeviceName-Location"
    no shutdown
    no routing
    vlan access VLANID
    dot1x pae authenticator
    dot1x authentication server-group B2H-RADIUS
    exit

Step 3: If trunk port (server/NAS):
  interface 1/1/XX
    description "ServerName"
    no shutdown
    no routing
    vlan trunk allowed 20,40
    exit

Step 4: Test connectivity from new device
Step 5: Document in asset register with port number, MAC, VLAN, date added
```

VSX Recovery Procedure (Peer Link Down)

```
Step 1: Identify which switch lost VSX peer
  show vsx status
  Check which switch shows "peer-down"

Step 2: Check VSX ISL cable (ports 51-52 on both switches)
  show interface 1/1/51,1/1/52
  If down: check physical connection and SFP28

Step 3: If ISL links up but VSX still down:
  On SW1: show vsx debug
  Check keepalive status: ping SW2 mgmt IP manually from SW1

Step 4: If keepalive fails:
  Check mgmt cable SW1 mgmt0 → dedicated mgmt network
  Restart VSX: (only if peer confirmed unreachable)
    conf t
    vsx
```

keepalive restart

Step 5: If hardware failure confirmed on one switch:
Single switch can carry full load (VSX designed for this)
Order replacement under HPE Foundation Care 4hr SLA
Contact VConfi for deployment assistance

Escalation Matrix

Issue	Level	Notify	Response
VSX peer down	L3	VConfi NOC + IT Lead	15 minutes
Multiple ports down	L2	IT Lead	1 hour
802.1X authentication failures >10	L2	Network Admin + IT Lead	1 hour
Switch CPU >70% sustained	L2	Network Admin	4 hours

SOP-STG-001: Synology FS6400 Operations

Purpose: Day-to-day operations of the FS6400 all-flash NAS including health monitoring, snapshot management, and user quota management. **Scope:** Synology FS6400 at Site A. **Audience:** IT Lead / Storage Administrator **Review Cycle:** Quarterly

Daily Health Check

Step 1: Login to DSM at https://10.0.40.30 via jump host

Step 2: Check Storage Manager → Overview
- Volume status: NORMAL (green)
- RAID group: NORMAL
- Available capacity: should be >20TB (alert at <20TB)
- SSD cache: enabled and healthy

Step 3: Check Storage Manager → HDD/SSD
- All 24 drives: Status = Normal
- Any drive showing "Warning" = check SMART data immediately
- SMART → Run Quick Test on Warning drive
- Contact VConfi if Reallocated Sectors Count increasing

Step 4: Check Snapshot Replication → Snapshot list
- /volume1/projects/active: Latest snapshot timestamp < 2 hours ago
- Total count = 48 (full window retained)
- If latest snapshot >2 hours old: check snapshot schedule

Step 5: Check Network → Network Interface
- Bond0 (eth0-eth3 LACP): Status = Connected, Speed = 10000 Mbps ×4
- No link failures in bond

Step 6: Check Control Panel → Log Center → Logs
- Review last 24 hours for errors
- Common non-critical: Info/Warning for user logins
- Escalate: Error/Critical level entries

Snapshot Management

Snapshot schedule (pre-configured at deployment):
  Every 2 hours → Retain 48 snapshots (96 hours)
  Weekly → Retain 4 snapshots (4 weeks)
  Monthly → Retain 3 snapshots (3 months)

Manual snapshot before major project delivery or migration:
  DSM → Snapshot Replication → Snapshot
  → Take Snapshot
  → Add description: "Pre-delivery-ProjectName-Date"

Restoring a file from snapshot:
  Step 1: Find snapshot timestamp that predates the issue
  Step 2: Snapshot Replication → Browse → Select snapshot
  Step 3: Navigate to lost file
  Step 4: Right-click → Restore to original location OR
        Right-click → Copy to → /volume1/recovery/
  Step 5: Confirm with user that file is restored correctly

Restoring entire volume (ransomware scenario):
  Step 1: STOP REPLICATION IMMEDIATELY to HD6500 (prevent propagation)
  Step 2: Identify last clean snapshot (before ransomware)
  Step 3: Storage Manager → Snapshot Replication → Restore Volume
  Step 4: Select snapshot → confirm → estimated time: 2-4 hours for 80TB
  Step 5: After restore: run antivirus scan on restored data
  Step 6: Re-enable replication
  Step 7: Notify all editors: estimated downtime + recovery ETA

User Quota Management

View current quotas:
  DSM → Control Panel → Quota

Add new editor quota:
  1. Control Panel → Quota → Edit
  2. Select shared folder: /volume1/projects/active
  3. Add user: [editor-username]
  4. Set quota: 5TB (per editor — prevents single user from filling NAS)
  5. Apply

Review quota usage weekly:
  DSM → Control Panel → Quota → Usage Report
  Report to IT Lead: any user at >80% of quota

Escalation Matrix

Issue	Level	Notify	Response
Any drive shows Warning	L2	IT Lead + VConfi	1 hour
RAID degraded (drive failed)	L3	VConfi NOC + IT Manager	15 minutes
Volume approaching 90% full	L2	IT Lead	4 hours
Snapshot gap >4 hours	L2	IT Lead	1 hour

Issue	Level	Notify	Response
NAS unreachable	L3	VConfi NOC + IT Manager	Immediate

SOP-STG-002: Synology HD6500 Operations & Replication Management

Purpose: Operations of HD6500 warm archive/replication tier at both sites. **Scope:** HD6500 Site A (warm tier) and HD6500 Site B (DR tier). **Audience:** IT Lead **Review Cycle:** Quarterly

Replication Health Check (Daily)

```
Step 1: Login to DSM → Replication Manager
  Site A: https://10.0.40.31
  Site B: https://10.1.40.31

Step 2: Check all replication jobs
  Active Projects job: Last sync time < 15 minutes
  Archive job: Last sync time < 4 hours
  Status: "Completed" or "Running" — never "Failed" or "Error"

Step 3: If replication shows "Failed":
  Click on failed job → View log
  Common causes:
    a. Site B HD6500 unreachable: check inter-site connectivity
       ping 10.1.30.20 from Site A jump host
    b. Disk space on Site B: check Site B volume — must have >10% free
    c. Network timeout: check inter-site bandwidth — may need to throttle

Step 4: Check replication speed
  Active job → Progress → Transfer speed should be >100 MB/s during business hours
  If <50 MB/s sustained: check inter-site bandwidth utilization

Step 5: Check Hybrid Share sync (to Wasabi)
  DSM → Hybrid Share → Status
  "Syncing" or "Up to date" = normal
  "Error" → View error details → usually expired API key or Wasabi quota
```

Archive Management

```
Moving completed projects from FS6400 to HD6500 archive:
  Step 1: Confirm project is "completed" with IT Lead and editor
  Step 2: Create project folder on HD6500: /volume1/archive/YYYY-MM/ProjectName
  Step 3: Initiate rsync from FS6400 to HD6500 (via admin jump host):
    rsync -avz --progress 10.0.30.10:/volume1/projects/active/ProjectName/ \
                          10.0.30.20:/volume1/archive/YYYY-MM/ProjectName/
  Step 4: Verify file count and size match (rsync output)
  Step 5: Remove from FS6400 /projects/active after confirming HD6500 copy
  Step 6: Update project register (shared spreadsheet) with archive date and path

Retrieving archived project for re-edit:
  Step 1: Editor requests project from IT Lead
  Step 2: Copy from HD6500 archive → FS6400 /projects/active
    rsync -avz --progress 10.0.30.20:/volume1/archive/YYYY-MM/ProjectName/ \
```

10.0.30.10:/volume1/projects/active/ProjectName/
Step 3: Notify editor: project available at \\NAS\projects\active\ProjectName
Step 4: Set expiry reminder: move back to archive after re-edit complete

---

SOP-STG-003: Signiant Jet v7.0 Ingest Operations

Purpose: Manage Signiant Jet SDCX for media ingest from external partners. **Scope:** Signiant Jet v7.0 SDCX VM at Site A. **Audience:** IT Lead **Review Cycle:** Quarterly

New Ingest Transfer Setup

Step 1: Obtain partner details from Producer/PM:
- Partner company name
- Partner's Signiant account / IP address
- Expected delivery format, size, and timing
- SHA-256 checksum list (if provided by partner)

Step 2: Configure ingest job in Signiant Manager:
Login: https://10.0.10.11:8080 (via jump host → VLAN 10)
→ Jobs → New Transfer Job
→ Source: Partner endpoint (FASP pull or push — confirm with partner)
→ Destination: /volume1/ingest on FS6400 (NFS mount at /mnt/fs6400-ingest)
→ Checksum: SHA-256 verify enabled
→ Bandwidth: throttle to 80% of available WAN (800 Mbps)
→ Notification: email IT Lead on completion or failure

Step 3: Share ingest link/token with partner
→ Signiant → Shared Links → Create
→ Set expiry: delivery date + 2 days
→ Send to partner via encrypted email

Step 4: Monitor transfer
→ Signiant Dashboard → Active Transfers
→ Progress, speed, ETA visible
→ Typical 100GB transfer at 800Mbps: ~17 minutes

Step 5: Post-transfer verification
→ Signiant Transfer Complete notification
→ Check: Transfer Report → Status = Completed, Checksum = Pass
→ Verify file count and total size match partner manifest
→ If checksum fail: DO NOT move to /projects/active — contact partner

Step 6: Move to production
→ After verification: move from /volume1/ingest to /volume1/projects/active
→ Notify editor: footage ready at \\NAS\projects\active\IngestFolderName

Failed Transfer Recovery

Scenario: Transfer shows "Failed" in Signiant

Step 1: View transfer log → note error code
Error 1001 (Authentication): Partner token expired → regenerate and resend
Error 2001 (Network): Connectivity issue → check FortiGate policy 102 source IP
Error 3001 (Disk full): FS6400 /volume1/ingest full → archive older ingest data
Error 4001 (Checksum): Bit error in transit → retry transfer (Signiant auto-retries 3x)

Step 2: For network errors — test FASP manually:
  From SDCX VM: fasp-test --server <partner-IP> --port 33001
  Should connect and show latency + bandwidth estimate

Step 3: For persistent failures:
  Contact Signiant Support: support.signiant.com
  Provide: Transfer ID, error log export from Signiant Manager
  Escalate to VConfi if FortiGate configuration suspect

SOP-MON-001: Zabbix Monitoring & Alert Response

Purpose: Define daily Zabbix monitoring review and alert response procedures. **Scope:** Zabbix 6.4 server monitoring all 24 B2H infrastructure devices. **Audience:** Network Administrator / IT Lead **Review Cycle:** Quarterly

Daily Dashboard Review (09:30 daily)

Step 1: Login to Zabbix at https://10.0.40.52/zabbix (via jump host)
  Default view: B2H-Overview dashboard

Step 2: Check Problem panel
  Green (0 problems) = proceed with tasks
  Any problem listed:
    Severity Information/Warning: Review at end of day
    Severity High: Investigate within 1 hour
    Severity Critical: Investigate immediately (should have received SMS)

Step 3: Check each device category
  a. Firewalls: CPU/memory/sessions/HA state
  b. Switches: port status/VSX state/errors
  c. Storage: volume usage/RAID status/replication lag
  d. Servers: CPU/memory/disk/PSU
  e. UPS: battery/load/input power

Step 4: Review Availability Report (weekly, Monday)
  Reports → Availability Report
  Any device with <99.9% availability: investigate cause and document

Step 5: Review Audit Log (weekly, Monday)
  Administration → Audit Log
  Review: configuration changes, user actions, alert history

Alert Response Procedures

CRITICAL alert received (SMS + email + call):
  Within 15 minutes:
    Step 1: Log into Zabbix → Problem → Acknowledge alert
    Step 2: Identify device and metric
    Step 3: Log into affected device (via jump host)
    Step 4: Diagnose (see device-specific SOP)
    Step 5: If unresolvable in 30 minutes: call VConfi NOC
    Step 6: Document action in FortiAnalyzer incident log

HIGH alert received (SMS + email):

```
  Within 1 hour:
    Same steps as Critical but with 1-hour response window
    Document resolution in daily ops log

WARNING alert received (email):
  Within 4 business hours:
    Investigate at next available opportunity
    Document if recurring (may indicate hardware degradation)
```

Adding New Monitored Device

```
Step 1: Zabbix → Configuration → Hosts → Create Host
  Host name: <device-hostname>
  Visible name: <human-readable-name>
  Groups: B2H-Network (or B2H-Storage / B2H-Server)
  Agent/SNMP interface: IP address of device management NIC

Step 2: Assign templates
  Click: Templates → Select templates based on device type:
    FortiGate: "Template Net Fortinet FortiGate"
    HPE Aruba: "Template Net HP Aruba"
    Synology: "Template Storage Synology"
    APC UPS: "Template Power APC UPS SNMP"
    Dell iDRAC: "Template Server Dell iDRAC SNMP"

Step 3: Configure SNMP credentials (for SNMP hosts)
  Host → SNMP Interfaces → Set version to SNMPv3
  Security name: zabbix-monitor
  Auth/Priv passphrases: retrieve from Vault

Step 4: Test connectivity
  Host → ... → Test
  Verify data is populating in Latest Data

Step 5: Set alert thresholds (if overriding template defaults)
  Configuration → Hosts → Triggers → create custom trigger if needed
```

SOP-SRV-001: Server Patching & Preventive Maintenance

Purpose: Define patching schedule and preventive maintenance for all servers. **Scope:** Dell PowerEdge R760 Site A and Site B, all hosted VMs. **Audience:** IT Lead **Review Cycle:** Quarterly

Monthly Patching Schedule

```
Week 1 of each month — VM OS patching (Site A non-critical VMs):
  Schedule: Sunday 02:00–06:00 IST (zero editors active)

  For each Ubuntu VM (signiant, vault, jumphost, zabbix):
    Step 1: Snapshot VM via ESXi before patching (rollback point)
    Step 2: SSH to VM via jump host
    Step 3: sudo apt update && sudo apt upgrade -y
    Step 4: Check for kernel updates: sudo apt list --upgradable | grep linux
    Step 5: If kernel update: plan reboot for next maintenance window
    Step 6: Verify service running post-patch:
```

```
    signiant-sdcx: systemctl status signiant-sdcx
    vault: systemctl status vault
    zabbix: systemctl status zabbix-server
  Step 7: Remove VM snapshot after 48hr of stable operation

For Kaspersky SC (Windows Server 2022):
  Step 1: Snapshot VM
  Step 2: RDP via jump host → Windows Update → Install all approved updates
  Step 3: Reboot → verify Kaspersky SC console accessible
  Step 4: Remove snapshot after 48hr

Week 2 — FortiAnalyzer + FortiAuthenticator + EMS updates:
  Check FortiGuard for new VM releases
  Download update package → apply in maintenance window
  Verify: FortiAnalyzer log ingestion continues, FortiAuth RADIUS active, EMS policy active

Week 3 — Critical security patches (emergency only):
  Any Critical/High CVE affecting B2H stack: patch within 72 hours regardless of schedule
  FortiGuard PSIRT advisories: https://www.fortiguard.com/psirt
  Synology security advisories: https://www.synology.com/en-global/security
  HPE security bulletins: https://support.hpe.com/hpesc/public/home

Week 4 — Hardware preventive maintenance:
  Step 1: Check iDRAC for hardware health alerts
    Open browser → https://10.0.40.40 (iDRAC IP) via jump host
    System → Overview → All components should show "OK"
  Step 2: Physical inspection (if on-site):
    - Rack temperature sensors (iDRAC + Zabbix)
    - Unusual noise from drives or fans
    - Cable seating — reseat if any appear loose
  Step 3: RAID health
    iDRAC → Storage → Virtual Disks → Status = Online
    Physical Disks: all Status = Online
  Step 4: Review iDRAC event log → clear after documenting
```

Server Firmware Updates (Quarterly)

```
Step 1: Check Dell Support site for firmware updates
  dell.com/support → Enter Service Tag → Drivers & Downloads
  Filter: Category = BIOS, iDRAC, PERC, NIC

Step 2: Download updates for review
  BIOS updates: apply only if critical security fix or compatibility issue
  iDRAC updates: apply if adds SNMP monitoring improvements
  PERC RAID controller: apply if addresses stability issues

Step 3: Apply via iDRAC remote update
  iDRAC → Maintenance → System Update
  Upload firmware file → Schedule: immediate or next reboot
  iDRAC updates can be applied live (no reboot needed)
  BIOS/PERC require reboot → schedule maintenance window

Step 4: Verify post-update
  iDRAC → Firmware Version → confirm new version shown
  All services running normally after reboot
```

SOP-BKP-001: Backup & Restore Procedures

Purpose: Complete backup management for all B2H Studios data including scheduled backup verification, restore testing, and emergency recovery. **Scope:** FS6400 snapshots, HD6500 replication, Wasabi cloud archive. **Audience:** IT Lead **Review Cycle:** Quarterly

Weekly Backup Verification

Every Monday at 10:00:

Step 1: FS6400 snapshot verification
  DSM → Snapshot Replication → /volume1/projects/active
  Verify: 48 snapshots present, latest < 2 hours old
  Verify: Immutable lock icon visible on all snapshots (padlock symbol)

Step 2: HD6500 Site A replication verification
  DSM (10.0.40.31) → Replication Manager
  All jobs: Status = Completed or Running
  Last completion time for "Active-Projects" job: <15 min ago
  Last completion time for "Archive" job: <4 hours ago

Step 3: HD6500 Site B verification (call or remote access)
  DSM (10.1.40.31) → Volume usage
  Confirm: data is growing (new files replicated)
  Compare: Site A /volume1/projects/active file count vs. Site B /volume1/projects/active

Step 4: Wasabi verification
  HashiCorp Vault → access Wasabi API key temporarily
  aws s3 ls s3://b2h-studio-archive --recursive --human-readable --summarize | tail -3
  Confirm: total file count increasing week-over-week
  Confirm: Object Lock enabled: aws s3api get-bucket-object-lock-configuration --bucket b2h-studio-archive

Monthly Restore Test (Full)

First Saturday of each month — test window: 02:00–06:00 IST

Step 1: Snapshot restore test (FS6400)
  Select a test folder: /volume1/projects/active/test-restore/
  Create test files: 5GB of sample media files
  Wait for snapshot: confirm test folder appears in snapshot taken within 2 hours
  Delete test files
  Restore from snapshot: Snapshot Replication → Browse → Select snapshot → Restore to /volume1/recovery/
  Verify: files restored correctly, checksums match original
  Document: restore time, snapshot used, files verified

Step 2: HD6500 Site B restore test
  Access Site B HD6500
  Select random archive folder from last month
  Compare file listing and checksums: Site A archive vs. Site B replica
  Document: verification result, any discrepancies

Step 3: Wasabi recall test

Select random archived file from Wasabi (age >30 days)
Trigger recall via Hybrid Share: open file path in DSM file station
Measure recall time: should be <5 minutes for files <10GB
Verify file integrity: checksum match
Document: file name, size, recall time, verification result

Step 4: Document in backup test register
Date, tester, all three tests, pass/fail, any issues found, corrective actions

---

SOP-DR-001: DR Failover & Failback Runbook

Purpose: Complete step-by-step procedure for declaring a disaster, failing over to Site B, and recovering back to Site A. **Scope:** Both sites — all B2H Studios infrastructure. **Audience:** IT Lead, IT Manager **Review Cycle:** Semi-annually (+ after any actual DR activation)

Disaster Declaration Criteria

Activate this runbook if ANY of the following occur at Site A: - FortiGate unreachable for >15 minutes AND cannot be resolved remotely - FS6400 NAS volume failure — data inaccessible for >30 minutes - Physical facility issue (fire, flood, power failure >12 hours, building access blocked) - Ransomware confirmed on FS6400 and snapshots compromised

Phase 1: Assessment (Target: 0–15 minutes)

Step 1: Receive alert (Zabbix/FortiAnalyzer/manual report)

Step 2: IT Lead attempts remote access to Site A systems
Try: FortiGate GUI → https://10.0.40.1 via jump host
Try: Zabbix dashboard → check which devices are down
Try: iDRAC → https://10.0.40.40

Step 3: If Site A confirms unreachable:
IT Lead calls IT Manager: "Activating DR runbook — Site A incident"
IT Manager calls VConfi NOC: +91-XXXX-XXXXXX
IT Manager sends Slack/email to all 25 editors: "NAS maintenance — editors offline temporarily"

Step 4: IT Lead accesses Site B
VPN to Site B OOB network OR physically at Site B
Login to Site B FortiGate: 10.1.40.1
Login to Site B HD6500 DSM: 10.1.40.31
Verify Site B systems healthy before proceeding

Phase 2: Failover Activation (Target: 15–60 minutes)

Step 5: Stop Site B replication (prevent stale data overwrite)
DSM Site B → Replication Manager → Select ALL jobs → Disable
Confirm: all jobs show "Disabled" status

Step 6: Promote Site B HD6500 to read-write
DSM Site B → Shared Folders → Edit each folder:
/volume1/projects/active → uncheck "Make this shared folder read-only"
/volume1/archive → uncheck read-only
/volume1/deliverables → uncheck read-only
Apply → confirm write access

Step 7: Update DNS for ZTNA endpoint
Login to domain registrar DNS management
Update: ztna.b2hstudios.com → Site B FortiGate WAN IP
TTL: set to 300 seconds (5 minutes) for fast propagation
Wait 5 minutes → verify: nslookup ztna.b2hstudios.com shows Site B IP

Step 8: Verify Site B FortiGate ZTNA is operational
FortiGate Site B → Dashboard → check ZTNA proxy status
Test: from personal phone (different network) → connect FortiClient ZTNA
Confirm: ZTNA connects and NAS shares accessible at \\NAS-DR\projects\active

Step 9: Notify all editors
Email subject: "NAS Access Restored — Reconnect FortiClient"
Body: "Please disconnect and reconnect your FortiClient ZTNA. You will connect to our DR site automatically. Your projects are available. Some recent changes may reflect up to [RPO estimate] ago."
Also: WhatsApp group message for immediate notification

Step 10: Monitor Site B operations
Zabbix Site B dashboard: all devices green
Monitor: editor reconnection count in FortiGate Site B → active ZTNA sessions
All 25 editors should reconnect within 30 minutes

Phase 3: Site A Recovery (Variable Duration)

Step 11: Begin Site A root cause analysis with VConfi support
VConfi on-site visit if hardware failure
HPE Foundation Care activated if switch failure
FortiGate RMA if hardware failure

Step 12: Restore Site A to operational
Verify FortiGate Site A up
Verify switches up
Verify FS6400 and HD6500 Site A up and accessible

Step 13: Data reconciliation
Note: editors have continued working on Site B during DR
New files exist on Site B that don't exist on Site A
Plan: reverse replication Site B → Site A for changed/new data only

Phase 4: Failback (Target: <4 hours after Site A recovery)

Step 14: Identify delta data (files changed/created on Site B during DR period)
On Site B DSM: File Station → Search files modified after DR activation timestamp

Step 15: Run reverse replication (manual rsync or Replication Manager)
Replication Manager Site B → create temporary reverse job
Source: Site B /projects/active
Destination: Site A HD6500 /projects/active
Run once → verify completion

Step 16: Copy from Site A HD6500 to Site A FS6400 (active projects)
rsync from HD6500 to FS6400 for active project data

Step 17: Verify Site A data integrity

File count comparison: Site A vs Site B
Spot-check 5 random project files: open in editor — confirm playable

Step 18: Restore DNS to Site A
Update DNS: ztna.b2hstudios.com → Site A FortiGate WAN IP
Wait 5 minutes for propagation

Step 19: Notify editors to reconnect to Site A
Email: "Maintenance complete — please reconnect FortiClient ZTNA"

Step 20: Resume normal forward replication Site A → Site B
DSM Site A → Replication Manager → Enable all jobs
Verify: first sync completes successfully

Step 21: Document incident
Complete incident report per SOP-SEC-002
Include: timeline, impact, root cause, actions taken, preventive measures

---

SOP-SEC-001: FortiAnalyzer SIEM Daily Review

Purpose: Daily review of FortiAnalyzer SIEM for security events requiring attention. **Scope:** FortiAnalyzer VM at Site A. **Audience:** IT Manager / CISO **Review Cycle:** Quarterly

Daily Review (30 minutes — 09:30 daily)

Step 1: Login to FortiAnalyzer at https://10.0.20.11 via jump host

Step 2: Check Incidents panel
FortiView → Threats → Incidents
Any new incidents since yesterday: review each

Step 3: Check Top Denied Traffic (last 24 hours)
FortiView → Traffic → Top Denied
Look for: repeated attempts from same external IP (port scanner / brute force)
Action: if same IP >100 denies — add to FortiGate address block list

Step 4: Check correlation rule alerts
Reports → Security Report → Correlation Alerts (last 24 hours)
Review each triggered rule:
COR-001 (brute force): Was this resolved? Is source IP blocked?
COR-004 (mass modification): Was this investigated? False positive or real?
COR-009 (large upload): What was uploaded? Who? Legitimate or DLP breach?

Step 5: Check log coverage
System → Log Rates
All log sources should be sending: FortiGate-A, FortiGate-B, FortiGate-SiteB (both), Switch syslog
If any source shows "no logs in 24h": investigate connectivity from that device

Step 6: Weekly tasks (Monday only)
Run: Security Posture Report (built-in template)
Review: Top attackers, top blocked URLs, policy hit counts
Email report PDF to IT Manager and CISO

SOP-SEC-002: Incident Response Workflow

Purpose: Structured incident response for all security events at B2H Studios. **Scope:** All IT systems. **Audience:** IT Manager, CISO, IT Lead **Review Cycle:** Quarterly

Incident Severity Classification

Severity	Definition	Examples	Response
P1 — Critical	Active security breach or service down for all users	Ransomware active, FortiGate HA both down, DR declared	Immediate — all hands
P2 — High	Potential breach or significant service degradation	ZTNA unreachable, suspicious admin access, single NAS down	1-hour response
P3 — Medium	Security event requiring investigation	DLP alert, new device detected, single ISP down	4-hour response
P4 — Low	Non-urgent security event	Phishing email reported, policy violation warning	Next business day

Incident Response Steps

Phase 1: DETECT (0–15 minutes)
  Alert source: Zabbix, FortiAnalyzer, editor report, IT staff observation
  Step 1: Confirm alert is genuine (not false positive)
  Step 2: Classify severity per table above
  Step 3: Notify per escalation matrix

Phase 2: CONTAIN (15 minutes – 2 hours depending on severity)
  For ransomware/malware:
    Step 1: IMMEDIATELY isolate affected endpoint
      FortiClient EMS → quarantine device
    Step 2: Stop NAS replication to prevent propagation to DR
      DSM → Replication Manager → Disable all jobs
    Step 3: Identify blast radius: which files affected?
    Step 4: Preserve evidence: take snapshot of affected system (VM snapshot if possible)
    Step 5: Check: is ransomware still active? Kaspersky detection status?

  For data breach/exfiltration:
    Step 1: Identify source user/device from FortiAnalyzer
    Step 2: Terminate user's ZTNA session: FortiClient EMS → disconnect device
    Step 3: Block source IP at FortiGate
    Step 4: Preserve FortiAnalyzer logs for evidence (export before any changes)

Phase 3: ERADICATE (2–24 hours)
  Malware: Kaspersky full scan → quarantine/remove all threats
  For ransomware: restore from last clean snapshot (see SOP-BKP-001)
  For compromised account: reset credentials via Vault, re-enroll in FortiAuthenticator

Phase 4: RECOVER (hours–days)
  Restore services in priority order:
    1. Editor NAS access (FS6400 restore if needed)

2. ZTNA connectivity for editors
3. Monitoring/SIEM
4. Non-critical services

Verify: all systems operational, users reconnected, monitoring clean

Phase 5: POST-INCIDENT (within 5 business days)
Root cause analysis document: What happened? How? Why? Impact?
Corrective actions: What changes prevent recurrence?
Update SOPs if new procedure identified
Report to CISO and management
If data breach affecting client/external data: legal/regulatory notification review

Off-Boarding Procedure (Termination Trigger)

Within 30 minutes of HR notification:
Step 1: IT Lead — FortiClient EMS → Devices → Find user device → Revoke certificate
Step 2: IT Lead — FortiAuthenticator → Users → Disable user account
Step 3: IT Manager — HashiCorp Vault → Revoke user-specific secrets (if any API keys issued)
Step 4: IT Lead — AD/LDAP account disable
Step 5: IT Lead — Remove from Kaspersky user group
Step 6: IT Manager — Revoke any NAS shared folder permissions
Step 7: IT Manager — Change any shared credentials the user knew (documented in Vault)
Step 8: Document: completed checklist with timestamps, witness signature

---

SOP-SEC-003: ISO 27001:2022 Audit Preparation Checklist

Purpose: Quarterly self-assessment to ensure B2H Studios remains audit-ready. **Scope:** All infrastructure and processes. **Audience:** IT Manager, CISO **Review Cycle:** Quarterly

Quarterly Audit Preparation (Run Every 3 Months)

#	Check	How to Verify	Pass Criteria	Responsible
1	Asset register current	Open asset register spreadsheet → all devices have serial numbers, purchase dates, current status	No asset >30 days without update	IT Lead
2	Network diagrams current	Compare diagram to actual rack layout and IP scheme	Diagrams match reality	Network Admin
3	Firewall rules reviewed	FortiGate → Policy → Review each policy — confirm still required	All rules justified, no orphaned rules	Network Admin

#	Check	How to Verify	Pass Criteria	Responsible
4	Backup restore test completed	Backup test register has entry within 35 days	Pass date within 35 days	IT Lead
5	DR failover test completed	DR test register has entry within 90 days	Pass date within 90 days	IT Lead
6	User access review completed	Export: all users with ZTNA access → confirm each is active employee	No terminated employees with access	IT Manager
7	Vulnerability scan report	Run Nessus Essentials (free) or OpenVAS scan on internal network	Critical/High vulns remediated within 30 days	IT Lead
8	Log retention verified	FortiAnalyzer → Log Volume → 90 days hot storage present	90+ days accessible	IT Manager
9	SOP documents current	Check: all SOPs have review date within 90 days	All SOPs reviewed within quarter	IT Manager
10	Change management records	Zabbix + FortiAnalyzer change logs → all changes have associated change request	No undocumented changes	Network Admin
11	Incident register current	Incident log → all P1/P2 incidents have complete RCA	No open incidents >5 business days	CISO
12	AMC/warranty status verified	Cross-reference asset register with warranty dates	No device >6 months past warranty without AMC	IT Lead
13	Admin password	Vault → Lease history	All rotations current	IT Manager

#	Check	How to Verify	Pass Criteria	Responsible
	rotation verified	→ All passwords rotated within 90 days		
14	Kaspersky definitions current	Kaspersky SC → Managed Devices → all devices last updated <24 hours	All 25 endpoints current	IT Lead
15	UPS battery health check	Zabbix UPS dashboard → battery capacity > 80%	All UPS batteries >80% SoC	IT Lead

---

SOP-USR-001: Remote Editor Guide — ZTNA & NAS Access

Purpose: End-user guide for remote editors to connect, access media, and report issues. **Scope:** 25 remote editors — any location. **Audience:** End Users (Editors) **Review Cycle:** Semi-annually

First-Time Setup (New Editor Onboarding)

You will receive from IT Lead:
- FortiClient software download link
- Your username (firstname.lastname@b2h.internal)
- Your temporary password (you will set your own on first login)
- Your TOTP enrollment QR code (for Google Authenticator or similar)

Step 1: Install FortiClient
Download from: [IT-provided link]
Install: standard installation, all defaults
Restart if prompted

Step 2: Enroll your TOTP (two-factor authentication)
Download Google Authenticator or Microsoft Authenticator on your phone
Scan the QR code provided by IT Lead
Test: confirm a 6-digit code appears and changes every 30 seconds

Step 3: Configure FortiClient ZTNA connection
Open FortiClient → Remote Access → Add New Connection
Name: B2H Studios
Remote Gateway: ztna.b2hstudios.com
Port: 443
Authentication: Certificate + Username/Password

Step 4: First connection
Click Connect
Enter username + password + TOTP code when prompted
FortiClient will check your device (posture check: ~10 seconds)
Wait for "Connected" status (green)

Step 5: Map your NAS drives
- After connected, open File Explorer (Windows) or Finder (Mac)
- Windows: Map Network Drive
  - Drive letter: Z (or any)
  - Folder: \\nas.b2h.internal\projects\active
- Mac: Connect to Server
  - Server address: smb://nas.b2h.internal/projects/active

You should now see project folders. Contact IT Lead if anything fails.

Daily Connection

Each morning:
1. Open FortiClient
2. Click Connect to "B2H Studios"
3. Enter username + password + 6-digit TOTP code
4. Wait for Connected status
5. Your mapped drive (Z:) will reconnect automatically

At end of day:
1. Close editing software and save all work
2. FortiClient → Disconnect
3. You can leave NAS drive mapped — it will reconnect tomorrow

IMPORTANT: Never leave FortiClient connected when not working. Disconnect at end of day.

Troubleshooting

Problem	First Action	If Still Not Working
“Cannot connect” when opening FortiClient	Check your internet connection — can you open a website?	Call IT Lead
“Authentication failed”	Double-check username, password, and TOTP code (must be current 6-digit code)	Call IT Lead — may need account reset
“Posture check failed”	Ensure Kaspersky is running (check system tray) and disk encryption is on	Call IT Lead
NAS drive not showing after connecting	Open File Explorer → Z: drive → double-click to reconnect	Map drive again (see setup Step 5)
Files transferring very slowly	Check your home internet speed: fast.com — if <50Mbps, contact ISP	Call IT Lead
Cannot save files to NAS	Check your quota — you may be at 5TB limit	Email IT Lead with folder name
FortiClient disconnects mid-session	This usually means your internet connection dropped	Reconnect FortiClient — your NAS files are safe

Getting Help

Contact	How	When
IT Lead	WhatsApp: +91-XXXX-XXXXXX	Any technical issue
IT Manager	Email: it@b2hstudios.com	Access requests, escalations
Emergency (NAS down for all editors)	Call IT Lead + IT Manager	Production blocking issue
VConfi Support	Via IT Lead	Infrastructure-level issues