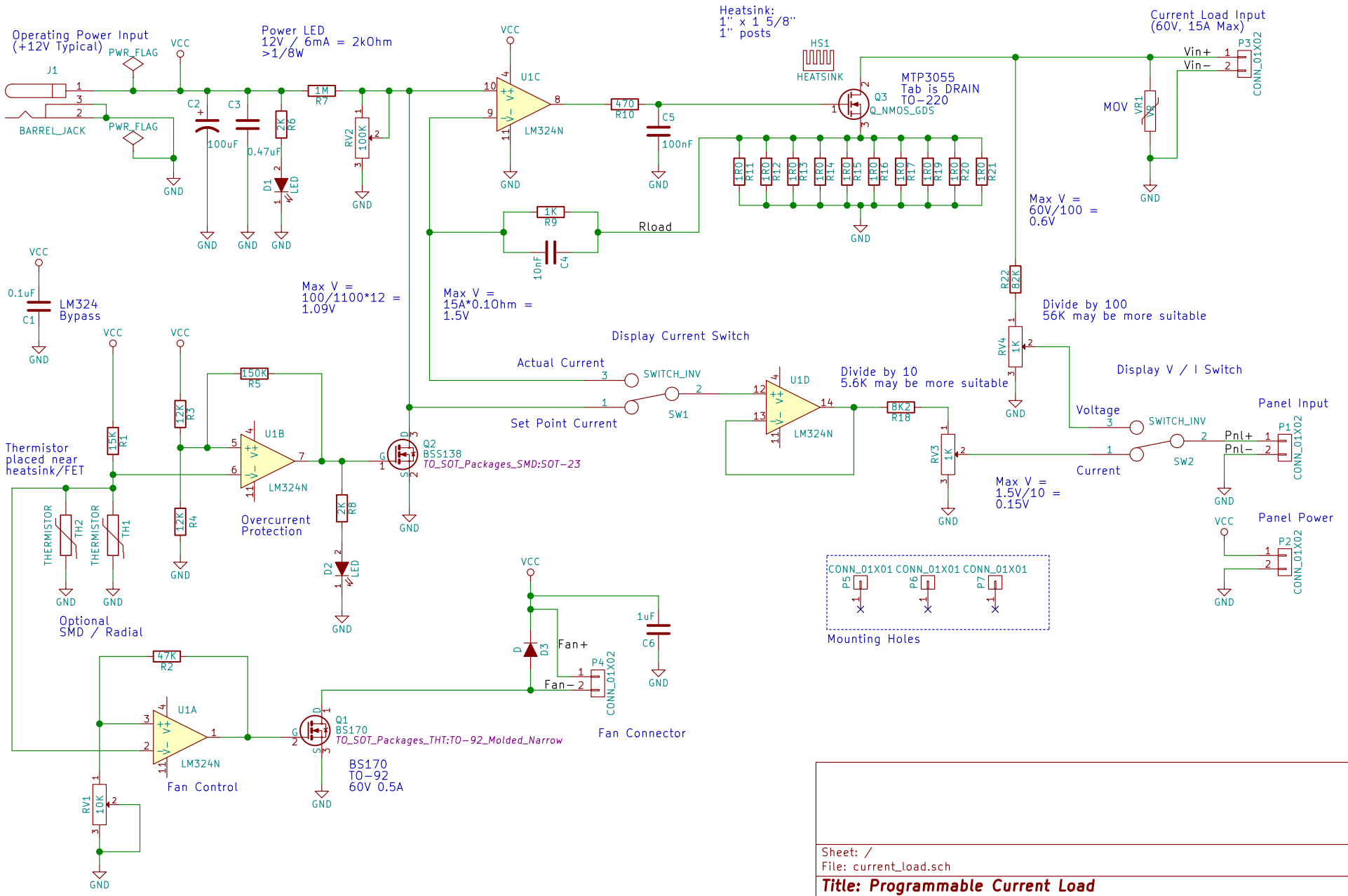

Sheet: /
File: current_load.sch

Title: Programmable Current Load

Size: A4	Date:	Rev: 1
KiCad E.D.A. kicad 4.0.1-stable		Id: 1/1