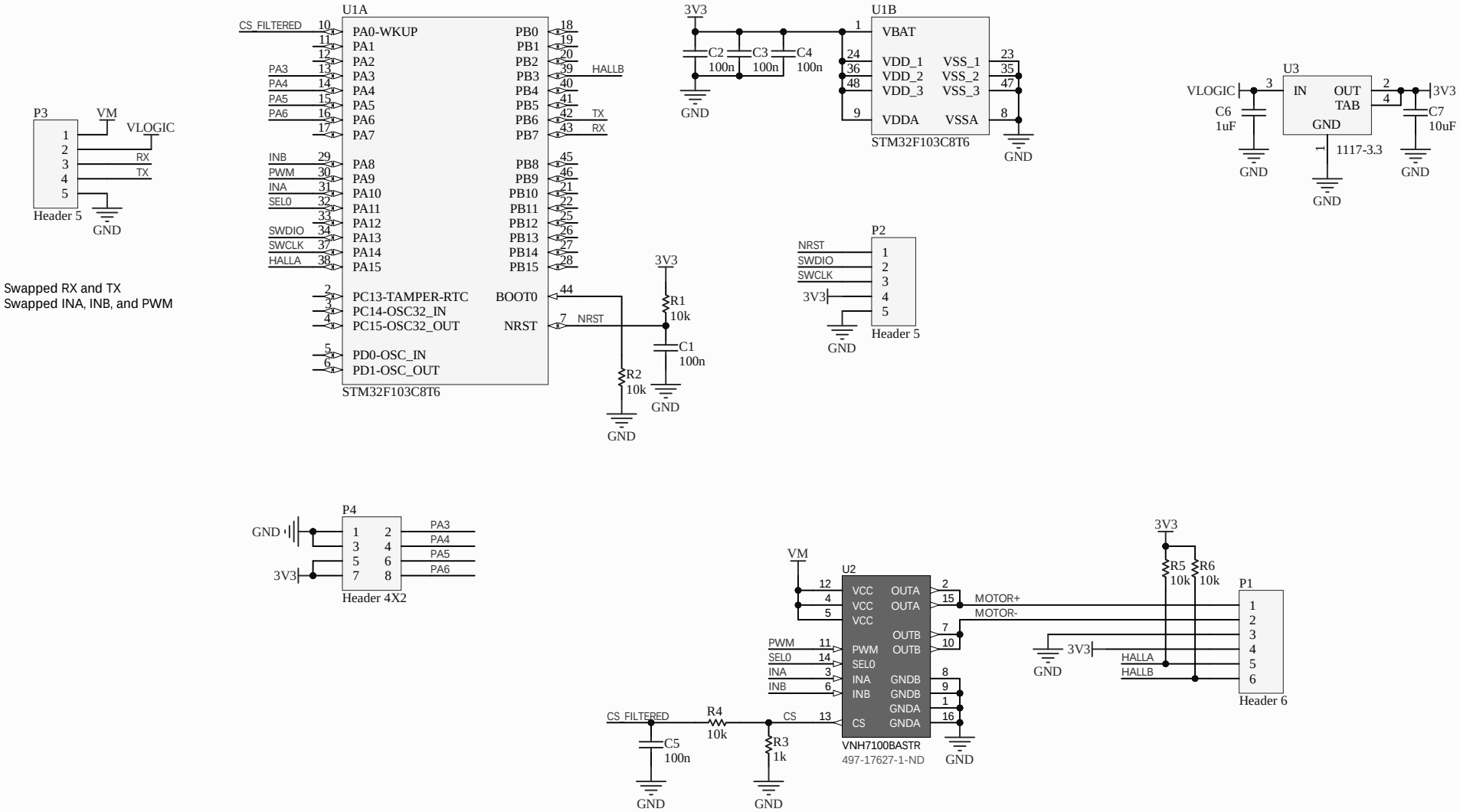

Title		
Size Letter	Number	Revision
Date: 11/06/2020		Sheet of
File: F:\Git\..\stm32-motor-driver.SchDoc		Drawn By:

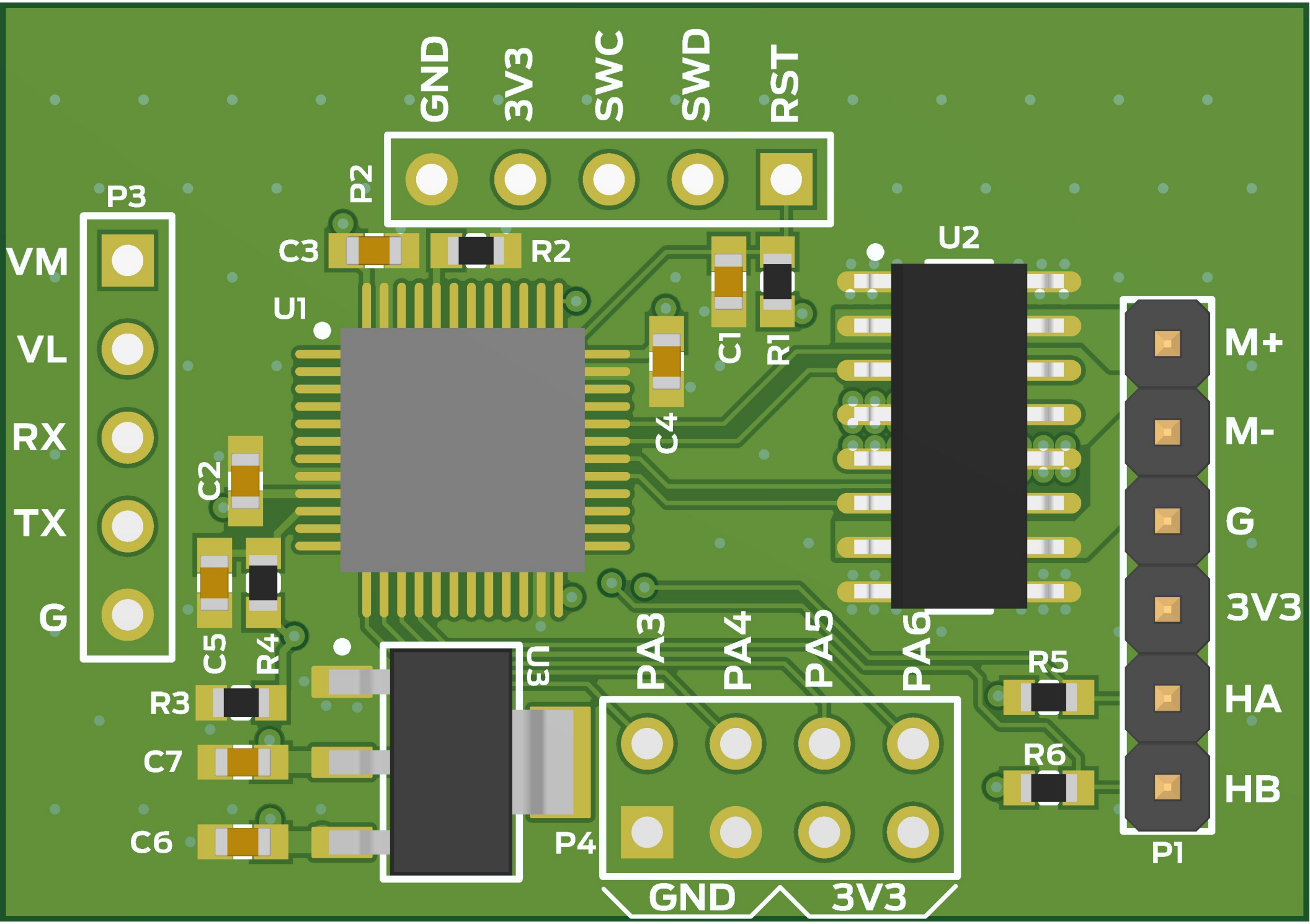
GND
3V3
SWC
SWD
RST
P2
P3
VM
VL
RX
TX
G
C3
R2
U1
C1
R1
U2
C4
C2
C5
R4
R3
C7
C6
U3
PA3
PA4
PA5
PA6
R5
R6
P4
GND
3V3
M+
M-
G
3V3
HA
HB
P1