SEWOSY EDITION 15

INNOVATING FOR SECURITY

SEWOSY

4 full ranges

ACCESS CONTROL
ELECTRIC AND ELECTROMAGNETIC LOCKS
FIRE SECURITY
ACCESSORIES
Optimal equipment of your access

EDITION 15

Edito

This 12th version of our catalog reflects the **powerful dynamic** that drives SEWOSY since the beginning of its second decade. These last years were indeed placed under the sign of **renewal**!

After the launches of our entirely **redesigned graphic chart** in 2012 and of our **new website www.sewosy.eu/en** in 2013, our brand universe was enriched by the most modern means of communication.

Our blog for "the experts of low current" (http://blog.sewosy.eu, the English version will be available soon) proposes some articles and videos about technical aspects of our products, choices of product combination depending on configurations, advices and tricks to optimize the installations... We are also on the Social Media, especially on **Twitter, YouTube, LinkedIn, Viadeo**, in order to share information with our clients and institutional partners.
Besides, the year 2015 got off to a flying start! Indeed, we moved into larger premises in the aim of offering our customers an ever more complete and responsive service.

In addition, the efforts made to create eco-friendly products were rewarded by two trophies: Trophy Eco-design Alsace 2014 and Trophy interregional Eco-design North-East 2014.

This success is those of all members of SEWOSY team, but is also yours, **because our approach is to implement the solutions YOU are looking for**. We thank you for your confidence and hope you will enjoy this edition 15 of our catalog!

Jacques Wolff, CEO

@sewosy

YouTube channel SEWOSY67

CONTENTS

ELECTRIC LOCKS 4
ACCESS CONTROL 201
ACCESSORIES 223
FIRE SECURITY 288
INDEX 305

NORMS

NF S 61-937

"This standard is part of a set of standards aiming to ensure the ability to function of the technical equipment constituting a system contributing to the security against fire risks and panic. It relates more particularly to actuate devices for security, allowing to ensure Subdivision, Smoke extraction and Evacuation" (© AFNOR 1990).

A DAS is defined in France as a "controlled device which, by change of state, participates directly and locally in setting fire safety of a building or facility within the fire safety system" ("Système de Mise en Sécurité Incendie", SMSI).

The SEWOSY products standardized NF S 61-937 relate to the evacuation. They comply with the NF S 61-937 standard of December 1990, Appendix A, sheet XIV.

EN 1155 or NF EN 1155 (EN 1155 : 1997/A1 : 2002 +/ AC : 2006)

Standard applied to electromagnetic door holder devices for swinging doors used for fire and smoke-tight doors, when they are recognized complying with the Directive "Construction products" (8911061CEE) and are CE marked.

"The NF S 61-937 standard of 1990, applicable to DAS systems, was revised in December 2003. The new standard NF S 61-937-2, applicable to self-closing swinging doors of subdivision with intrinsic energy, now requires the compliance with European standards for some elements of hardware such as:

- NF EN 1155 for restraint devices for swing doors."

TÜV

A TÜV (Technischer Überwachungs-Verein) is an organization, independent and worldwide present, which delivers certificates of compliance DIN, EN and ISO in an environment protection and human health perspective.

MPA

A MPA (Materialprüfungsamt) is a test report DIN, EN or ISO made by an independent German organism.

VdS

The VdS (Verband der Sachversicherer) is an independent office of test and certification, accredited for protection against fire and forced entries. Members of the non-life insurers association, the Vds are reputed to be amongst the most demanding in terms of quality and security.

CAPTION

- Supply voltage AC/DC
- Supply voltage AC
- Supply voltage DC
- Consumption AC/DC
- Consumption AC
- Consumption DC
- Switching capability
- Temperature
- Holding force in DaN
- IP rating
- Weight
- Time delay
- Voltage DC LED
- Input voltage
- Output voltage
- Current DC
- Output current
- Power in Watt
- Fuse
- Max. detection distance in mm
- Users
- Cable section
- Compliant with NF S 61-937
- Compliant with NF S 61-937 in 24V DC
- Compliant with NF S 61-937 in 48V DC
- Compliant with NF S 61-937 in 24V DC and 48V DC
- Low consumption symbol
- Products for outdoor installation

REGISTERED TRADEMARKS

SEWOSY®
CPREG™
ROUREG™
VELMAG™

ELECTRIC LOCKS

ELECTRIC LOCKS

MORTISE ELECTRIC STRIKES....8

ROUREG™ ELECTRIC STRIKES.... 8
FACE PLATES AND ACCESSORY FOR ROUREG™ ELECTRIC STRIKES 20
ROUREG™ NARROW ELECTRIC STRIKES.... 22
FACE PLATES FOR ROUREG™ NARROW ELECTRIC STRIKES.... 28
ROUREG™MINI ELECTRIC STRIKES.... 30
FACE PLATES FOR ROUREG™ MINI ELECTRIC STRIKES.... 35
ANGLE FACE PLATES FOR ROUREG™ MINI ELECTRIC STRIKES 36
FT ELECTRIC STRIKES.... 38
FACE PLATES FOR FT ELECTRIC STRIKES.... 42
SHORT ANGLE REVERSIBLE FACE PLATES FOR FT ELECTRIC STRIKES 43
LONG ANGLE FACE PLATES FOR FT ELECTRIC STRIKES.... 44
FLUSH-MOUNT COUNTERPART FOR ROUREG™ ELECTRIC STRIKES 45
GDES400 ELECTRIC STRIKE FOR GLASS DOORS.... 46

PANIC ELECTRIC STRIKES....50

PANIC PM ELECTRIC STRIKES.... 52
PANIC GM ELECTRIC STRIKES 56

SURFACE ELECTRIC STRIKES....60

MODEL 90 FOR HORIZONTAL LOCKS 62
MODEL 120 FOR VERTICAL LOCKS.... 64

SPECIFIC MORTISE ELECTRIC STRIKES....66

ELECTRIC STRIKES WITH INTERNAL MECHANICAL MEMORY.... 66
FACE PLATES FOR ELECTRIC STRIKES (with internal mechanical memory).... 69
STANDARD ELECTRIC STRIKES SE SERIES 70
FACE PLATES FOR STANDARD ELECTRIC STRIKES.... 78

VELMAG™ ELECTROMAGNETIC LOCKS....80

MORTISE EM LOCKS 150 DaN 82
MORTISE EM LOCKS 300 DaN.... 83
MORTISE EM LOCKS 35 MM - 300 DaN without stainless steel body.... 84
MORTISE EM LOCKS 35,5 MM - 300 DaN with stainless steel body 85
MORTISE EM LOCKS 500 DaN.... 86
MORTISE EM LOCKS 540 AND 1000 DaN - SHEARLOCK 87
NF S 61-937 MORTISE EM LOCKS 300 DaN.... 90
NF S 61-937 MORTISE EM LOCKS 300 DaN FOR NARROW PROFILES 91
SURFACE EM LOCKS 150 DaN 94
SURFACE DOUBLE EM LOCKS 150 DaN.... 95
ACCESSORIES FOR SURFACE EM LOCKS 150 DaN 96
SURFACE EM LOCKS 300 DaN - NF S 61-937 COMPLIANT 98
SURFACE DOUBLE EM LOCKS 300 DaN - NF S 61-937 COMPLIANT.... 99
ACCESSORIES FOR SURFACE EM LOCKS 300 DaN 100
SURFACE EM LOCKS 500 DaN - NF S 61-937 COMPLIANT 104
SURFACE EM LOCKS 500 DaN / 48V - NF S 61-937 COMPLIANT.... 105
SURFACE DOUBLE EM LOCKS 500 DaN - NF S 61-937 COMPLIANT.... 106
SURFACE DOUBLE EM LOCKS 500 DaN / 48V - NF S 61-937 COMPLIANT.... 107
ACCESSORIES FOR SURFACE EM LOCKS 500 DaN 108
SURFACE EM LOCKS WITH STAINLESS STEEL BODY 180 DaN 114
ACCESSORIES FOR SURFACE EM LOCKS with stainless steel body 180 DaN.... 115
SURFACE EM LOCKS WITH STAINLESS STEEL BODY 370 DaN 116
ACCESSORIES FOR SURFACE EM LOCKS with stainless steel body 370 DaN.... 117
NF S 61-937 SURFACE EM LOCKS WITH STAINLESS STEEL BODY 370 DaN.... 118
KITS FOR NF S 61-937 SURFACE EM LOCKS with stainless steel body 370 DaN.. 119
SURFACE EM LOCKS WITH STAINLESS STEEL BODY 530 DaN 120
ACCESSORIES FOR SURFACE EM LOCKS with stainless steel body 530 DaN.... 121
TABLE OF IP CODE 122

CPREG™ ELECTROMAGNETIC HANDLES 123

CPREG™-1 ELECTROMAGNETIC HANDLES 3000 MM 124
CPREG™-1 ELECTROMAGNETIC HANDLES 2500 MM 126
CPREG™-1 ELECTROMAGNETIC HANDLES 600 MM 128
CPREG™-1 ELECTROMAGNETIC HANDLES 400 MM 130
CPREG™-1 ELECTROMAGNETIC HANDLES - SERVICES.... 132
CPREG™-2 ELECTROMAGNETIC HANDLES 3000 MM 136
CPREG™-2 ELECTROMAGNETIC HANDLES 2500 MM 138
CPREG™-2 ELECTROMAGNETIC HANDLES 2200 MM 140
CPREG™-2 ELECTROMAGNETIC HANDLES 600 MM 142
CPREG™-2 ELECTROMAGNETIC HANDLES 400 MM 144
CPREG™-2 ELECTROMAGNETIC HANDLES - SERVICES.... 146
CPREG™-3 ELECTROMAGNETIC HANDLES 4 SEGMENTS - 2 EM LOCKS.... 150
CPREG™-3 ELECTROMAGNETIC HANDLES 2 SEGMENTS - 2 EM LOCKS.... 151
CPREG™-3 ELECTROMAGNETIC HANDLES 1 SEGMENT - 1 EM LOCK.... 152
CPREG™-3 ELECTROMAGNETIC HANDLES KIT S2V2 - 2 EM LOCKS 153
CPREG™-3 ELECTROMAGNETIC HANDLES KIT S2V1 - 1 EM LOCK.... 154
CPREG™-3 ELECTROMAGNETIC HANDLES KIT S2NU.... 155
CPREG™-3 ELECTROMAGNETIC HANDLES KIT S1V1 - 1 EM LOCK.... 156
CPREG™-3 ELECTROMAGNETIC HANDLES KIT S1NU.... 157
CPREG™-3 ELECTROMAGNETIC HANDLES - SPARE PARTS / SERVICES.... 158
CPREG™-4 ELECTROMAGNETIC HANDLES 4 SEGMENTS - 2 EM LOCKS.... 162
CPREG™-4 ELECTROMAGNETIC HANDLES 2 SEGMENTS - 2 EM LOCKS.... 163
CPREG™-4 ELECTROMAGNETIC HANDLES 1 SEGMENT - 1 EM LOCK.... 164
CPREG™-4 ELECTROMAGNETIC HANDLES KIT S2V2 - 2 EM LOCKS 165
CPREG™-4 ELECTROMAGNETIC HANDLES KIT S2V1 - 1 EM LOCK.... 166
CPREG™-4 ELECTROMAGNETIC HANDLES KIT S2NU.... 167
CPREG™-4 ELECTROMAGNETIC HANDLES KIT S1V1 - 1 EM LOCK.... 168
CPREG™-4 ELECTROMAGNETIC HANDLES KIT S1NU.... 169
CPREG™-4 ELECTROMAGNETIC HANDLES - SPARE PARTS / SERVICES.... 170
CPREG™-5 ELECTROMAGNETIC HANDLES 4 SEGMENTS - 2 EM LOCKS.... 172
CPREG™-5 ELECTROMAGNETIC HANDLES 2 SEGMENTS - 2 EM LOCKS.... 173
CPREG™-5 ELECTROMAGNETIC HANDLES 1 SEGMENT -1 EM LOCK.... 174
CPREG™-5 ELECTROMAGNETIC HANDLES KIT S2V2 - 2 EM LOCKS 175
CPREG™-5 ELECTROMAGNETIC HANDLES KIT S2V1 - 1 EM LOCK.... 176
CPREG™-5 ELECTROMAGNETIC HANDLES KIT S2NU.... 177
CPREG™-5 ELECTROMAGNETIC HANDLES KIT S1V1 - 1 EM LOCK.... 178
CPREG™-5 ELECTROMAGNETIC HANDLES KIT S1NU.... 179
CPREG™-5 ELECTROMAGNETIC HANDLES - SPARE PARTS / SERVICES.... 180

LOW CONSUMPTION ELECTROMAGNETIC LOCKS 182

FIXING BY REAR PRESS SCREW.... 184
FIXING BY CASING.... 185

VERY LOW CONSUMPTION ELECTROMAGNETIC LOCKS....186

FIXING BY CASING.... 186

VELMAG™ ROUND ELECTROMAGNETIC LOCKS 188

VR SERIES 190

DOOR LOCKS 191

ELECTRIC DROPBOLTS 192
DOUBLE ACTION LOCKS 195

COMPACT ELECTROMAGNETIC BOLT....198

CEB200 200

ELECTRIC LOCKS SELECTION GUIDE

HOW AND WHY?

A first choice criterion is the most suitable operating mode for the installation:

▶ 1. Fail secure

Locked at rest, the product is released when powered on. This operating mode is particularly suitable for the security of goods, as doors stay locked in case of power outage.

▶ 2. Fail secure with stationary contact

Unlocking is caused by power on and remains till the door is open. Like the "fail-secure" mode, the product is locked at rest. Also called "two times", this working way is mainly used for building entrances.

▶ 3. Fail safe

In that case the powering on causes the locking, the product is unlocked at rest. This operating mode is specifically suitable for people safety, as doors remain unlocked in event of power failure. Thus, a vast majority of products in compliance with the standard NF S 61-937 are "fail-safe".

FOR WHOM? WHICH APPLICATION? WHICH SECURITY?

There are three families of locking products: the ROUREG™ electric strikes, the VELMAG™ electromagnetic locks and the CPREG™ electromagnetic handles.

▶ The electric strike, safe bet of electric locking

Always associated with a latch, the electric strike is therefore an electromechanical locking system. This product is usually installed in the door frame, which requires to practice a reservation. All trades concerning the door may be interested in this product, however the electric strike is especially prized by carpenters and locksmiths.

Benefits:

• Reliable, space-saving and economic product
• Great variety of operating mode and many options covering a wide range of user needs
• The electric strikes from the ROUREG™ (which means adjustable latch) series offer a reduced aperture offset and a possibility of adjusting the latch (according to the 3 to 4 mm versions), the electric strikes are generally mounted by carpenters and locksmiths.

Expert's corner:

♦ *As an electromechanical product, the electric strike must be fitted in an optimum way with respect to its counterpart (here, a latch). The product can otherwise be put under stress and have difficulties to unlock. Such a case notably occurs when the door works, affected by weather conditions. Additionally, wear of mechanical parts is more important than those of an electromagnetic product.*

♦ *An electric strike can run:*

- with AC/DC (alternating or direct current), but can't be continuously fed as the supply duration must not exceed 45 seconds
- with DC (only with direct current) and be permanently supplied, without time limitation.

Right questions to ask yourself:

• What kind of access do I need to secure?
  ◦ For inside doors: ROUREG™ electric strikes, VELMAG™ electromagnetic locks or CPREG™ electromagnetic handles*
  ◦ For outside doors: VELMAG™ electromagnetic lock from EXT range, standard electric strikes*
  ◦ For double action doors: VELMAG™ Shearlock electromagnetic locks*

► The electromagnetic lock, suitable for many configurations

This locking product, which usually runs in "fail-safe", is made of two parts: the lock (magnet) and its armature plate which is "magnetized" by the magnet. There are two big families of electromagnetic locks:

• Flush-mount electromagnetic locks, preferred by carpenters and locksmiths

• Surface-mount electromagnetic locks, the best choice for electricians and specialists of low current, as they don't need to make a reservation in the door.

Benefits:

• Reliable product, easy mounting and adjustment

• Depending on available space on the door and the wished result, the electromagnetic locks can be multiplied to increase the holding force, as the range goes from 150 DaN to more than 500 DaN per lock

• Wide variety of the electromagnetic locks range covering the needs of all trades

• The product, according to its versions, is particularly indicated for a mounting on emergency exits. Make sure beforehand that the selected lock is in accordance with the NF S 61-937 or seek advice from your Commercial!

Expert's corner:

The electromagnetic lock requires a fine adjustment to ensure an optimum holding force. In addition, all SEWOSY electromagnetic locks from the VELMAG™ brand offer an easy connection by screw terminal block.

► The electromagnetic handle, universal!

This locking product is made of two parts:

• The "square" profile accommodating one or several electromagnetic locks fixed on the door frame,

• The "handle" profile comprising the armature plates fixed on the door and also used as pulling handle…

The electromagnetic handle is the ideal compromise between the flush-mount electromagnetic lock, discreet, and the surface-mount, quick and easy to fit. Customizable, the product nearly disappears in the installation and is additionally easy to lay and connect…

Benefits:

• Aesthetic and simple, this universal product is suitable for all professionals: carpenters, electricians, specialists of low current, etc.

• No visible screw once the door is closed

• The CPREG™ range can be equipped by 1 to 4 electromagnetic locks for a better effort sharing, notably during a vandalism attempt

• The armature plates fitting of the CPREG™ range allows a fine adjustment to guarantee a perfect alignment between the lock and its armature plate

• The electromagnetic handle thoroughly suits the door height, either by cutting again for the CPREG™ 1 and 2 versions, or by adding segments for the CPREG™ 3, 4 and 5 versions.

Expert's corner:

This locking product offers a more or less important overall congestion depending to its length. With the new generation of CPREG™ 3, 4 and 5 electromagnetic handles, this issue was settled by the product modularity, which can be easily carried in a car trunk! Additionally, the range of the CPREG™ 3, 4 et 5 does not need any cut to fit the door height due to its innovative and patented system of segments...

For a custom support to choice, please contact your Commercial or **send your questions by mail at info@ sewosy.com!**

We will reply you as soon as possible.

Right questions to ask yourself:

• What is the desired level of security?

- ◦ Sensitive access doors: safety electric strikes from the FT range*
- ◦ Building door entrances : VELMAG™ flush-mount electromagnetic locks or CPREG™ electromagnetic handles*
- ◦ Emergency exit doors: surface-mount electromagnetic locks VELMAG™*

**non-exhaustive list of examples*

The electric strikes from ROUREG™ series can be built-in most existing profiles and are especially easy to install. Their reduced aperture offset obviates to perform an additional cutting to allow the rotation of the latch.

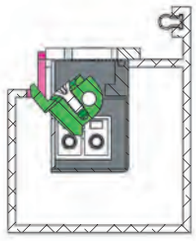

Cutting area of standard electric strike

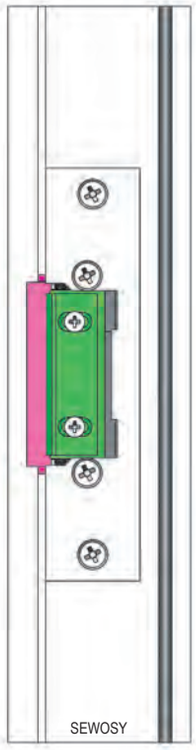

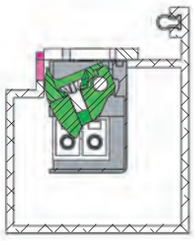

Cutting area of electric strike from ROUREG™ range

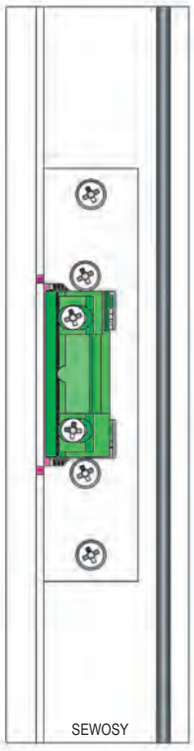

ROUREG™ ELECTRIC STRIKES

500 DaN *

* Maximal theoretical holding forces, for an implementation meeting the optimum laying conditions

- Symmetrical
- **Adjustable strike body**
- Adjustable latch (3 mm) and reduced aperture offset
- **More than 300 000 opening cycles guaranteed**

1 ROUREG™

fail secure (power to open)

- Adjustable latch (3 mm) and reduced aperture offset
- Reversible and symmetrical
- Over 300 000 opening cycles guaranteed

SE000222

CHARACTERISTICS

Dimensions H x W x D	70,8 x 20,5 x 29,5 mm		
V AC/DC	8-12V AC/DC 24V AC/DC	ImA AC/DC	700-960 mA 390-490 mA
V DC	12V DC 24V DC	ImA DC	200 mA 120 mA
°C	-10 +60 °C	DaN	500*

* Maximal theoretical holding forces, for an implementation meeting the optimum laying conditions

SE000222	Electric strike 1 ROUREG 8-12 V AC/DC fail secure	0,2 kg
SE000225	Electric strike 1 ROUREG 12 V DC fail secure	0,2 kg
SE000227	Electric strike 1 ROUREG 24V AC/DC fail secure	0,2 kg
SE000226	Electric strike 1 ROUREG 24V DC fail secure	0,2 kg

Customs code
83014019

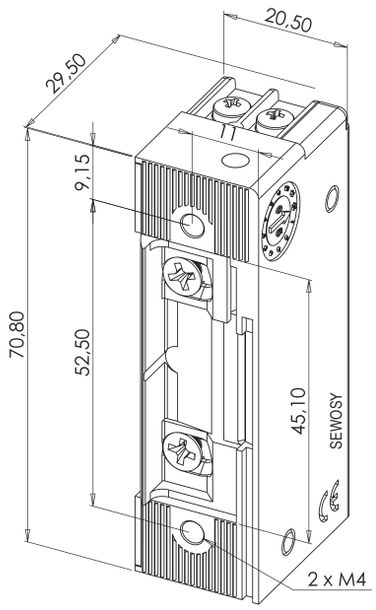

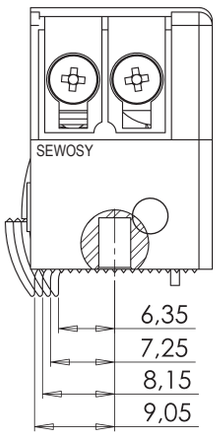

1 ROUREG™ DIODE

fail secure (power to open)

- Diode protecting against self effect
- Adjustable latch (3 mm) and reduced aperture offset
- Reversible and symmetrical
- Over 300 000 opening cycles guaranteed

SE000243

CHARACTERISTICS

Dimensions H x W x D	70,8 x 20,5 x 29,5 mm		
V DC	12V DC 24V DC	ImA DC	200 mA 120 mA
°C	-10 +60 °C	DaN	500*

* Maximal theoretical holding forces, for an implementation meeting the optimum laying conditions

SE000243	Electric strike 1 ROUREG diode 12 V DC fail secure	0,2 kg	
SE000244	Electric strike 1 ROUREG diode 24V DC fail secure	0,2 kg	Customs code 83014019

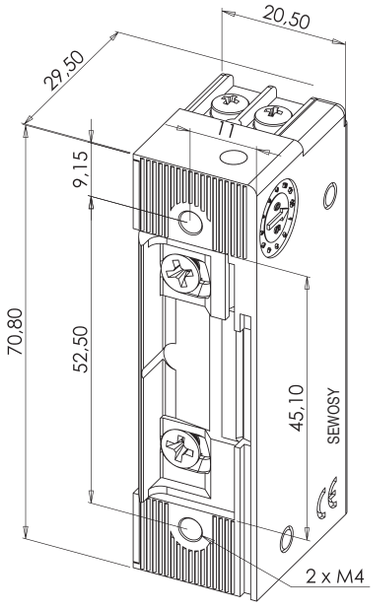

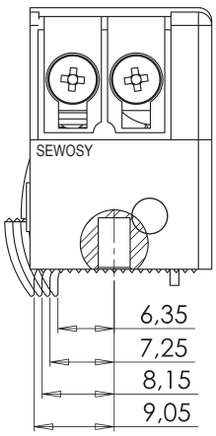

1 ROUREG™ OPEM

fail secure (power to open)

- Permanent opening by mechanical deactivation (OPEM lever)
- Adjustable latch (3 mm) and reduced aperture offset
- Reversible and symmetrical
- Over 300 000 opening cycles guaranteed

SE000228

CHARACTERISTICS

Dimensions H x W x D	70,8 x 20,5 x 29,5 mm		
V AC/DC	8-12V AC/DC 24V AC/DC	ImA AC/DC	700-960 mA 390-490 mA
V DC	12V DC 24V DC	ImA DC	200 mA 120 mA
°C	-10 +60 °C	DaN	500*

* Maximal theoretical holding forces, for an implementation meeting the optimum laying conditions

SE000228	Electric strike 1 ROUREG OPEM 8-12 V AC/DC fail secure	0,2 kg	
SE000231	Electric strike 1 ROUREG OPEM 12 V DC fail secure	0,2 kg	
SE000229	Electric strike 1 ROUREG OPEM 24V AC/DC fail secure	0,2 kg	
SE000232	Electric strike 1 ROUREG OPEM 24V DC fail secure	0,2 kg	Customs code 83014019

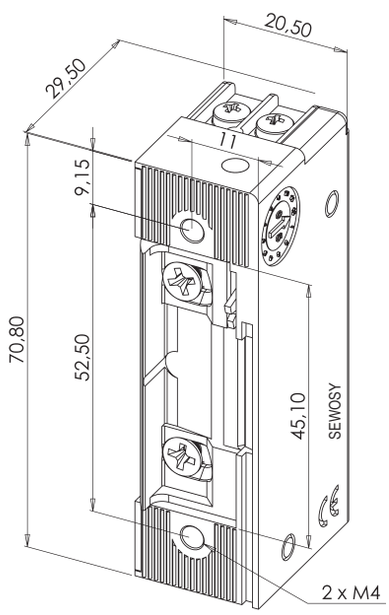

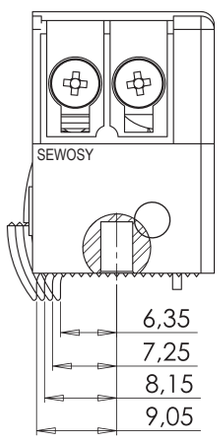

1 ROUREG™ OPEM DIODE

fail secure (power to open)

- Permanent opening by mechanical deactivation (OPEM lever)
- Diode protecting against self effect
- Adjustable latch (3 mm) and reduced aperture offset
- Reversible and symmetrical
- Over 300 000 opening cycles guaranteed

SE000237

CHARACTERISTICS

Dimensions H x W x D	70,8 x 20,5 x 29,5 mm		
V DC	12V DC 24V DC	ImA DC	200 mA 120 mA
°C	-10 +60 °C	DaN	500*

* Maximal theoretical holding forces, for an implementation meeting the optimum laying conditions

SE000237	Electric strike 1 ROUREG OPEM diode 12 V DC fail secure	0,2 kg	
SE000238	Electric strike 1 ROUREG OPEM diode 24V DC fail secure	0,2 kg	Customs code 83014019

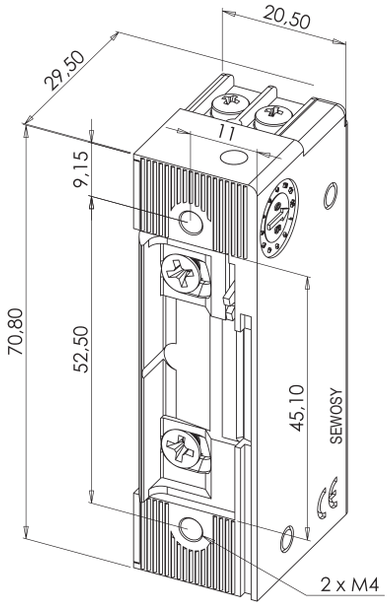

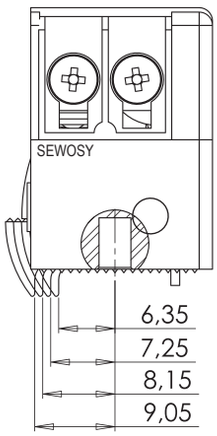

1 ROUREG™ CONTACT

fail secure (power to open)

- Open or closed door position sensor
- Adjustable latch (3 mm) and reduced aperture offset
- Reversible and symmetrical
- Over 300 000 opening cycles guaranteed

SE000246

CHARACTERISTICS

Dimensions H x W x D	79,8 x 20,5 x 29,5 mm		
V AC/DC	8-12V AC/DC 24V AC/DC	ImA AC/DC	700-960 mA 390-490 mA
V DC	12V DC 24V DC	ImA DC	200 mA 120 mA
V/A	125V AC-0,1 A 12V DC-2 A	DaN	500*
°C	-10 +60 °C		

* Maximal theoretical holding forces, for an implementation meeting the optimum laying conditions

SE000246	Electric strike 1 ROUREG 12 V AC/DC + contact fail secure	0,2 kg	
SE000249	Electric strike 1 ROUREG 12 V DC + contact fail secure	0,2 kg	
SE000250	Electric strike 1 ROUREG 24V DC + contact fail secure	0,2 kg	
SE000251	Electric strike 1 ROUREG 24V AC/DC + contact fail secure	0,2 kg	Customs code 83014019

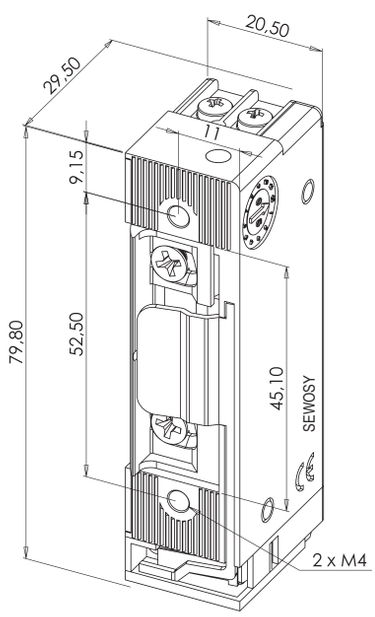

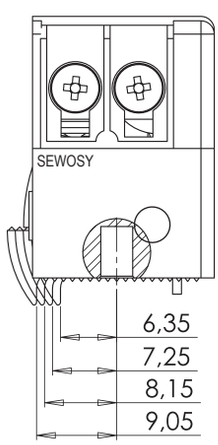

1 ROUREG™ DIODE CONTACT

fail secure (power to open)

- Open or closed door position sensor
- Diode protecting against self effect
- Adjustable latch (3 mm) and reduced aperture offset
- Reversible and symmetrical
- Over 300 000 opening cycles guaranteed

SE000261

CHARACTERISTICS

Dimensions H x W x D	79,8 x 20,5 x 29,5 mm		
V DC	12V DC 24V DC	ImA DC	200 mA 120 mA
V/A	125V AC-0,1 A 12V DC-2 A	DaN	500*
°C	-10 +60 °C		

* Maximal theoretical holding forces, for an implementation meeting the optimum laying conditions

SE000261	Electric strike 1 ROUREG diode 12 V DC + contact fail secure	0,2 kg	
SE000262	Electric strike 1 ROUREG diode 24V DC + contact fail secure	0,2 kg	Customs code 83014019

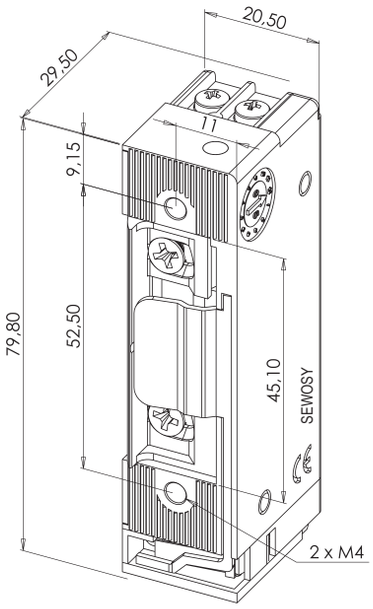

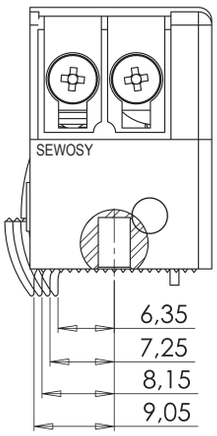

2 ROUREG™

fail secure (power to open) with mechanical memory

- Adjustable latch (3 mm) and reduced aperture offset
- Reversible and symmetrical
- Over 300 000 opening cycles guaranteed

SE000264

CHARACTERISTICS

Dimensions H x W x D	70,8 x 20,5 x 29,5 mm		
V AC/DC	8-12V AC/DC 24V AC/DC	ImA AC/DC	700-960 mA 390-490 mA
°C	-10 +60 °C	DaN	500*

* Maximal theoretical holding forces, for an implementation meeting the optimum laying conditions

SE000264	Electric strike 2 ROUREG 12 V AC/DC fail secure with memory	0,2 kg	
SE000267	Electric strike 2 ROUREG 24V AC/DC fail secure with memory	0,2 kg	Customs code 83014019

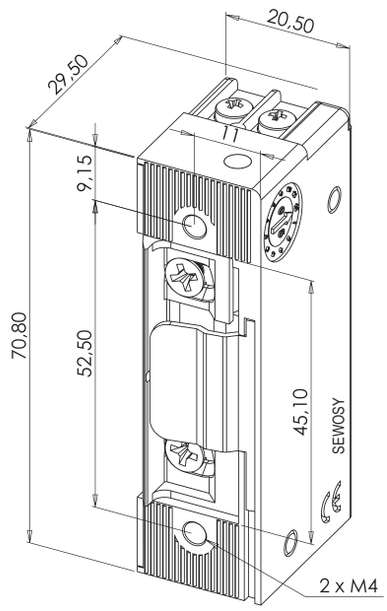

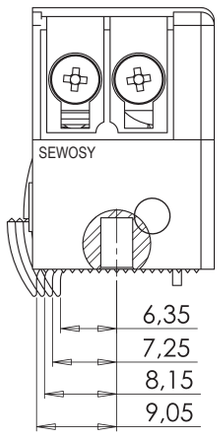

2 ROUREG™ OPEM

fail secure (power to open) with mechanical memory

- Permanent opening by mechanical deactivation (OPEM lever)
- Adjustable latch (3 mm) and reduced aperture offset
- Reversible and symmetrical
- Over 300 000 opening cycles guaranteed

SE000270

CHARACTERISTICS

Dimensions H x W x D	70,8 x 20,5 x 29,5 mm		
V AC/DC	8-12V AC/DC 24V AC/DC	ImA AC/DC	700-960 mA 390-490 mA
°C	-10 +60 °C	DaN	500*

* Maximal theoretical holding forces, for an implementation meeting the optimum laying conditions

SE000270	Electric strike 2 ROUREG OPEM 12 V AC/DC fail secure with memory	0.2 kg	
SE000273	Electric strike 2 ROUREG OPEM 24V AC/DC fail secure with memory	0.2 kg	Customs code 83014019

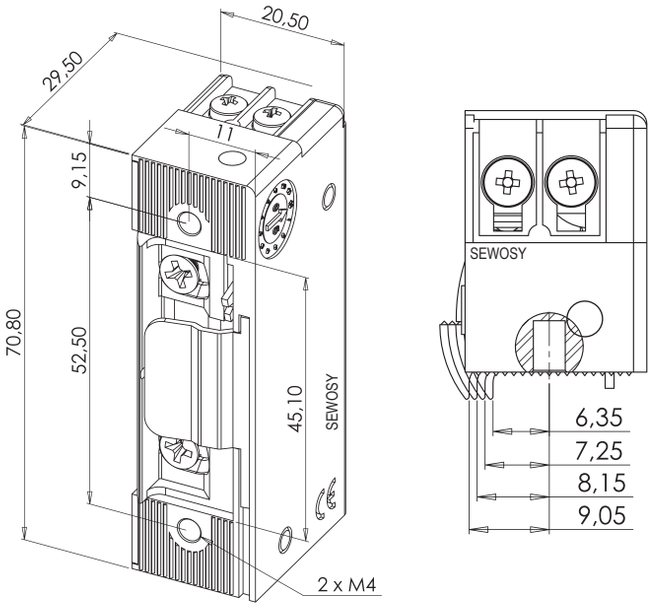

3 ROUREG™ DIODE

fail safe (power to lock)

- Diode protecting against self effect
- Adjustable latch (3 mm) and reduced aperture offset
- Reversible and symmetrical
- Over 300 000 opening cycles guaranteed

SE000297

CHARACTERISTICS

Dimensions H x W x D	70,8 x 20,5 x 29,5 mm		
V DC	12V DC 24V DC	ImA DC	200 mA 120 mA
°C	-10 +60 °C	DaN	500*

* Maximal theoretical holding forces, for an implementation meeting the optimum laying conditions

SE000297	Electric strike 3 ROUREG diode 12V DC fail safe	0.2 kg	
SE000298	Electric strike 3 ROUREG diode 24V DC fail safe	0.2 kg	Customs code 83014019

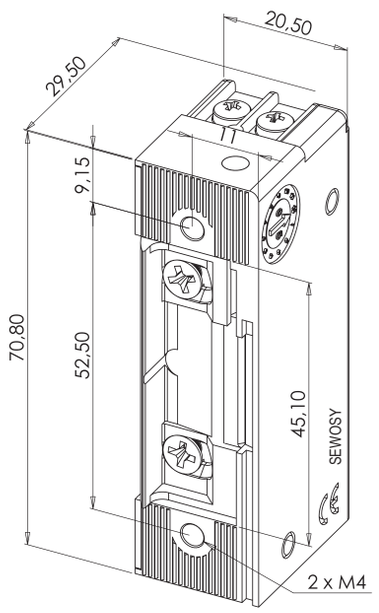

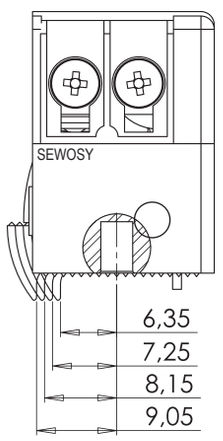

3 ROUREG™ DIODE CONTACT

fail safe (power to lock)

- Open or closed door position sensor
- Diode protecting against self effect
- Adjustable latch (3 mm) and reduced aperture offset
- Reversible and symmetrical
- Over 300 000 opening cycles guaranteed

SE000309

CHARACTERISTICS

Dimensions H x W x D	79,8 x 20,5 x 29,5 mm		
V DC	12V DC 24V DC	ImA DC	200 mA 120 mA
V/A	125V AC-0,1 A 12V DC-2 A	DaN	500*
°C	-10 +60 °C		

* Maximal theoretical holding forces, for an implementation meeting the optimum laying conditions

SE000309	Electric strike 3 ROUREG diode 12V DC + contact fail safe	0.2 kg	
SE000310	Electric strike 3 ROUREG diode 24V DC + contact fail safe	0.2 kg	Customs code 83014019

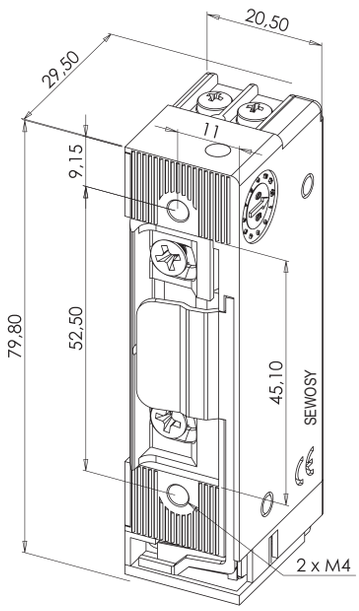

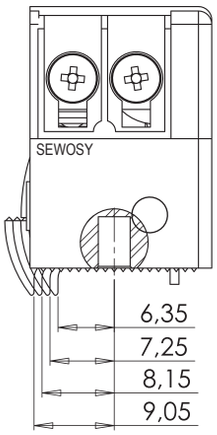

LONG FACE PLATES WITH LATCH GUIDE AND SPECIAL LATCH

for ROUREG™ mortise electric strikes

- Suitable for locks with latch bolt
- Stainless steel
- 3 fixing points

CHARACTERISTICS

Dimensions H x W x D	SEF401DG SEF401DD SEL001	245 x 24 x 3 mm 245 x 24 x 3 mm 44,20 x 17 x 7 mm

Caution:

SEF401DG/DD face plates require latch SEL001, only compatible with ROUREG™ electric strikes (20,5 mm width), except versions with microswitch (door status sensor) or mechanical memory.

SEF401DD SEF401DG SEL001

SEF401DG	Long face plate 245 mm with latch guide DIN left stainless steel	0.1 kg	
SEF401DD	Long face plate 245 mm with latch guide DIN right stainless steel	0.1 kg	
SEL001	Latch for 1 + 3 ROUREG electric strike	0.01 kg	Customs code 83014019

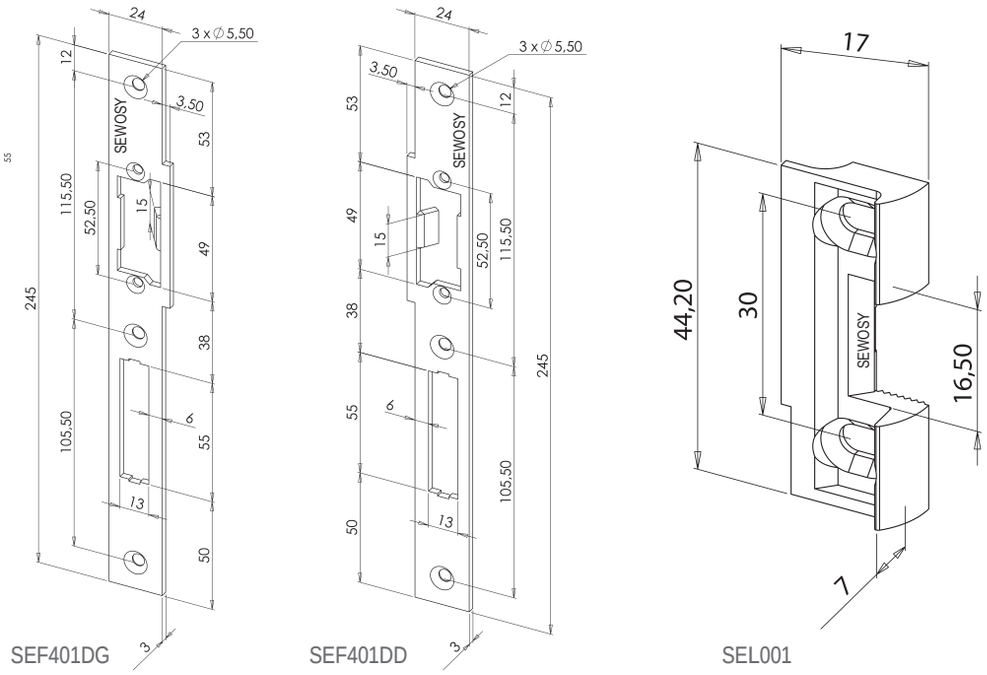

SEF401DG SEF401DD SEL001

LONG OR SHORT REVERSIBLE FACE PLATES

for ROUREG™ mortise electric strikes

- Suitable for most profiles
- Stainless steel
- 2 to 4 fixing points

SEF201 SEF203 SEF301

CHARACTERISTICS

Dimensions H x W x D	SEF201 SEF203 SEF301	250 x 25 x 3 mm 250 x 24 x 3 mm 110 x 25 x 3 mm

SEF201	Long reversible face plate 250 mm 2 holes stainless steel	0.1 kg	
SEF203	Long reversible face plate 250 mm 1 hole stainless steel	0.1 kg	
SEF301	Short reversible face plate 110 mm 1 hole stainless steel	0.1 kg	Customs code 83014019

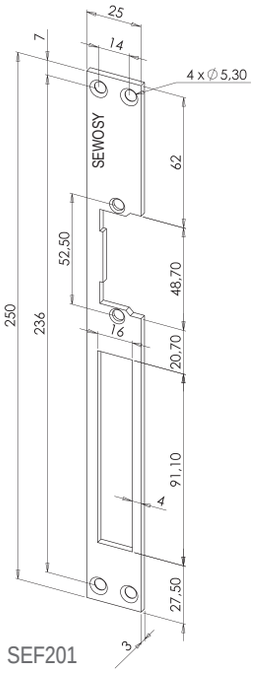

SEF201

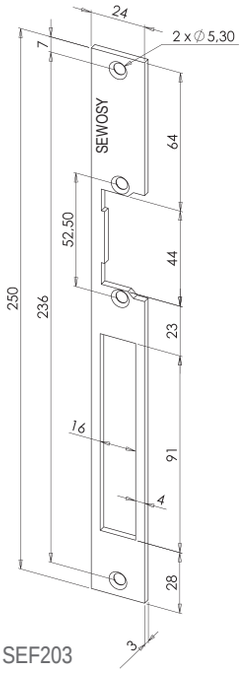

SEF203

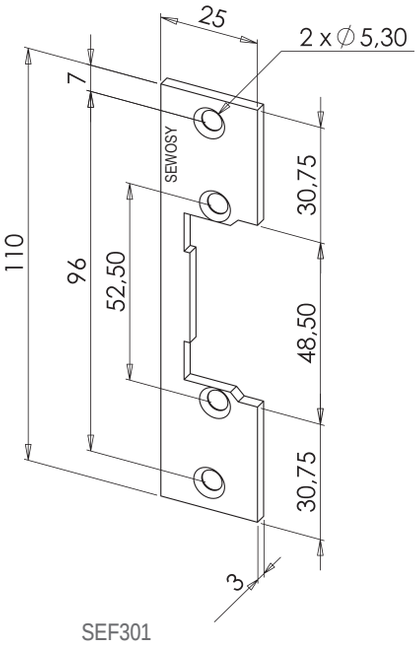

SEF301

The electric strikes from ROUREG™ narrow series were specially designed for narrow profiles. Featuring a reduced aperture offset, they are especially easy to install, as it is unnecessary to perform an additional cutting to allow the rotation of the latch.

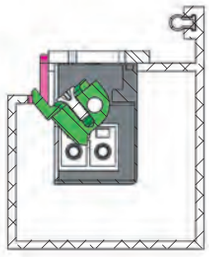

Cutting area of standard electric strike

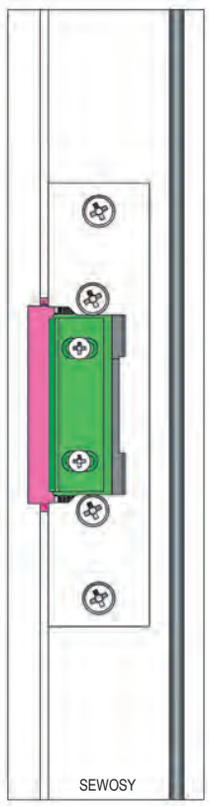

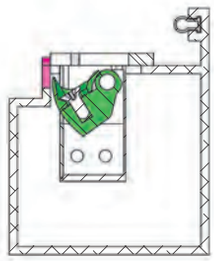

Cutting area of electric strike from ROUREG™ range

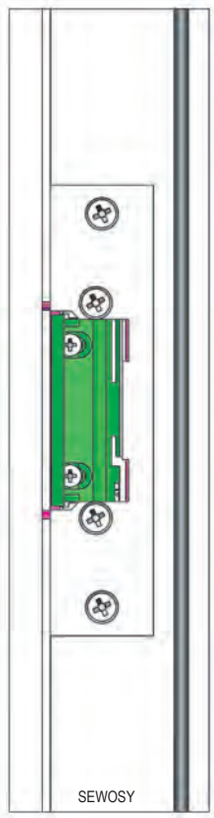

ROUREG™ NARROW ELECTRIC STRIKES

370 DaN *

* Maximal theoretical holding forces, for an implementation meeting the optimum laying conditions

- **Symmetrical**
- **Reduced dimensions**
- **Adjustable latch (2 mm) and reduced aperture offset**
- **More than 300 000 opening cycles guaranteed**

1 ROUREG™ NARROW AND 1 ROUREG NARROW DIODE

fail secure (power to open)

- Suitable for narrow profiles
- Diode protecting against self effect (except SEE1)
- Adjustable latch (2 mm) and reduced aperture offset
- Reversible and symmetrical
- Over 300 000 opening cycles guaranteed

SEE1

CHARACTERISTICS

Dimensions H x W x D	65,5 x 16 x 28,1 mm		
V AC/DC	8-12V AC/DC	ImA AC/DC	820 mA
V DC	12V DC 24V DC	ImA DC	275 mA 120 mA
°C	-10 +60 °C	DaN	370*

* Maximal theoretical holding forces, for an implementation meeting the optimum laying conditions

SEE1	Narrow electric strike 1 ROUREG 8/12V AC/DC fail secure	0.15 kg
SEE1D12	Narrow electric strike 1 ROUREG diode 12V DC fail secure	0.15 kg
SEE1D24	Narrow electric strike 1 ROUREG diode 24V DC fail secure	0.15 kg

Customs code
83014019

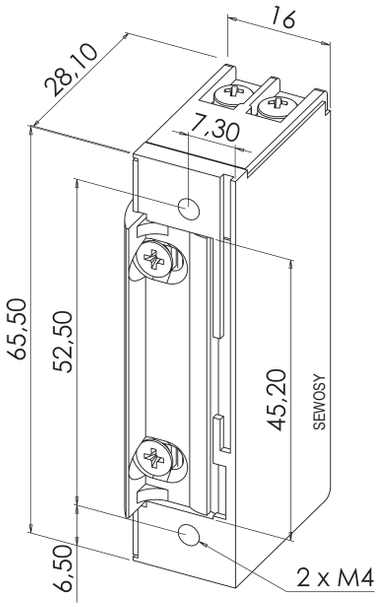

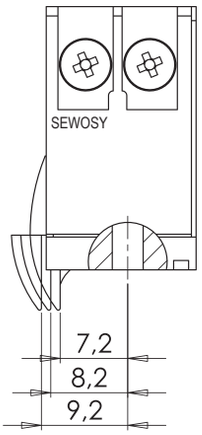

1 ROUREG™ OPEM NARROW AND 1 ROUREG™ OPEM NARROW DIODE

fail secure (power to open)

- Suitable for narrow profiles
- Permanent opening by mechanical deactivation (OPEM lever)
- Diode protecting against self effect (except SEE1L)
- Adjustable latch (3 mm) and reduced aperture offset
- Reversible and symmetrical
- Over 300 000 opening cycles guaranteed

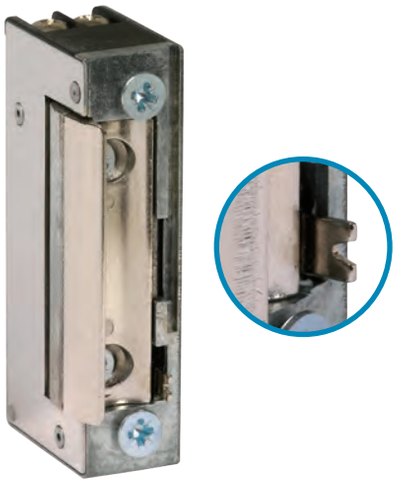

SEE1L

CHARACTERISTICS

Dimensions H x W x D	65,5 x 16 x 28,1 mm		
V AC/DC	8-12V AC/DC	ImA AC/DC	820 mA
V DC	12V DC 24V DC	ImA DC	275 mA 120 mA
°C	-10 +60 °C	DaN	370*

* Maximal theoretical holding forces, for an implementation meeting the optimum laying conditions

SEE1L	Narrow electric strike 1 ROUREG OPEM 8/12V AC/DC fail secure	0.15 kg	
SEE1LD12	Narrow electric strike 1 ROUREG OPEM + diode 12V DC fail secure	0.15 kg	
SEE1LD24	Narrow electric strike 1 ROUREG OPEM + diode 24V DC fail secure	0.15 kg	Customs code 83014019

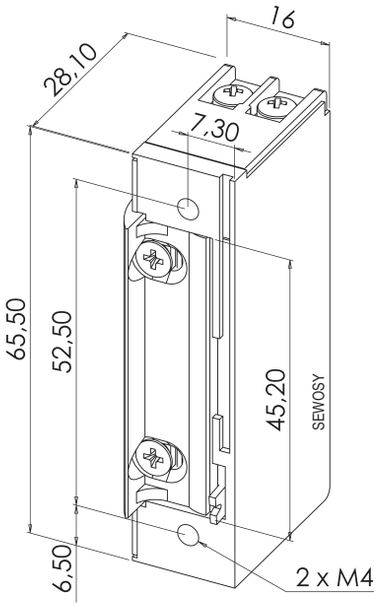

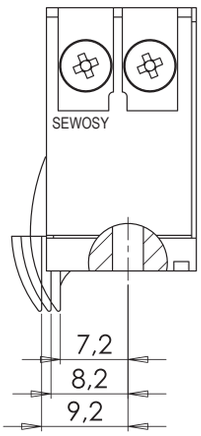

2 ROUREG™ NARROW ET 2 ROUREG™ OPEM NARROW

fail secure (power to open) with mechanical memory

- Suitable for narrow profiles
- Permanent opening by mechanical deactivation (OPEM lever)
- Adjustable latch (2 mm) and reduced aperture offset
- Reversible and symmetrical
- Over 300 000 opening cycles guaranteed

SEE2

SEE2L

CHARACTERISTICS

Dimensions H x W x D	65,5 x 16 x 28,1 mm		
V AC/DC	8-12V AC/DC	ImA AC/DC	820 mA
°C	-10 +60 °C	DaN	370*

* Maximal theoretical holding forces, for an implementation meeting the optimum laying conditions

SEE2	Narrow electric strike 2 ROUREG with memory 8/12V AC/DC	0.15 kg	
SEE2L	Narrow electric strike 2 ROUREG with memory and OPEM 8/12V AC/DC	0.15 kg	Customs code 83014019

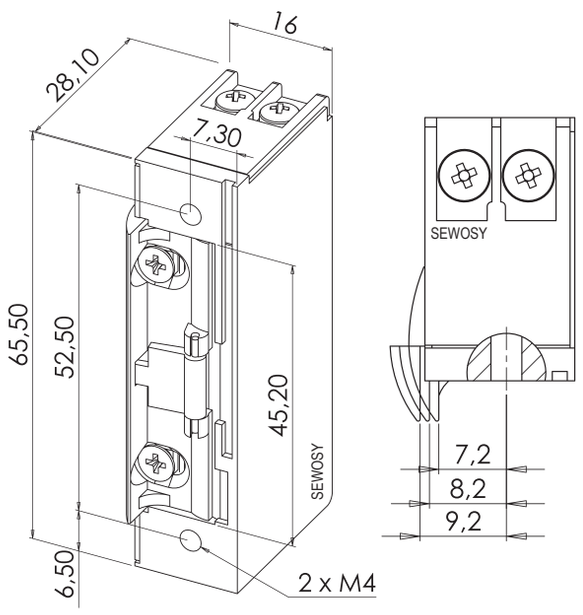

SEE2

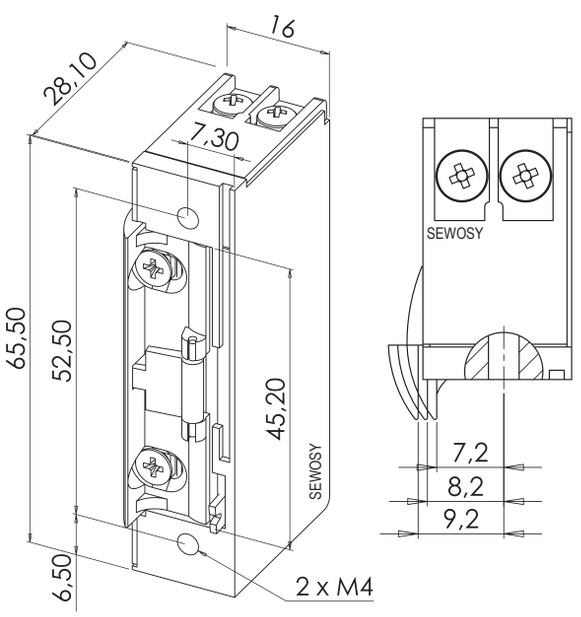

SEE2L

3 ROUREG™ NARROW

fail safe (power to lock)

- Suitable for narrow profiles
- Diode protecting against self effect
- Adjustable latch (2 mm) and reduced aperture offset
- Reversible and symmetrical
- Over 300 000 opening cycles guaranteed

SEE3D12

CHARACTERISTICS

Dimensions H x W x D	65,5 x 16 x 28,1 mm		
V DC	12V DC 24V DC	ImA DC	275 mA 120 mA
°C	-10 +60 °C	DaN	370*

* Maximal theoretical holding forces, for an implementation meeting the optimum laying conditions

SEE3D12	Narrow electric strike 3 ROUREG diode 12V DC fail safe	0.15 kg	
SEE3D24	Narrow electric strike 3 ROUREG diode 24V DC fail safe	0.15 kg	Customs code 83014019

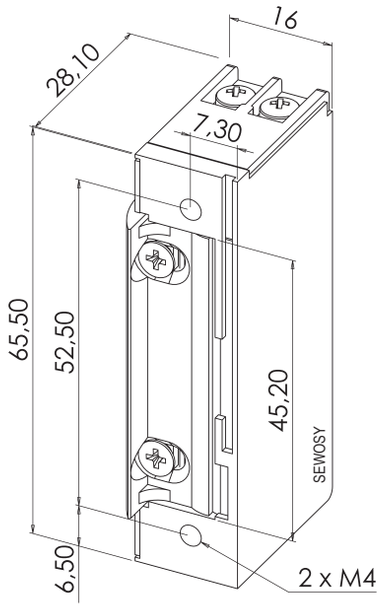

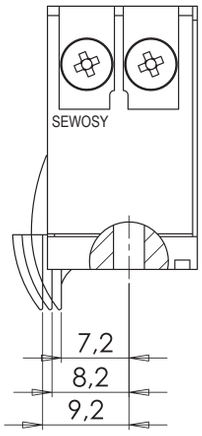

LONG OR SHORT REVERSIBLE FACE PLATES

for ROUREG™ NARROW mortise electric strikes

- Suitable for most profiles
- Stainless steel
- 2 to 4 fixing points

SEF201 SEF203 SEF301

CHARACTERISTICS

Dimensions H x W x D	SEF201 SEF203 SEF301	250 x 25 x 3 mm 250 x 24 x 3 mm 110 x 25 x 3 mm

SEF201	Long reversible face plate 250 mm 2 holes stainless steel	0.1 kg	
SEF203	Long reversible face plate 250 mm 1 hole stainless steel	0.1 kg	
SEF301	Short reversible face plate 110 mm 1 hole stainless steel	0.1 kg	Customs code 83014019

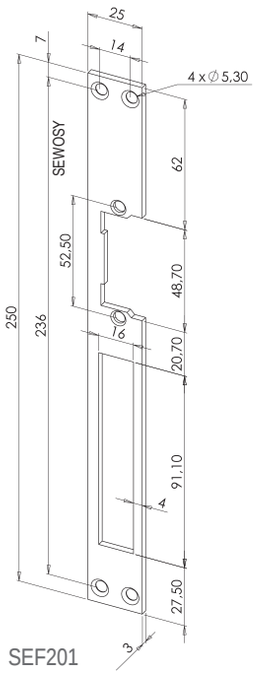

SEF201

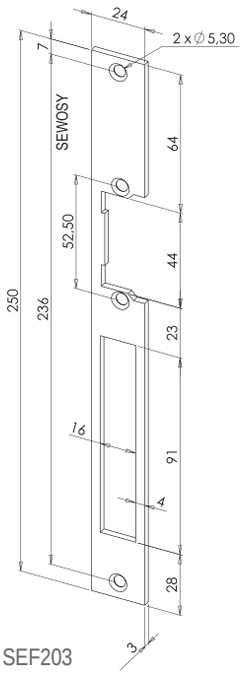

SEF203

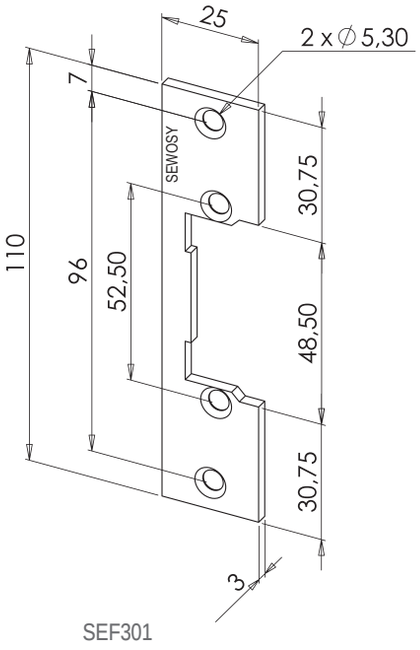

SEF301

SEWOSY is winner of the INPI* Innovation Trophies in French region of Alsace

TROPHÉES DE L'INNOVATION inpi 2012

LAURÉAT RÉGIONAL

An exemplary dynamic…

The jury wanted to highlight the remarkable innovation effort of the company, and the dimension of the environment protection included in the design of its products.

*French National Institute of industrial property

1 ROUREG™ CONTACT FOR FIRE DOORS
MINI RED SCREW TERMINAL

fail secure (power to open)

- Tri-voltage 12, 24, 48V AC/DC
- With door status contact
- Suitable for fire and smokeproof doors

CHARACTERISTICS

Dimensions H x l x P	SEM1CRCF SEF202	64,60 x 15,80 x 25,5 mm 250 x 22 x 3 mm	
V AC/DC	12-24V AC/DC	ImA AC/DC	200-400 mA
V AC	24-48V AC	ImA AC	100-200 mA
V/A	48V AC/DC - 1 A	DaN	800*
°C	-10 +60 °C		

* Maximal theoretical holding forces, for an implementation meeting the optimum laying conditions

SEM1CRCF

SEF202

SEM1CRCF	Electric strike 1 ROUREG mini red contact for fire doors 12 - 48V AC/DC - steel	0.12 kg	
SEF202	Long reversible face plate 250 mm 1 hole stainless steel	0.07 kg	Customs code 83014019

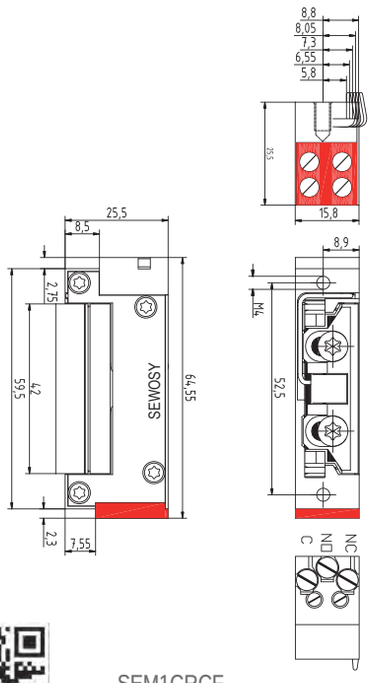

SEM1CRCF

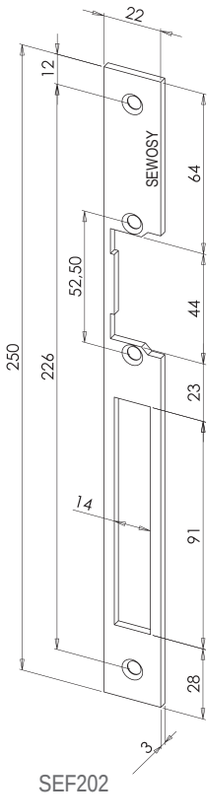

SEF202

ROUREG™ MINI ELECTRIC STRIKES

350 DaN *

- Symmetrical
- Narrowest dimensions on the market
- Adjustable latch (3 mm) and reduced aperture offset
- Integrated diode
- Horizontal or vertical mounting
- Suited for replacement of existing electric strikes
- More than 300 000 opening cycles guaranteed
- TORX® steel screws

* Maximal theoretical holding forces, for an implementation meeting the optimum laying conditions

1 ROUREG™ - 1 ROUREG™ OPEM - 1 ROUREG™ CONTACT MINI BLUE SCREW TERMINAL

fail secure (power to open)

- Tri-voltage 6, 12, 24V AC/DC
- Diode protecting against self effect
- Permanent opening by mechanical OPEM lever (SEM1LB)
- Open or closed door position sensor (SEM1CB)
- Adjustable latch (3 mm) and reduced aperture offset

SEM1LB SEM1CB

CHARACTERISTICS

Dimensions H x W x D	SEM1B / SEM1LB	61,75 x 15,8 x 25,5 mm
	SEM1CB	64,60 x 15,80 x 25,5 mm

V AC/DC	6-12V AC/DC	ImA AC/DC	400-800 mA
V AC	12-24V AC	ImA AC	200-400 mA
V/A	48V AC/DC-1A	DaN	350*
°C	-10 +60 °C		

* Maximal theoretical holding forces, for an implementation meeting the optimum laying conditions

Caution: allowed voltages (refer to technical characteristics)

SEM1B	Electric strike 1 ROUREG mini blue 6 - 24V	0.12 kg	
SEM1LB	Electric strike 1 ROUREG mini blue OPEM 6 - 24V	0.12 kg	
SEM1CB	Electric strike 1 ROUREG mini blue contact 6 - 24V	0.12 kg	Customs code 83014019

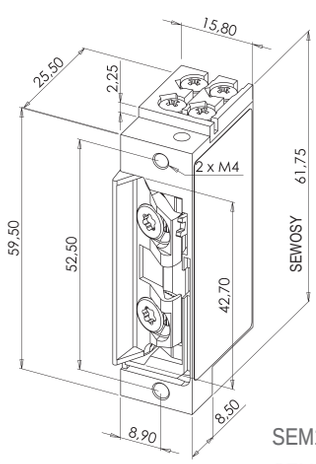

SEM1LB
SEM1B

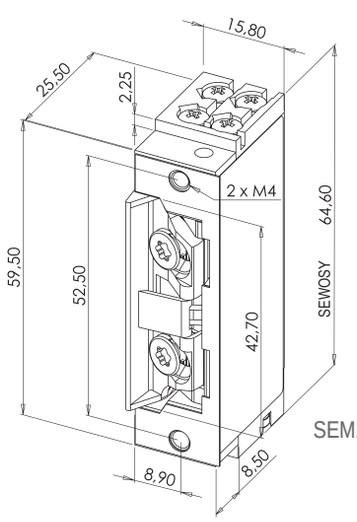

SEM1CB

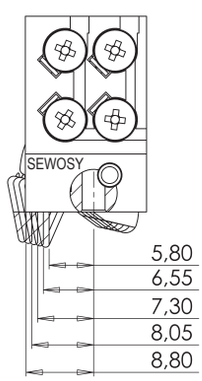

1 ROUREG™ - 1 ROUREG™ OPEM - 1 ROUREG™ CONTACT MINI RED SCREW TERMINAL

fail secure (power to open)

- Tri-voltage 12, 24, 48V AC/DC
- Diode protecting against self effect
- Permanent opening by mechanical OPEM lever (SEM1LR)
- Open or closed door position sensor (SEM1CR)
- Adjustable latch (3 mm) and reduced aperture offset

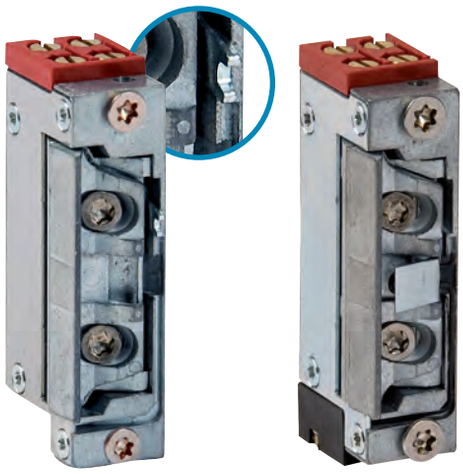

SEM1LR SEM1CR

CHARACTERISTICS

Dimensions H x W x D	SEM1R / SEM1LR	61,75 x 15,80 x 25,5 mm
	SEM1CR	64,60 x 15,80 x 25,5 mm

V AC/DC	12-24V AC/DC	ImA AC/DC	200-400 mA
V AC	24-48V AC	ImA AC	100-200 mA
V/A	48V AC/DC-1A	DaN	350*
°C	-10 +60 °C		

* Maximal theoretical holding forces, for an implementation meeting the optimum laying conditions

Caution: allowed voltages (refer to technical characteristics)

SEM1R	Electric strike 1 ROUREG mini red 12 - 48V	0,12 kg	
SEM1LR	Electric strike 1 ROUREG mini red OPEM 12 - 48V	0,12 kg	
SEM1CR	Electric strike 1 ROUREG mini red contact 12 - 48V	0,12 kg	Customs code 83014019

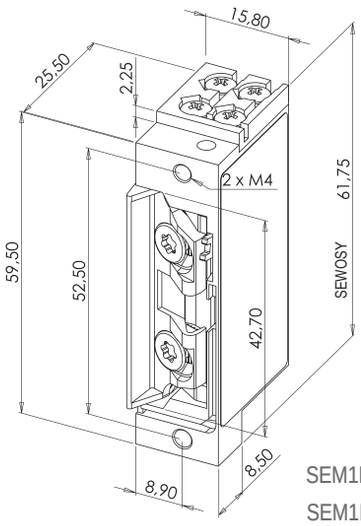

SEM1LR
SEM1LR

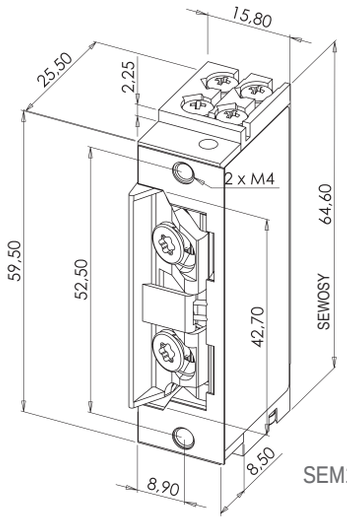

SEM1CR

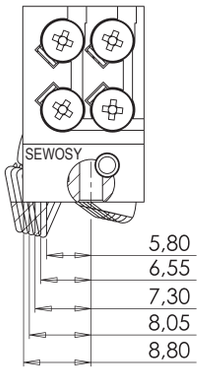

3 ROUREG™ - 3 ROUREG™ CONTACT MINI RED SCREW TERMINAL

fail safe (power to lock)

- Dual voltage 12/24V DC
- Diode protecting against self effect
- Open or closed door position sensor (SEM3CR)
- Adjustable latch (3 mm) and reduced aperture offset

SEM3R

SEM3CR

CHARACTERISTICS

Dimensions H x W x D	SEM3R SEM3CR	61,75 x 15,80 x 25,50 mm 64,60 x 15,80 x 25,5 mm	
V DC	12-24V DC	ImA DC	200-100 mA
V/A	48V AC/DC-1A	DaN	350*
°C	-10 +60 °C		

* Maximal theoretical holding forces, for an implementation meeting the optimum laying conditions

SEM3R	Electric strike 3 ROUREG mini red 12-24V DC	0,12 kg	
SEM3CR	Electric strike 3 ROUREG mini red contact 12-24V DC	0,12 kg	Customs code 83014019

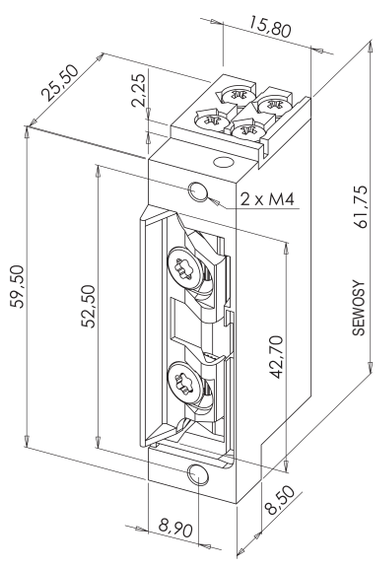

SEM3R

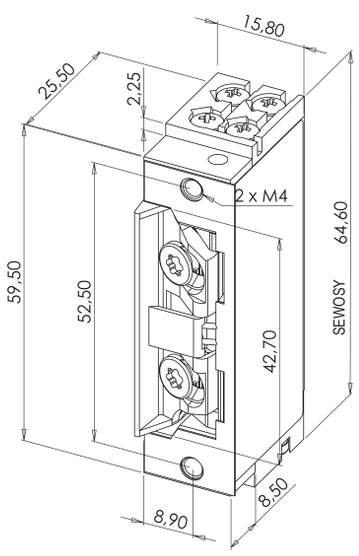

SEM3CR

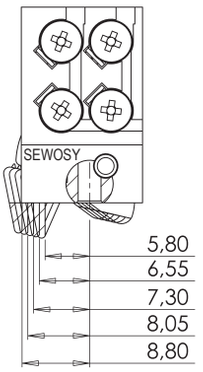

LONG OR SHORT REVERSIBLE FACE PLATES

for ROUREG™ MINI mortise electric strikes

- Suitable for most profiles
- Stainless steel
- 2 to 4 fixing points

SEF201 SEF203 SEF301

CHARACTERISTICS

Dimensions H x W x D	SEF201 SEF203 SEF301	250 x 25 x 3 mm 250 x 24 x 3 mm 110 x 25 x 3 mm

SEF201	Long reversible face plate 250 mm 2 holes stainless steel	0,1 kg	
SEF203	Long reversible face plate 250 mm 1 hole stainless steel	0,1 kg	
SEF301	Short reversible face plate 110 mm 1 hole stainless steel	0,1 kg	Customs code 83014019

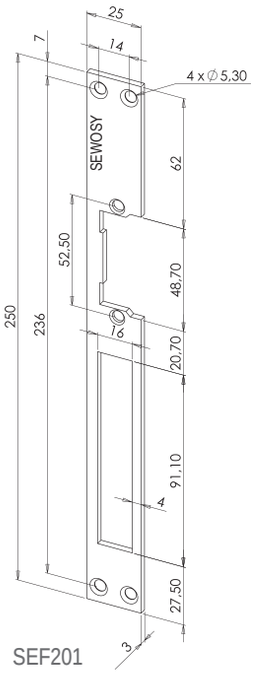

SEF201

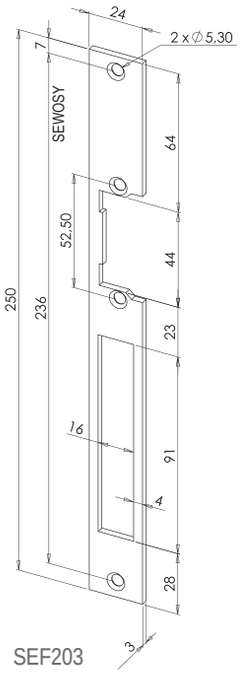

SEF203

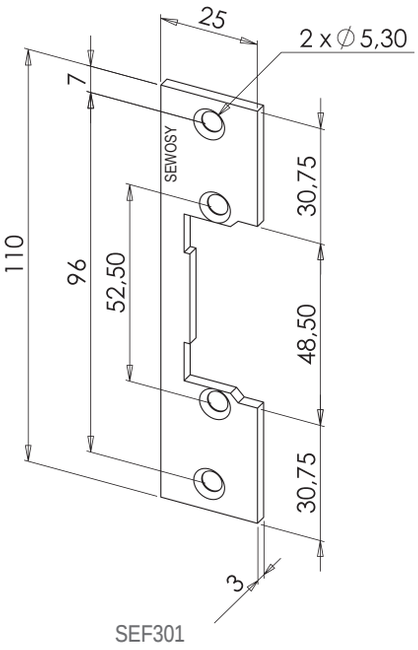

SEF301

SHORT ANGLE REVERSIBLE FACE PLATES

for ROUREG™ MINI mortise electric strikes

- Designed for wooden doors
- Staggered fixings on 2 faces
- Right or rounded angles
- Without cutout for deadbolt

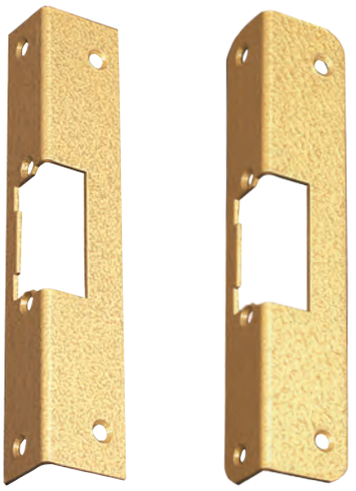

SEF10009 SEF10013

CHARACTERISTICS

Dimensions H x W x D	SEF10009 SEF10013	172 x 25 x 32 mm 172 x 25 x 32 mm

SEF10009	Short reversible angled face plate 172 mm	0,2 kg	
SEF10013	Short reversible angled face plate (with radius 10) 172 mm	0,2 kg	Customs code 83014019

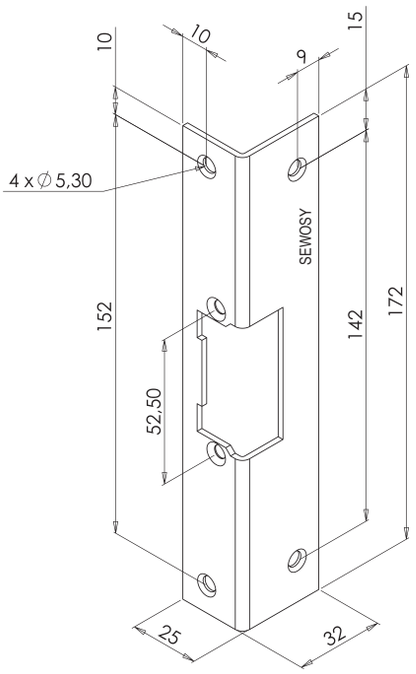

SEF10009

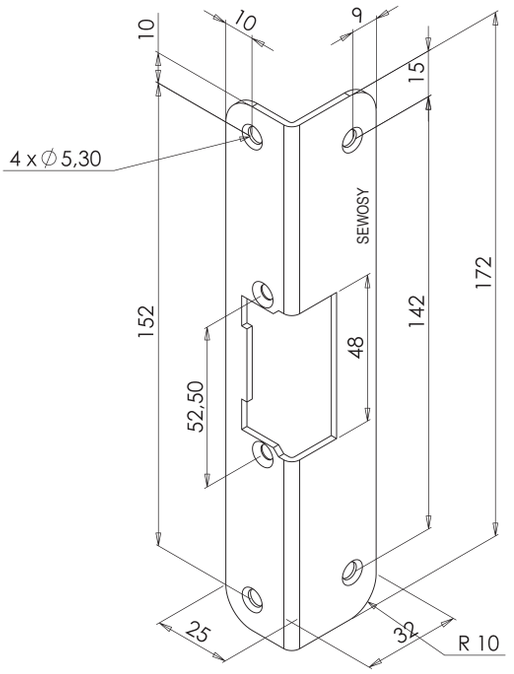

SEF10013

LONG ANGLE FACE PLATES DIN RIGHT - DIN LEFT

for ROUREG™ MINI mortise electric strikes

- Designed for wooden doors
- Fixings staggered on 2 faces
- Right or rounded angles
- With cutout for deadbolt

SEF10069

SEF10053

CHARACTERISTICS

Dimensions H x W x D	SEF10049	250 x 25 x 32 mm
	SEF10069	250 x 25 x 32 mm
	SEF10053	250 x 25 x 32 mm
	SEF10073	250 x 25 x 32 mm

SEF10049	Long angled face plate 250 mm DIN right	0,2 kg	
SEF10069	Long angled face plate 250 mm DIN left	0,2 kg	
SEF10053	Long angled face plate (with radius 10) 250 mm DIN right	0,2 kg	
SEF10073	Long angled face plate (with radius 10) 250 mm DIN left	0,2 kg	Customs code 83014019

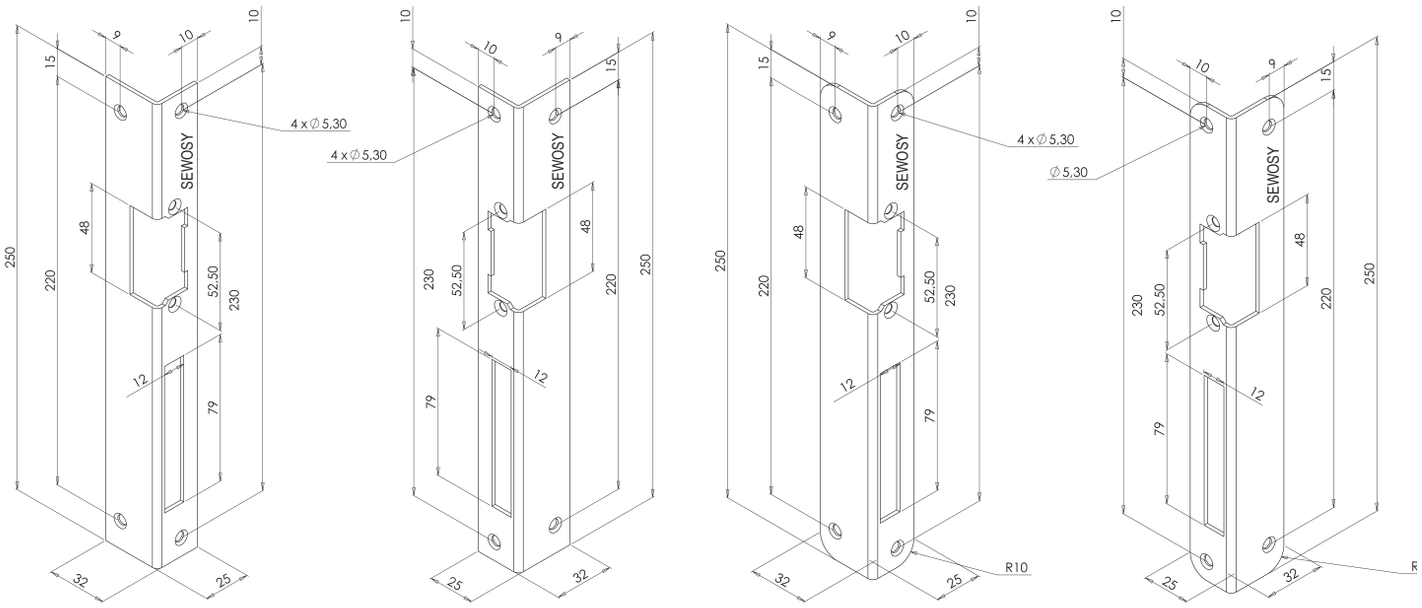

SEF10049 SEF10069 SEF10053 SEF10073

The electric strikes from FT series are particularly suitable for heavy and / or fire doors. Entirely made of steel, they have an outstandingly high melting point. The reduced aperture offset gives them great ease of installation, without necessary additional cutting to allow the rotation of the latch.

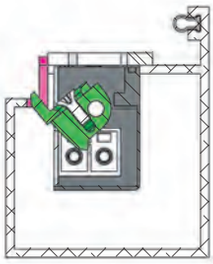

Cutting area of standard electric strike

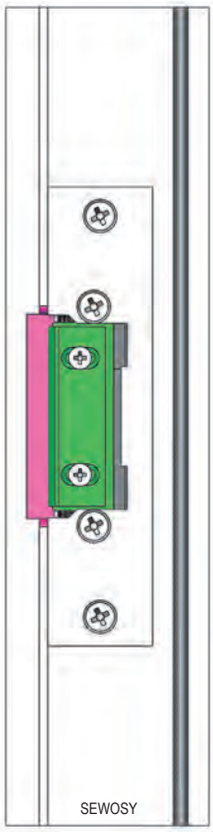

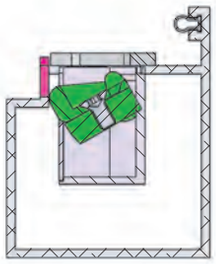

Cutting area of electric strike from ROUREG™ range

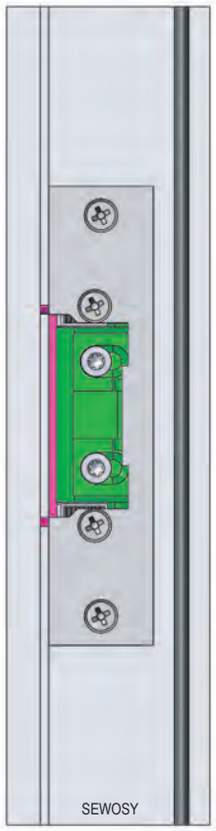

FT ELECTRIC STRIKES

1000 DaN *

CE

VdS N° Z 110503

MPA N° P-120002906

- **Symmetrical**
- **Adjustable latch (4 mm) and reduced aperture offset**
- Completely made of steel
- **Horizontal or vertical mounting**
- **Melting point > 1150° C**
- **For fire and smoke-tight doors**

* Maximal theoretical holding forces, for an implementation meeting the optimum laying conditions

MPA N° P-120002906

VdS N° Z 110503

FT ELECTRIC STRIKES

fail secure (power to open)

- Entirely made of steel
- Adjustable latch (4 mm) and reduced aperture offset
- Dual voltage
- Reversible and symmetrical

EFT---RACT2-

CHARACTERISTICS

Dimensions H x W x D	69 x 20,5 x 28 mm		
V AC/DC	6-12V AC/DC 12-24V AC/DC	ImA AC/DC	900-1100 mA 450-600 mA
V DC	6V DC 12V DC 24V DC	ImA DC	600 mA 300 mA 150 mA
DaN	1000*		

* Maximal theoretical holding forces, for an implementation meeting the optimum laying conditions

EFT---RACT2-	FT electric strike 6-12V AC/DC Fail secure	0,3 kg	
EFT---RACT9-	FT electric strike 12-24V AC/DC Fail secure	0,3 kg	Customs code 83014019

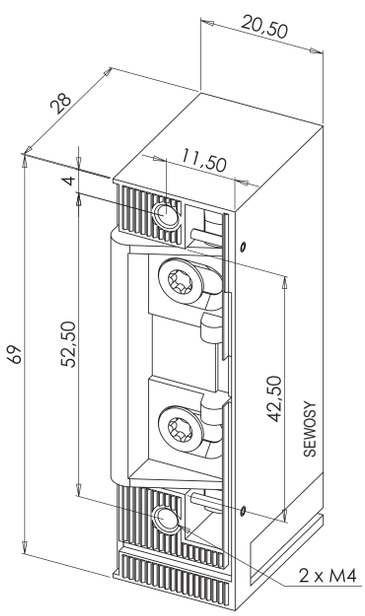

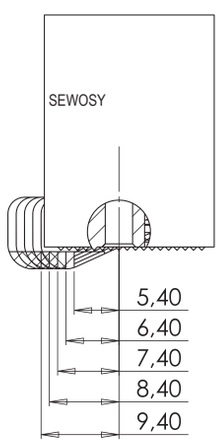

MPA N° P-120002906

VdS N° Z 110503

FT ELECTRIC STRIKES

fail secure (power to open) - with microswitch (door status sensor)

- Entirely made of steel
- Open or closed door position sensor
- Adjustable latch (4 mm) and reduced aperture offset
- Dual voltage
- Reversible and symmetrical

EFT-C-RACT2-

CHARACTERISTICS

Dimensions H x W x D	69 x 20,5 x 28 mm		
V AC/DC	6-12V AC/DC 12-24V AC/DC 24-48V AC/DC	ImA AC/DC	900-1100 mA 450-600 mA 220-300 mA
V DC	6V DC 12V DC 24V DC	ImA DC	600 mA 300 mA 150 mA
V/A	48V DC-5A	DaN	1000*

* Maximal theoretical holding forces, for an implementation meeting the optimum laying conditions

EFT-C-RACT2-	FT electric strike 6-12V AC/DC + contact Fail secure	0,3 kg
EFT-C-RACT9-	FT electric strike 12-24V AC/DC + contact Fail secure	0,3 kg
EFT-C-RACTA-	FT electric strike 24-48V AC/DC + contact Fail secure	0,3 kg

Customs code 83014019

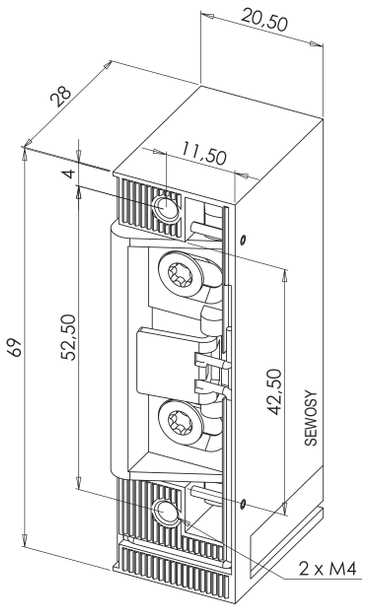

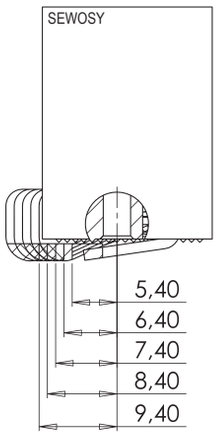

LONG OR SHORT REVERSIBLE FACE PLATES

- Suitable for most profiles
- Stainless steel
- 2 to 4 fixing points

SEF201 SEF203 SEF301

CHARACTERISTICS

Dimensions H x W x D	SEF201 SEF203 SEF301	250 x 25 x 3 mm 250 x 24 x 3 mm 110 x 25 x 3 mm

SEF201	Long reversible face plate 250 mm 2 holes stainless steel	0,1 kg	
SEF203	Long reversible face plate 250 mm 1 hole stainless steel	0,1 kg	
SEF301	Short reversible face plate 110 mm 1 hole stainless steel	0,1 kg	Customs code 83014019

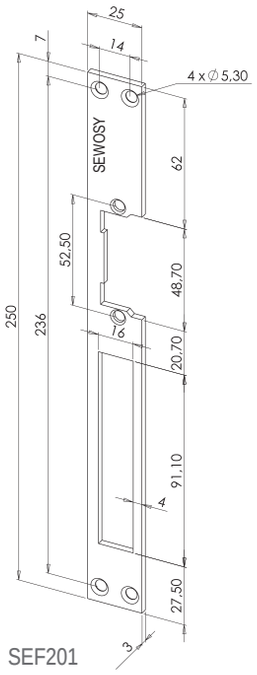

SEF201

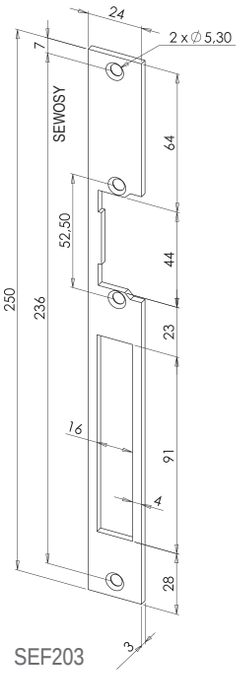

SEF203

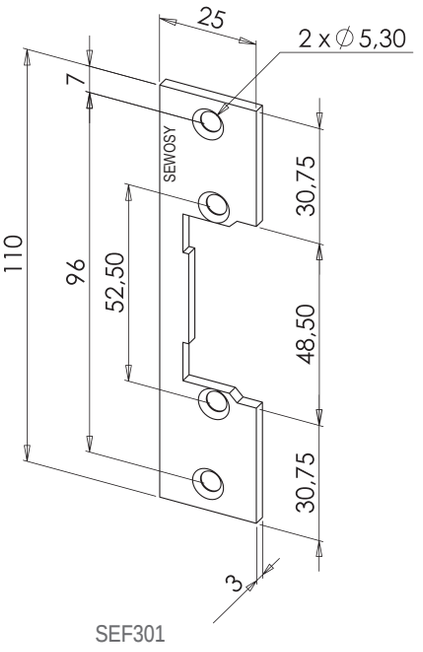

SEF301

SHORT ANGLE REVERSIBLE FACE PLATES

- Designed for wooden doors
- Staggered fixings on 2 faces
- Right or rounded angles
- Without cutout for deadbolt

SEF10009

SEF10013

CHARACTERISTICS

Dimensions H x W x D	SEF10009 SEF10013	172 x 25 x 32 mm 172 x 25 x 32 mm

SEF10009	Short reversible angled face plate 172 mm	0,2 kg	
SEF10013	Short reversible angled face plate (with radius 10) 172 mm	0,2 kg	Customs code 83014019

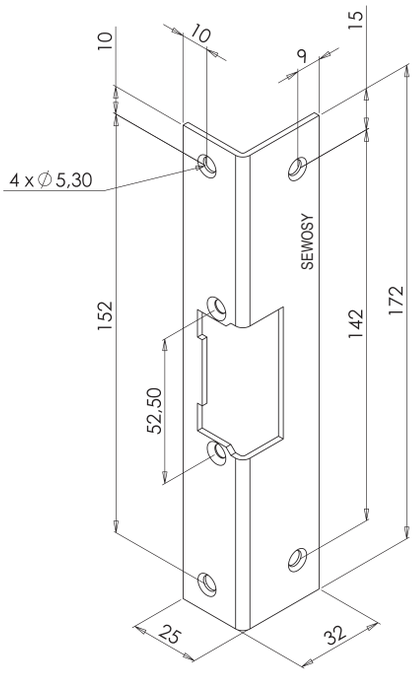

SEF10009

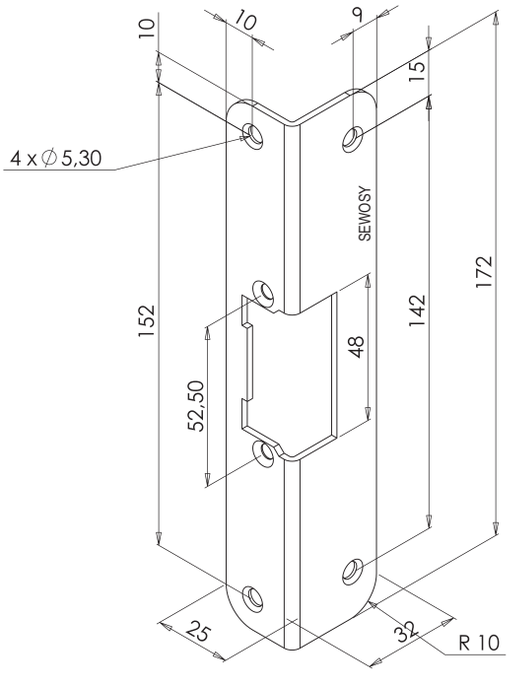

SEF10013

LONG ANGLE FACE PLATES DIN RIGHT - DIN LEFT

- Designed for wooden doors
- Staggered fixings on 2 faces
- Right or rounded angles
- With cutout for deadbolt

SEF10069

SEF10053

CHARACTERISTICS

Dimensions H x W x D	SEF10049	250 x 25 x 32 mm
	SEF10069	250 x 25 x 32 mm
	SEF10053	250 x 25 x 32 mm
	SEF10073	250 x 25 x 32 mm

SEF10049	Long angled face plate 250 mm DIN right	0,2 kg	
SEF10069	Long angled face plate 250 mm DIN left	0,2 kg	
SEF10053	Long angled face plate (with radius 10) 250 mm DIN right	0,2 kg	
SEF10073	Long angled face plate (with radius 10) 250 mm DIN left	0,2 kg	Customs code 83014019

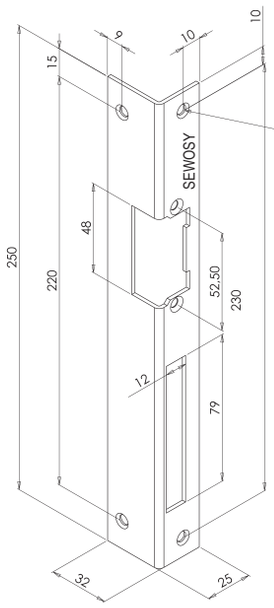

SEF10049

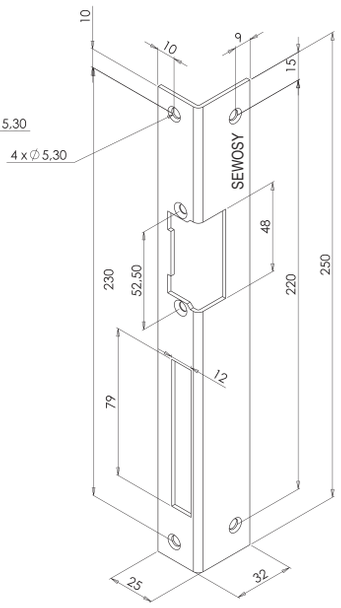

SEF10069

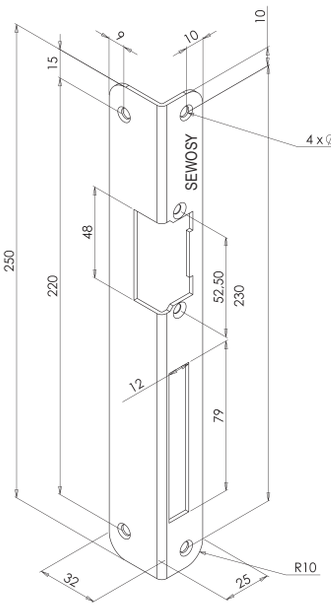

SEF10053

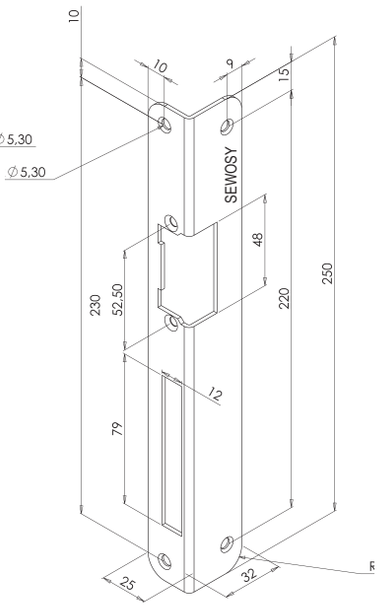

SEF10073

FLUSH-MOUNT COUNTERPART

for ROUREG™ mortise electric strikes

- Reduced dimensions
- Fitted with latch bolt

CPG-E

CHARACTERISTICS

Dimensions H x W x D	55,3 x 20,3 x 30,3 mm

CPG-E	Mortise latch bolt lock for ROUREG electric strikes	0,1 kg	Customs code 83014019

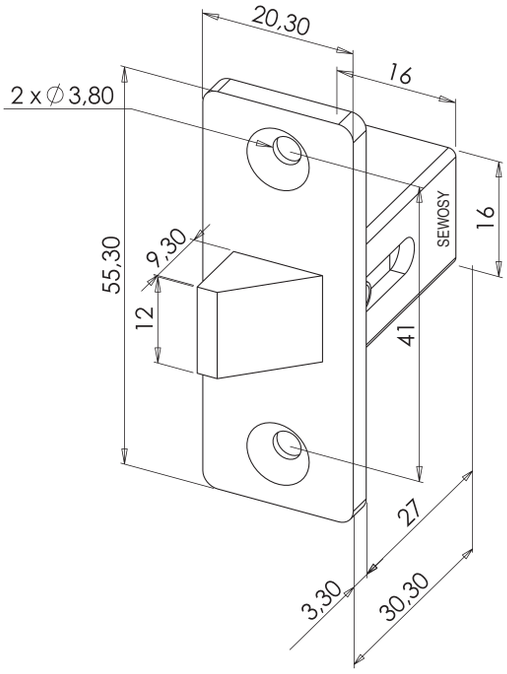

The electric strike GDES400 is suitable for glass openings having an aluminum, metal or PVC frame. It works as well on single doors as on double action doors for which the leaf has a thickness between 8 and 12 mm.

GDES400 ELECTRIC STRIKE FOR GLASS DOORS

400 DaN *

* Maximal theoretical holding forces, for an implementation meeting the optimum laying conditions

- Fail secure or fail safe
- **Latch designed to accommodate directly the glass door**
- To be mounted into wooden, aluminium, steel, PVC frames, ... in **association with glass door leaves**
- For standard or double action doors
- **Possible unlocking by cylinder**

GDES400 ELECTRIC STRIKE FOR GLASS DOORS

fail secure (power to open) or fail safe (power to lock)

- Dual voltage 12/24V DC
- Unlocking per cylinder (25 mm axis)
- Status contact locked / unlocked
- For single or double action door
- Shims to accomodate a 8 to 12 mm door leaf

GDES400

CHARACTERISTICS

Dimensions H x W x D	245 x 25 x 41,5 mm		
V DC	12-24V DC	ImA DC	300-150 mA
IP	42	DaN	400*
V/A	125V AC-3 A		

* Maximal theoretical holding forces, for an implementation meeting the optimum laying conditions

GDES400	Electric strike for glass door 8-12 mm 12-24V DC + contact fail secure or fail safe	1,3 kg	Customs code 83014019

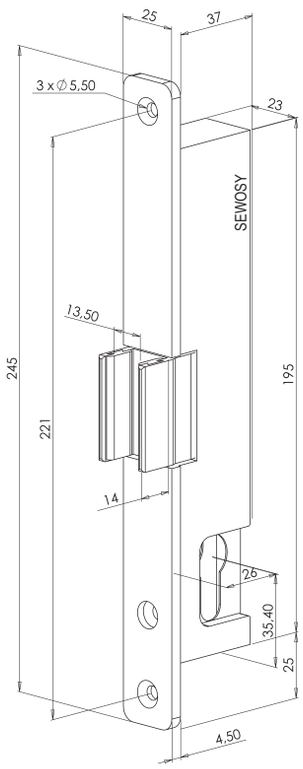

GDES400 ELECTRIC STRIKE FOR GLASS DOORS

fail secure (power to open) and fail safe (power to lock)

MOUNTING DIAGRAM

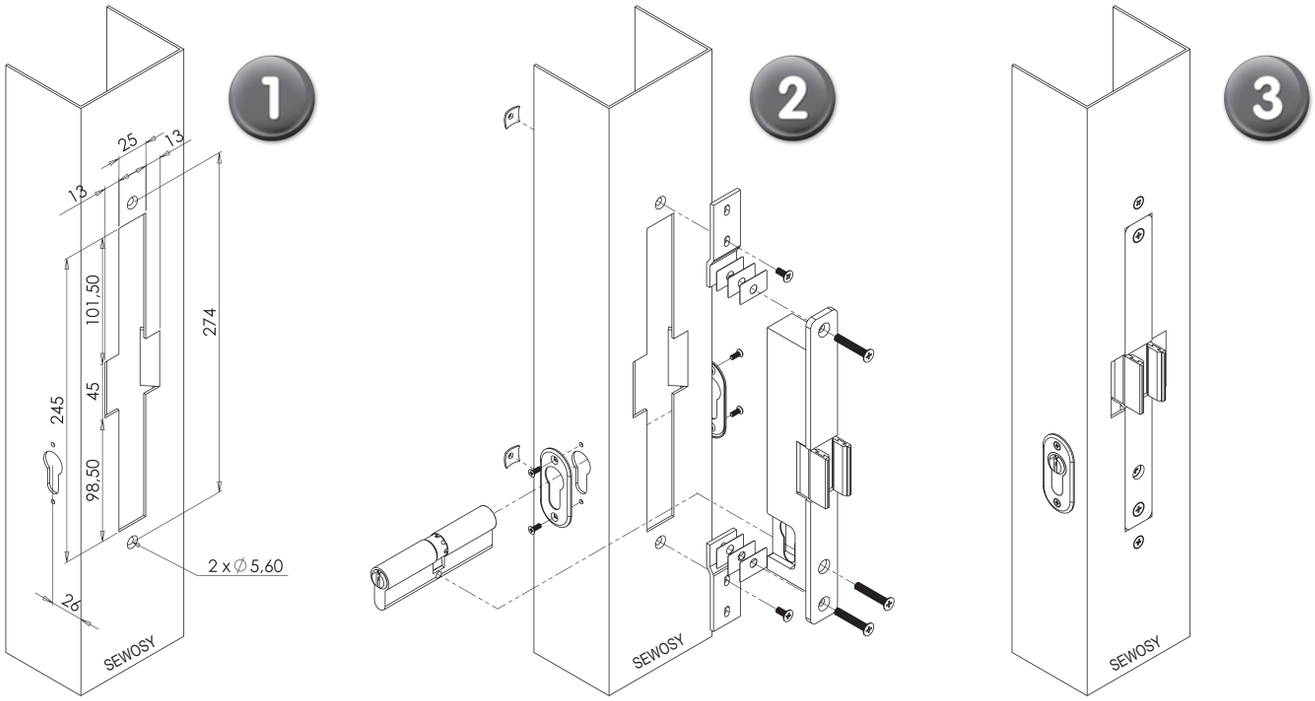

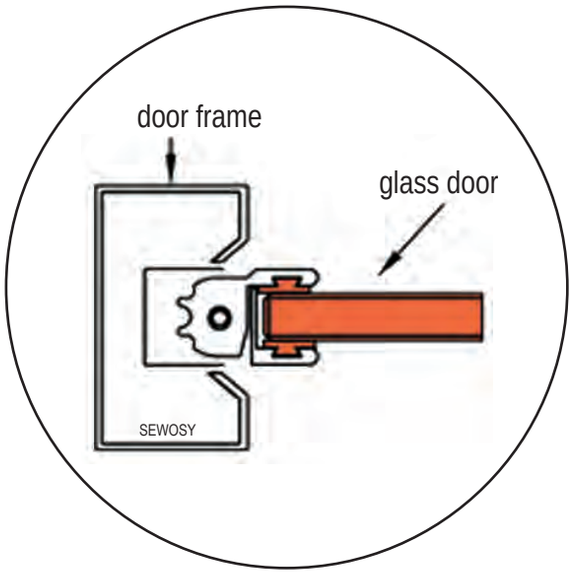

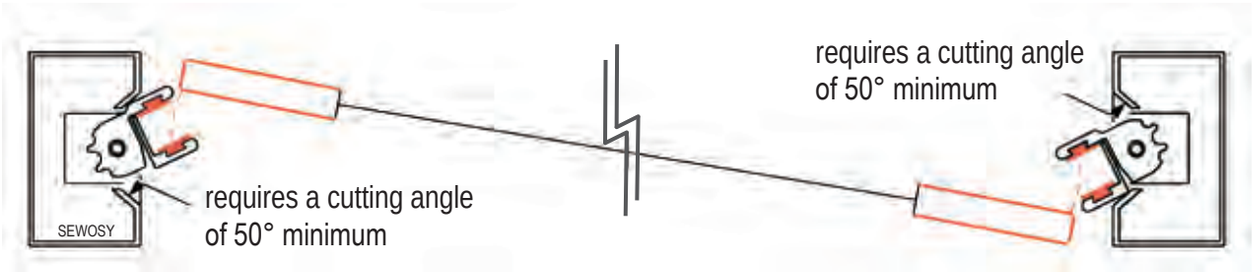

The electric strikes from PANIC series are compatible with a majority of panic bars on the market, excluding the models with security latch. Especially suitable for using an emergency exit as main or secondary entrance door in addition to an access control, these strikes were manufactured in order to facilitate their installation (notably the PM version delivered with 4 series spacers).

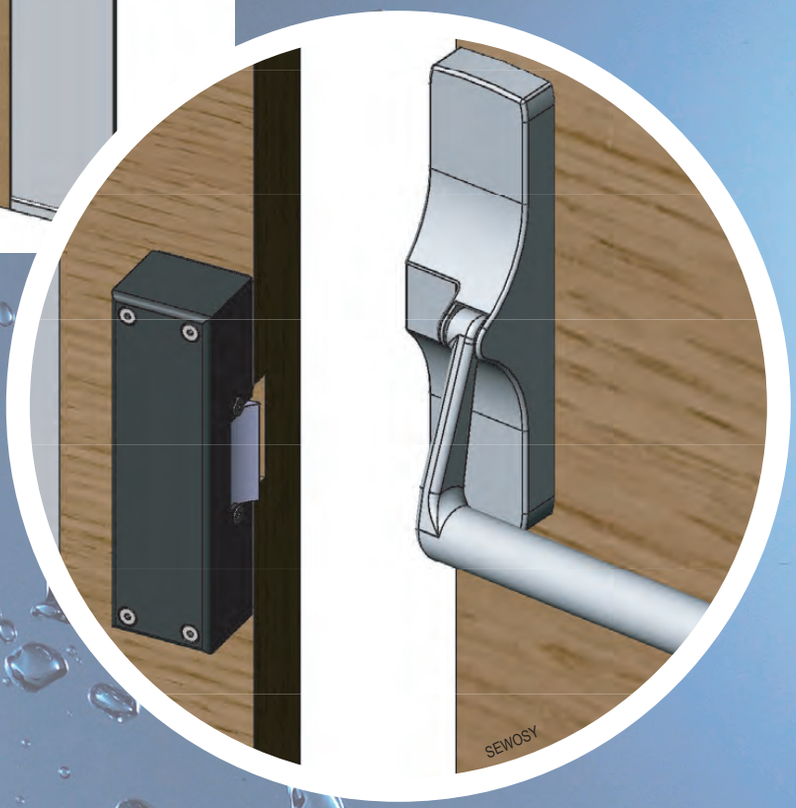

ELECTRIC STRIKES FOR PANIC BARS PM AND GM MODELS

700 DaN *

CE

* Maximal theoretical holding forces, for an implementation meeting the optimum laying conditions

- Suitable for all types of PANIC bars except models with security latch
- Two box sizes available:
  - PM : 28,5 mm housing depth
  - GM : 38 mm housing depth
- **More than 300 000 opening cycles guaranteed**
- **6 socket CSK Cap screws**
- The PM model comes with 4 series spacers **(thickness: 1 - 2 and 3 mm)**

PANIC PM ELECTRIC STRIKE - small housing

fail secure (power to open)

- Allows using a door fitted with panic bar as a passing door
- Easy adjustment thanks to 4 serie spacers (thickness 1 - 2 - 2 x 3 mm)
- Over 300 000 opening cycles guaranteed

SE1APPM

CHARACTERISTICS

Dimensions H x W x D	161 x 46 x 28,5 mm		
V AC/DC	12V AC/DC	ImA AC/DC	500 mA
V DC	12V DC 24V DC	ImA DC	200 mA 150 mA
°C	-10 +60 °C	DaN	700*

* Maximal theoretical holding forces, for an implementation meeting the optimum laying conditions

SE1APPM	Electric strike 1 PANIC 12V AC/DC box : 28.5 mm fail secure	0,9 kg	
SE1APPM12	Electric strike 1 PANIC 12V DC box : 28.5 mm fail secure	0,9 kg	
SE1APPM24	Electric strike 1 PANIC 24V DC box : 28.5 mm fail secure	0,9 kg	Customs code 83014019

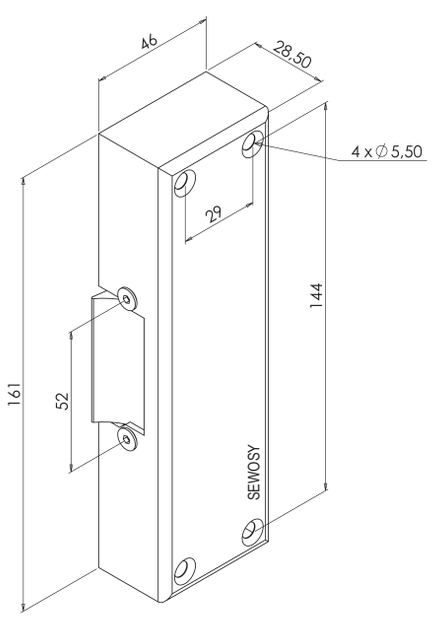

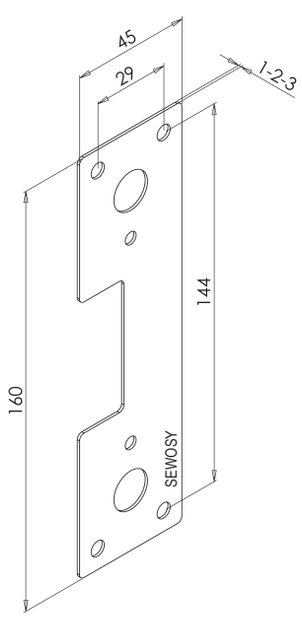

PANIC PM CONTACT ELECTRIC STRIKE - small housing

fail secure (power to open)

- Allows using a door fitted with panic bar as a passing door
- Open or closed door position sensor
- Easy adjustment thanks to 4 serie spacers (thickness 1 - 2 - 2 x 3 mm)
- Over 300 000 opening cycles guaranteed

SE1APCPM

CHARACTERISTICS

Dimensions H x W x D	161 x 46 x 28,5 mm		
V AC/DC	12V AC/DC	ImA AC/DC	500 mA
V DC	12V DC 24V DC	ImA DC	200 mA 150 mA
V/A	125V AC-1 A 30V DC-0,5 A	DaN	700*
°C	-10 +60 °C		

* Maximal theoretical holding forces, for an implementation meeting the optimum laying conditions

SE1APCPM	Electric strike 1 PANIC 12V AC/DC + contact box : 28.5 mm fail secure	0,9 kg	
SE1APCPM12	Electric strike 1 PANIC 12V DC + contact box : 28.5 mm fail secure	0,9 kg	
SE1APCPM24	Electric strike 1 PANIC 24V DC + contact box : 28.5 mm fail secure	0,9 kg	Customs code 83014019

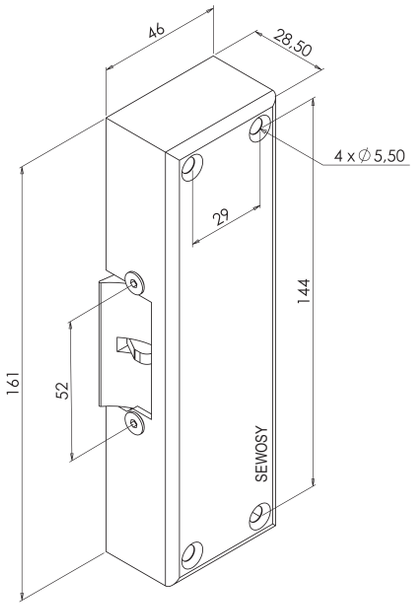

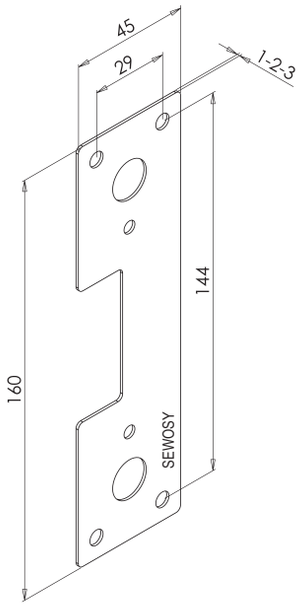

PANIC PM ELECTRIC STRIKE - small housing

fail safe (power to lock)

- Allows using a door fitted with panic bar as a passing door
- Easy adjustment thanks to 4 serie spacers (thickness 1 - 2 - 2 x 3 mm)
- Over 300 000 opening cycles guaranteed

SE3APPM12

CHARACTERISTICS

Dimensions H x W x D	161 x 46 x 28,5 mm

V DC	12V DC 24V DC	ImA DC	200 mA 150 mA
°C	-10 +60 °C	DaN	700*

* Maximal theoretical holding forces, for an implementation meeting the optimum laying conditions

SE3APPM12	Electric strike 3 PANIC 12V DC box : 28.5 mm fail safe	1 kg	
SE3APPM24	Electric strike 3 PANIC 24V DC box : 28.5 mm fail safe	1 kg	Customs code 83014019

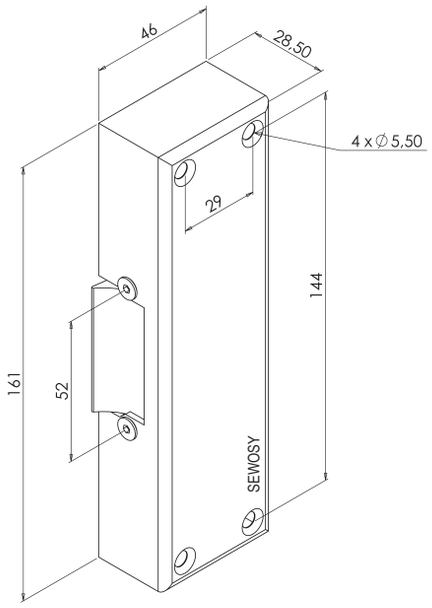

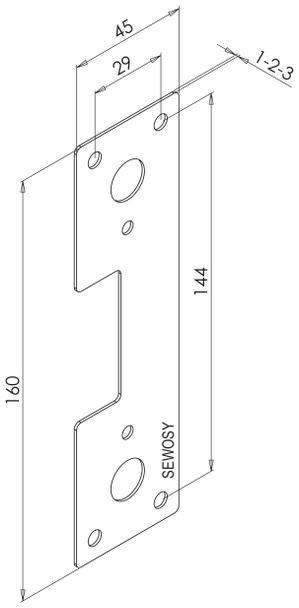

PANIC PM CONTACT ELECTRIC STRIKE - small housing

fail safe (power to lock)

- Allows using a door fitted with panic bar as a passing door
- Open or closed door position sensor
- Easy adjustment thanks to 4 serie spacers (thickness 1 - 2 - 2 x 3 mm)
- Over 300 000 opening cycles guaranteed

SE3APCPM12

CHARACTERISTICS

Dimensions H x W x D	161 x 46 x 28,5 mm		
V DC	12V DC 24V DC	ImA DC	200 mA 150 mA
V/A	125V AC-1 A 30V DC-0,5 A	DaN	700*
°C	-10 +60 °C		

* Maximal theoretical holding forces, for an implementation meeting the optimum laying conditions

SE3APCPM12	Electric strike 3 PANIC 12V DC + contact box : 28.5 mm fail safe	1 kg	
SE3APCPM24	Electric strike 3 PANIC 24V DC + contact box : 28.5 mm fail safe	1 kg	Customs code 83014019

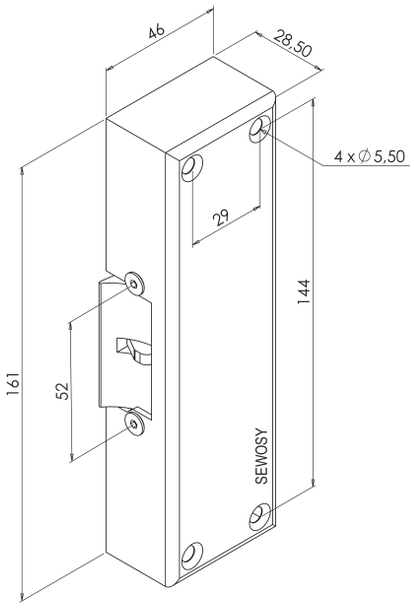

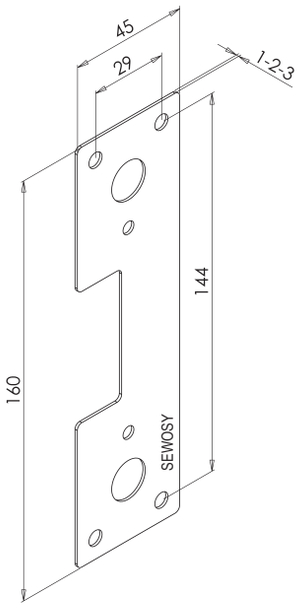

PANIC GM ELECTRIC STRIKE - large housing

fail secure (power to open)

- Allows using a door fitted with panic bar as a passing door
- Over 300 000 opening cycles guaranteed

SE1APGM

CHARACTERISTICS

Dimensions H x W x D	161 x 46 x 38 mm

V AC/DC	12V AC/DC	ImA AC/DC	500 mA
V DC	12V DC 24V DC	ImA DC	200 mA 150 mA
°C	-10 +60 °C	DaN	700*

* Maximal theoretical holding forces, for an implementation meeting the optimum laying conditions

SE1APGM	Electric strike 1 PANIC 12V AC/DC box : 38 mm fail secure	0,6 kg	
SE1APGM12	Electric strike 1 PANIC 12V DC box : 38 mm fail secure	0,6 kg	
SE1APGM24	Electric strike 1 PANIC 24V DC box : 38 mm fail secure	0,6 kg	Customs code 83014019

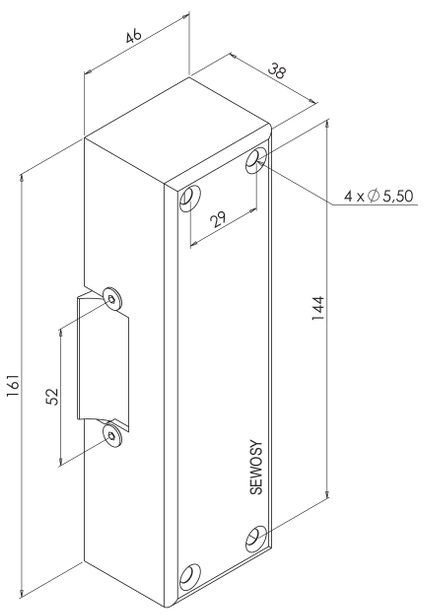

PANIC GM CONTACT ELECTRIC STRIKE - large housing

fail secure (power to open)

- Allows using a door fitted with panic bar as a passing door
- Open or closed door position sensor
- Over 300 000 opening cycles guaranteed

SE1APCGM

CHARACTERISTICS

Dimensions H x W x D	161 x 46 x 38 mm		
V AC/DC	12V AC/DC	ImA AC/DC	500 mA
V DC	12V DC 24V DC	ImA DC	200 mA 150 mA
V/A	125V AC-1 A 30V DC-0,5 A	DaN	700*
°C	-10 +60 °C		

* Maximal theoretical holding forces, for an implementation meeting the optimum laying conditions

SE1APCGM	Electric strike 1 PANIC 12V AC/DC + contact box : 38 mm fail secure	0,6 kg	
SE1APCGM12	Electric strike 1 PANIC 12V DC + contact box : 38 mm fail secure	0,6 kg	
SE1APCGM24	Electric strike 1 PANIC 24V DC + contact box : 38 mm fail secure	0,6 kg	Customs code 83014019

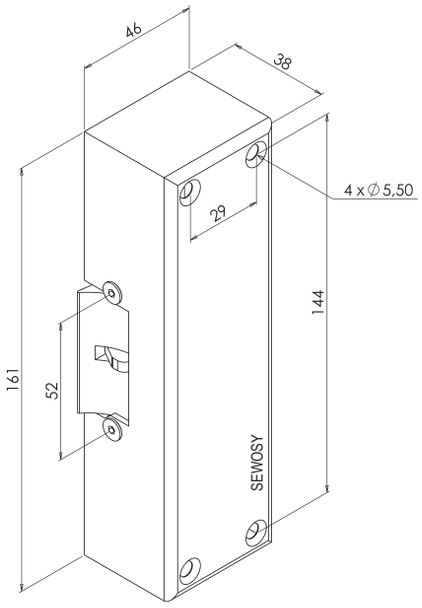

PANIC GM ELECTRIC STRIKE - large housing

fail safe (power to lock)

- Allows using a door fitted with panic bar as a passing door
- Over 300 000 opening cycles guaranteed

SE3APGM12

CHARACTERISTICS

Dimensions H x W x D	161 x 46 x 38 mm		
V DC	12V DC 24V DC	ImA DC	200 mA 150 mA
°C	-10 +60 °C	DaN	700*

* Maximal theoretical holding forces, for an implementation meeting the optimum laying conditions

SE3APGM12	Electric strike 3 PANIC 12V DC box : 38 mm fail safe	0,6 kg	
SE3APGM24	Electric strike 3 PANIC 24V DC box : 38 mm fail safe	0,6 kg	Customs code 83014019

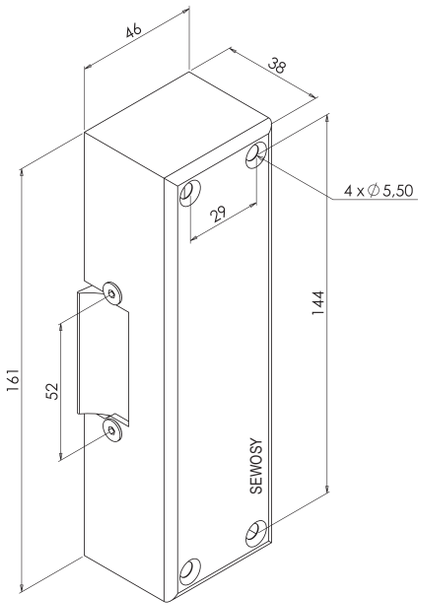

PANIC GM CONTACT ELECTRIC STRIKE - large housing

fail safe (power to lock)

- Allows using a door fitted with panic bar as a passing door
- Open or closed door position sensor
- Over 300 000 opening cycles guaranteed

SE3APCGM12

CHARACTERISTICS

Dimensions H x W x D	161 x 46 x 38 mm		
V DC	12V DC 24V DC	ImA DC	200 mA 150 mA
V/A	125V AC-1 A 30V DC-0,5 A	DaN	700*
°C	-10 +60 °C		

* Maximal theoretical holding forces, for an implementation meeting the optimum laying conditions

SE3APCGM12	Electric strike 3 PANIC 12V DC + contact box : 38 mm fail safe	0,6 kg	
SE3APCGM24	Electric strike 3 PANIC 24V DC + contact box : 38 mm fail safe	0,6 kg	Customs code 83014019

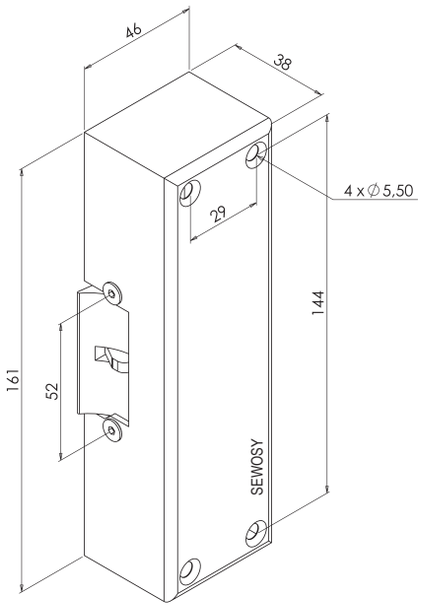

The electric strikes from the SEA series are compatible with a majority of the current surface mechanical locks, either vertical or horizontal.Their manufacture ensures them a high reliability.

Expert's corner:

*How to determine the **opening direction of a door**:*

*It is essential to stand on the door side where the **hinges are visible**.*

*- If they are on the **right**, the door is a DIN **right***

*- If they are on the **left**, the door is a DIN **left***

DIN RIGHT opening

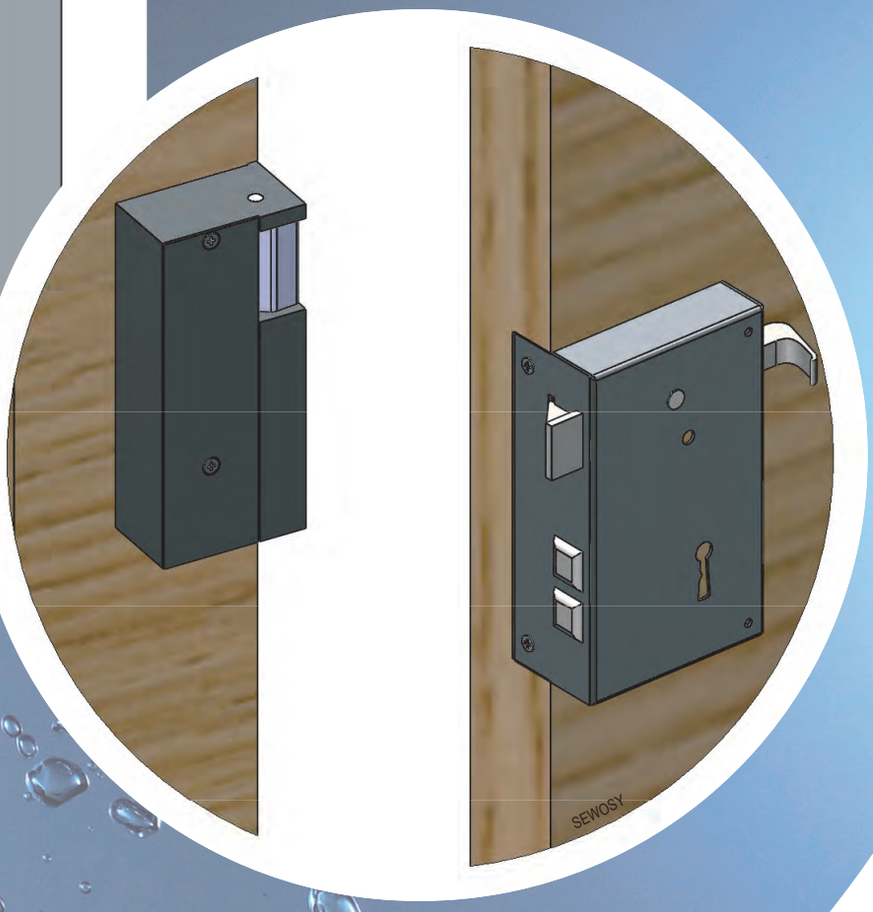

SURFACE ELECTRIC STRIKES

400 DaN *

* Maximal theoretical holding forces, for an implementation meeting the optimum laying conditions

MODEL 90
for horizontal locks

CE

MODEL 120
for vertical locks

SURFACE ELECTRIC STRIKES 90 - DIN LEFT

190 : fail secure (power to open)
290 : fail secure with mechanical memory via internal contact
390 : fail safe (power to lock)

- Model for horizontal surface-mounted locks
- Opening by pulling right-hand (DIN Left)

SEA190_DL

CHARACTERISTICS

Dimensions H x W x D	90 x 50 x 52,5 mm		
V AC/DC	12V AC/DC	ImA AC/DC	850 mA
V DC	12V DC	ImA DC	270 mA
°C	-10 +60 °C	DaN	400*

* Maximal theoretical holding forces, for an implementation meeting the optimum laying conditions

SEA190_DL	Surface electric strike 190 12V AC/DC DIN left fail secure	0,28 kg	
SEA290_DL	Surface electric strike 290 12V AC/DC DIN left fail secure with memory	0,28 kg	
SEA390_DL	Surface electric strike 390 12V DC DIN left fail safe	0,28 kg	Customs code 83014019

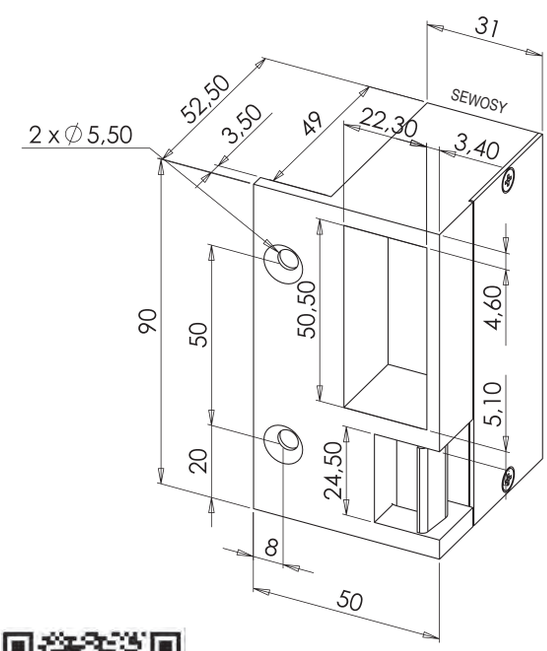

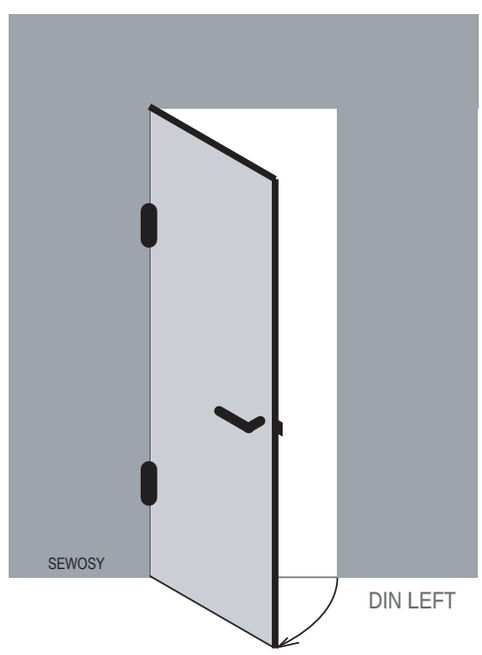

SURFACE ELECTRIC STRIKES 90 - DIN RIGHT

190 : fail secure (power to open)
290 : fail secure with mechanical memory via internal contact
390 : fail safe (power to lock)

- Model for horizontal surface-mounted locks
- Opening by pulling left-hand (DIN Right)

SEA190_DR

CHARACTERISTICS

Dimensions H x W x D	90 x 50 x 52,5 mm		
V AC/DC	12V AC/DC	ImA AC/DC	850 mA
V DC	12V DC	ImA DC	270 mA
°C	-10 +60 °C	DaN	400*

* Maximal theoretical holding forces, for an implementation meeting the optimum laying conditions

SEA190_DR	Surface electric strike 190 12V AC/DC DIN right fail secure	0,28 kg	
SEA290_DR	Surface electric strike 290 12V AC/DC DIN right fail secure with memory	0,28 kg	
SEA390_DR	Surface electric strike 390 12V DC DIN right fail safe	0,28 kg	Customs code 83014019

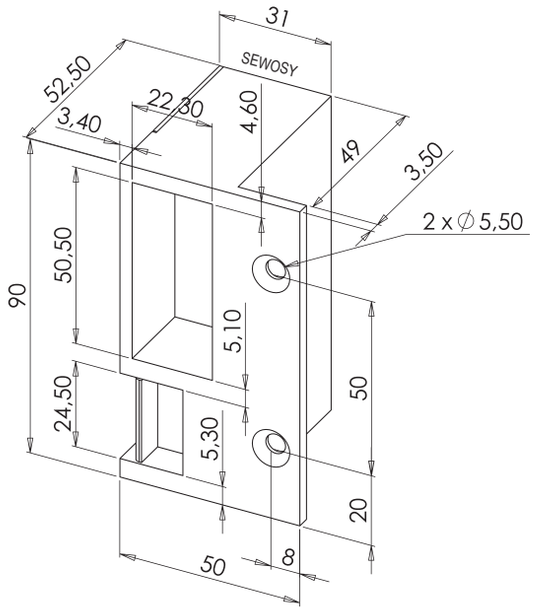

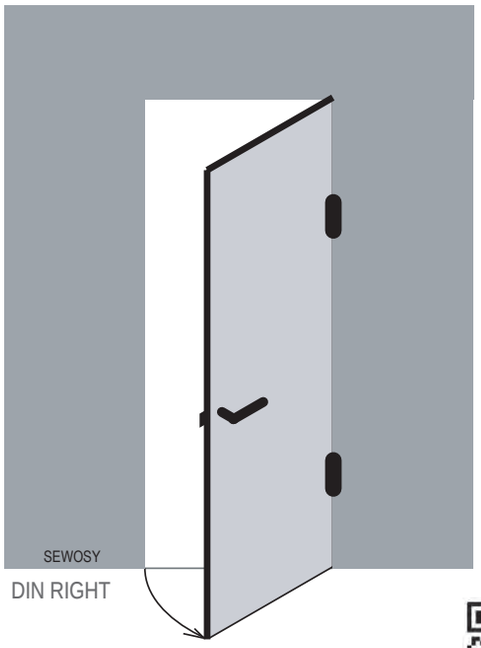

DIN RIGHT

SURFACE ELECTRIC STRIKES 120 - DIN LEFT

1120 : fail secure (power to open)
2120 : fail secure with mechanical memory via internal contact
3120 : fail safe (power to lock)

- Model for vertical surface-mounted locks
- Opening by pulling right-hand (DIN Left)

SEA1120_DL

CHARACTERISTICS

Dimensions H x W x D	120 x 50 x 52,5 mm		
V AC/DC	12V AC/DC	ImA AC/DC	850 mA
V DC	12V DC	ImA DC	270 mA
°C	-10 +60 °C	DaN	400*

* Maximal theoretical holding forces, for an implementation meeting the optimum laying conditions

SEA1120_DL	Surface electric strike 1120 12V AC/DC DIN left fail secure	0,35 kg	
SEA2120_DL	Surface electric strike 2120 12V AC/DC DIN left fail secure with memory	0,35 kg	
SEA3120_DL	Surface electric strike 3120 12V DC DIN left fail safe	0,35 kg	Customs code 83014019

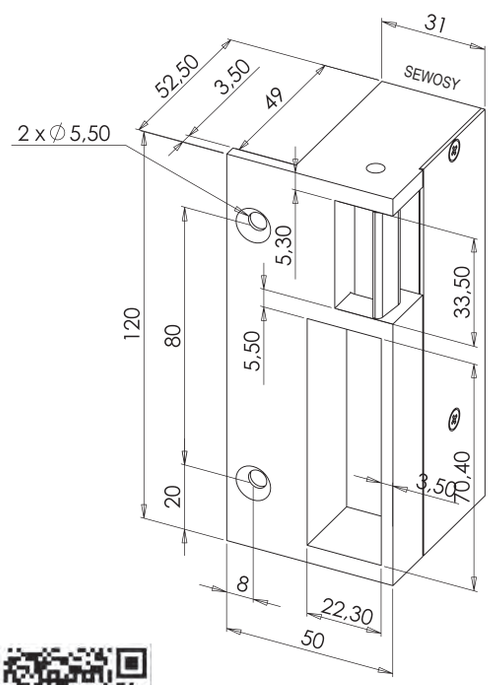

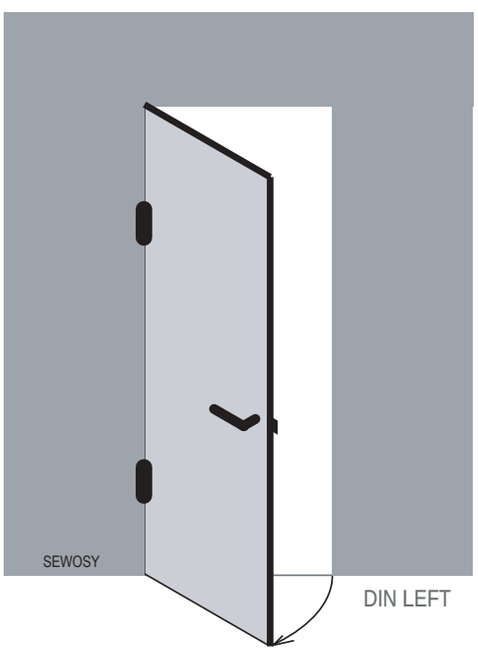

SURFACE ELECTRIC STRIKES 120 - DIN RIGHT

1120 : fail secure (power to open)
2120 : fail secure with mechanical memory via internal contact
3120 : fail safe (power to lock)

- Model for vertical surface-mounted locks
- Opening by pulling left-hand (DIN Right)

SEA1120_DR

CHARACTERISTICS

Dimensions H x W x D	120 x 50 x 52,5 mm		
V AC/DC	12V AC/DC	ImA AC/DC	850 mA
V DC	12V DC	ImA DC	270 mA
°C	-10 +60 °C	DaN	400*

* Maximal theoretical holding forces, for an implementation meeting the optimum laying conditions

SEA1120_DR	Surface electric strike 1120 12V AC/DC DIN right fail secure	0,35 kg	
SEA2120_DR	Surface electric strike 2120 12V AC/DC DIN right fail secure with memory	0,35 kg	
SEA3120_DR	Surface electric strike 3120 12V DC DIN right fail safe	0,35 kg	Customs code 83014019

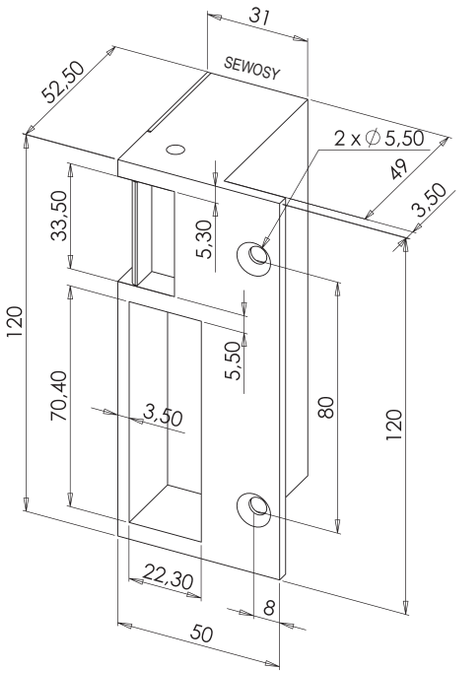

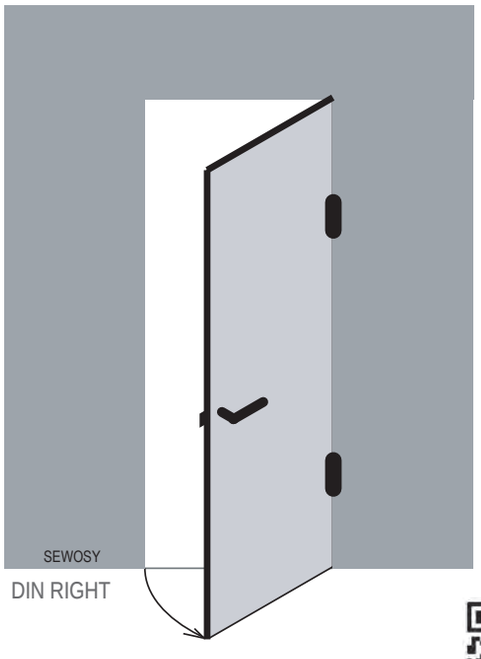

DIN RIGHT

The electric strikes of the SE2MI series are flush-mountable in most existing profiles. These electric strikes have an internal mechanical memory different from a classical mechanical memory as they don't take into account the door status and so can be actuated, no matter if the door is open or closed.

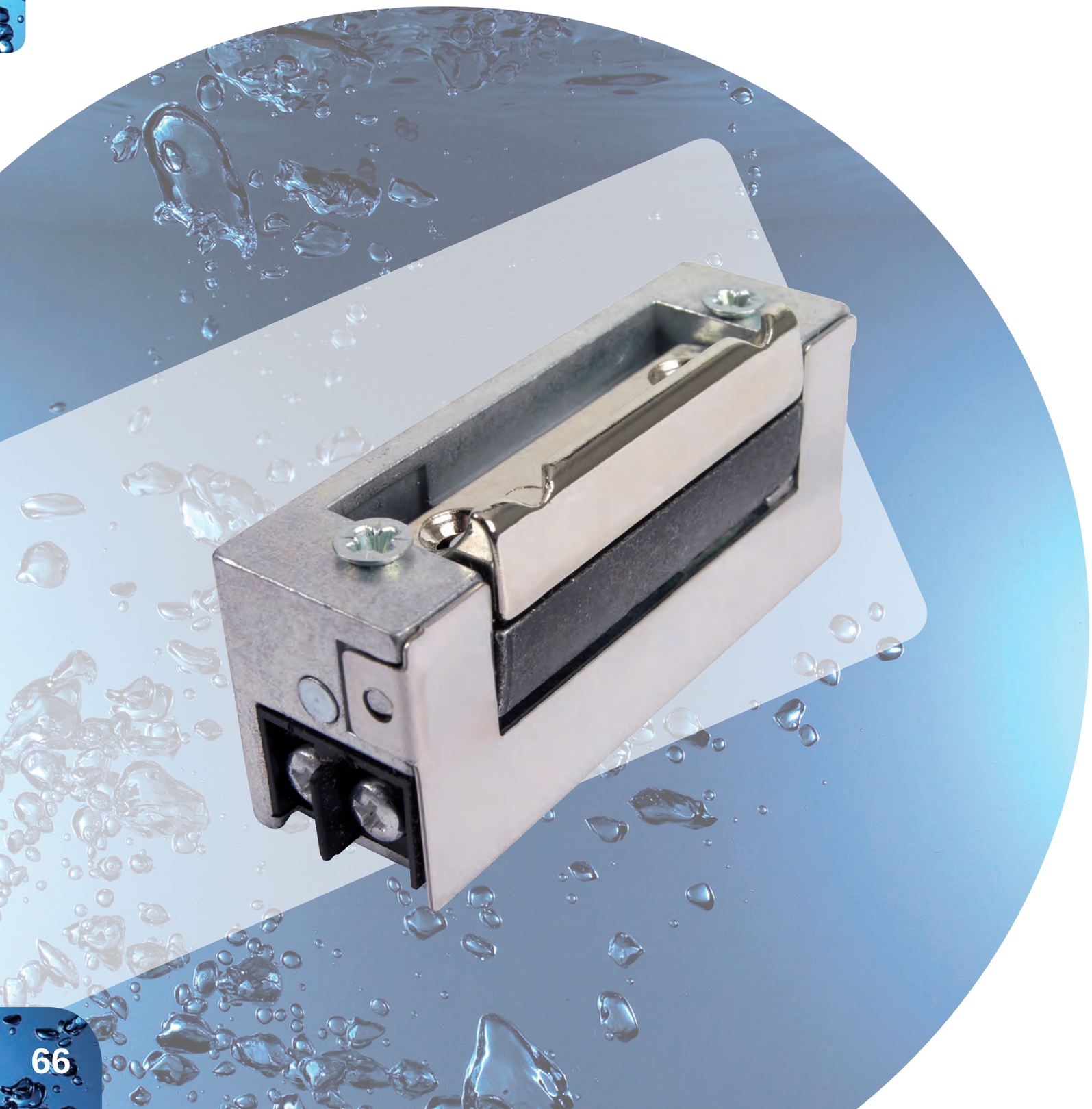

ELECTRIC STRIKES WITH INTERNAL MECHANICAL MEMORY

300 DaN *

CE

* Maximal theoretical holding forces, for an implementation meeting the optimum laying conditions

- **Symmetrical**
- **Adjustable latch (3 mm)**

SPECIFIC MORTISE ELECTRIC STRIKES

model 2: fail secure (power to open) with internal mechanical memory

- Adjustable latch (3 mm)
- Permanent opening by mechanical deactivation (OPEM lever)
- Activation with open or closed door

SE2MI

CHARACTERISTICS

Dimensions H x W x D	67 x 20,5 x 28,5 mm		
V AC/DC	12V AC/DC	ImA AC/DC	1000 mA
DaN	300*		

* Maximal theoretical holding forces, for an implementation meeting the optimum laying conditions

SE2MI	Electric strike fail secure 12V AC/DC with internal memory	0,2 kg	
SE2MIO	Electric strike fail secure 12v ac/dc with internal memory + opem	0,2 kg	Customs code 83014019

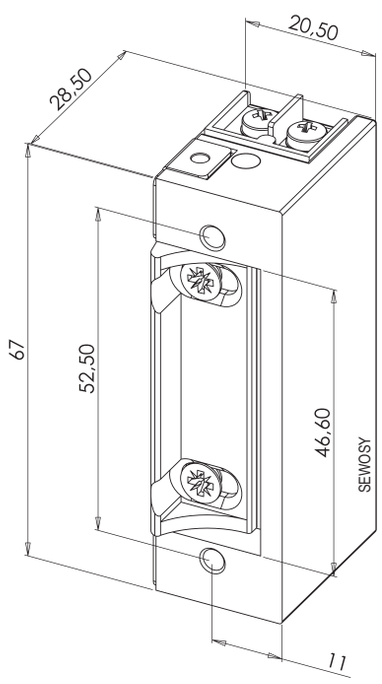

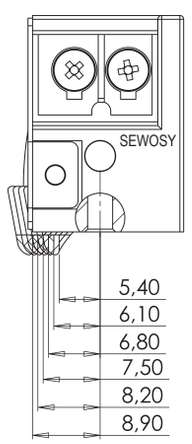

LONG OR SHORT REVERSIBLE FACE PLATES

for mortise electric strikes with internal mechanical memory

- Suitable for most profiles
- Stainless steel
- 2 to 4 fixing points

SEF201 SEF203 SEF301

CHARACTERISTICS

Dimensions H x W x D	SEF201 SEF203 SEF301	250 x 25 x 3 mm 250 x 24 x 3 mm 110 x 25 x 3 mm

SEF201	Long reversible face plate 250 mm 2 holes stainless steel	0,1 kg	
SEF203	Long reversible face plate 250 mm 1 hole stainless steel	0,1 kg	
SEF301	Short reversible face plate 110 mm 1 hole stainless steel	0,1 kg	Customs code 83014019

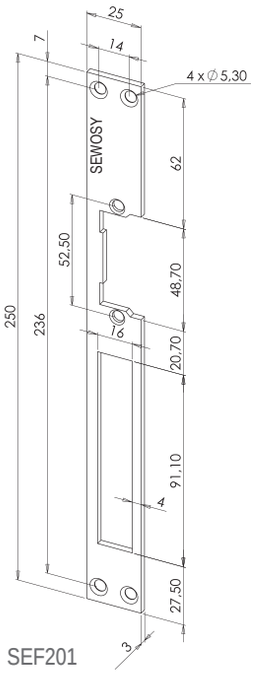

SEF201

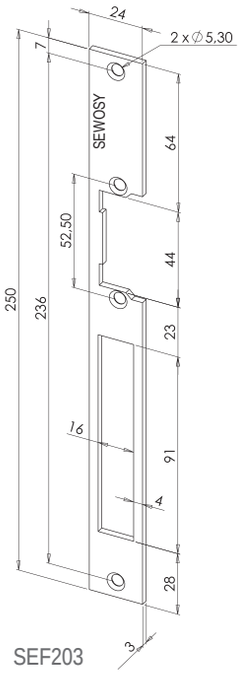

SEF203

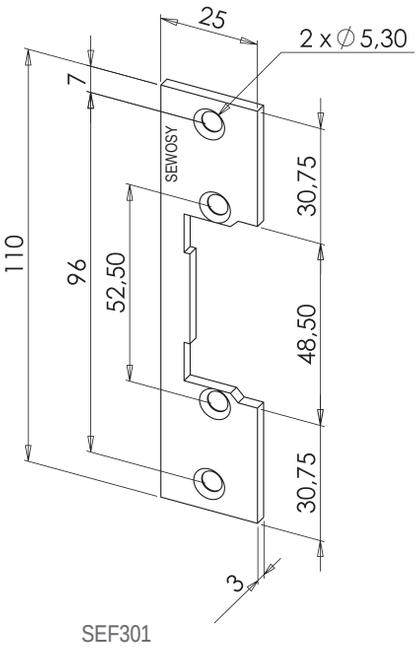

SEF301

The electric strikes from the SE series meet a basic need with efficiency. These are standard electric strikes, which can be flush-mounted in most of frames. All models include a varistor, to protect electronic against overloads. This varistor works as well with alternating or direct current.

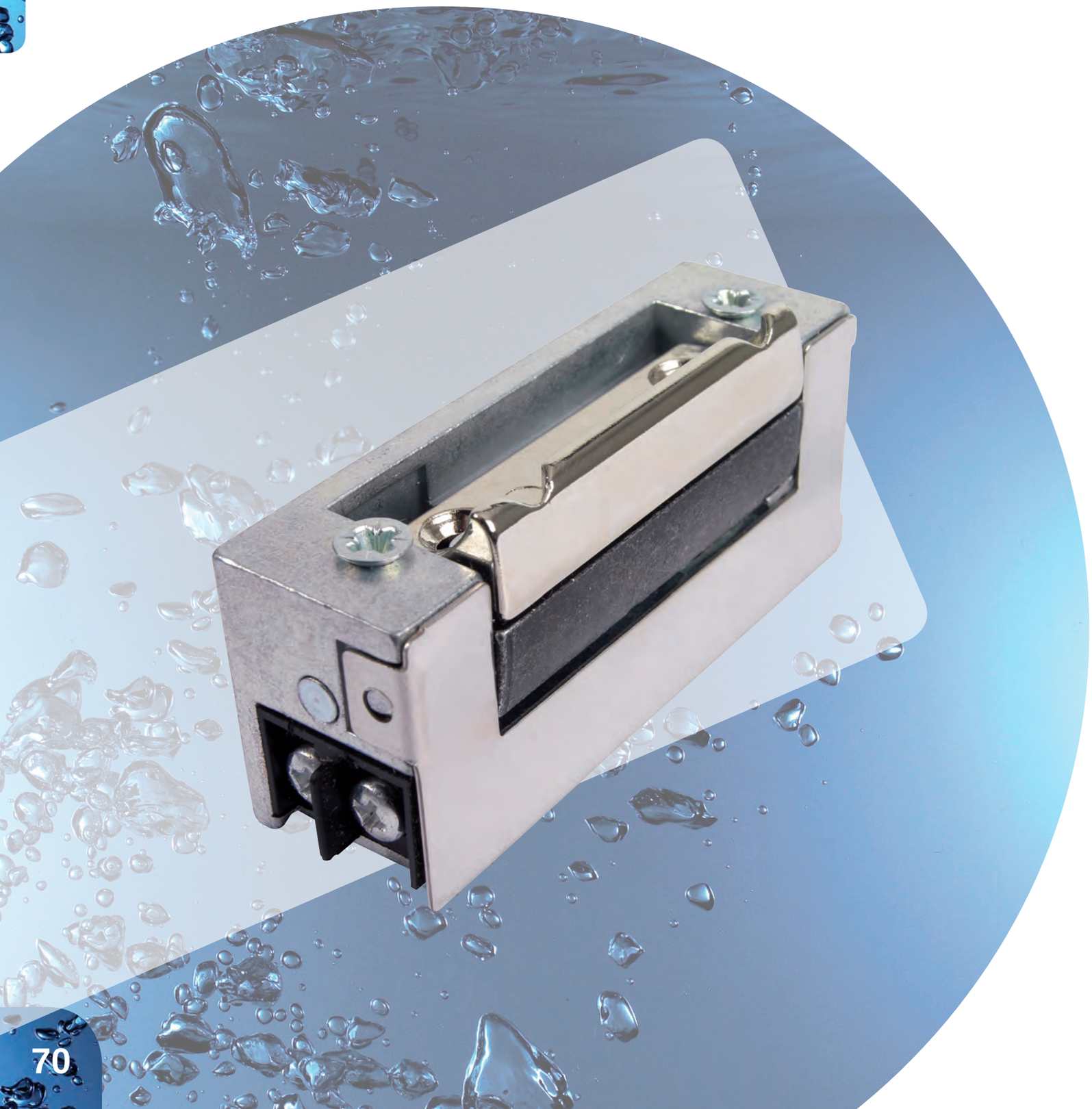

STANDARD ELECTRIC STRIKES SE SERIES

300 DaN *

* Maximal theoretical holding forces, for an implementation meeting the optimum laying conditions

- **Symmetrical**
- Adjustable latch (3 mm)

1 STANDARD

fail secure (power to open)

- Adjustable latch (3 mm)
- Varistor protecting against self-effect

SE1

CHARACTERISTICS

Dimensions H x W x D	67 x 20,5 x 28,5 mm		
V AC/DC	12V AC/DC	ImA AC/DC	1100 mA
IP	42	DaN	300*

* Maximal theoretical holding forces, for an implementation meeting the optimum laying conditions

SE1	Electric strike fail secure 12V AC/DC varistor against self-effect	0.2 kg	Customs code 83014019

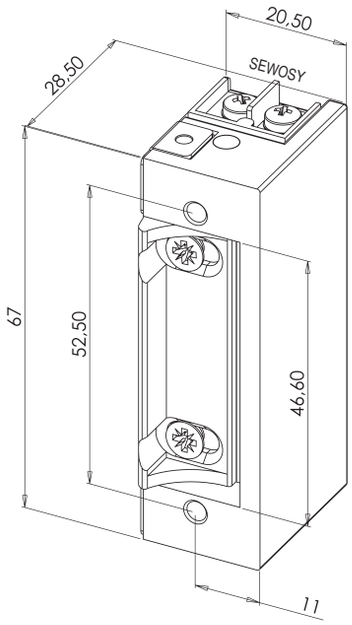

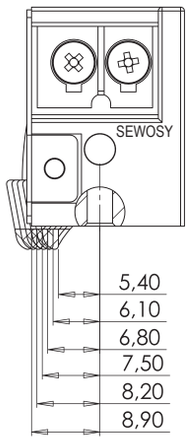

1 STANDARD OPEM

fail secure (power to open)

- Adjustable latch (3 mm)
- Varistor protecting against self-effect
- Permanent opening by mechanical level OPEM

SE1O

CHARACTERISTICS

Dimensions H x W x D	67 x 20,5 x 28,5 mm		
V AC/DC	12V AC/DC	ImA AC/DC	1100 mA
IP	42	DaN	300*

* Maximal theoretical holding forces, for an implementation meeting the optimum laying conditions

SE1O	Electric strike fail secure 12V AC/DC + OPEM	0.2 kg	Customs code 83014019

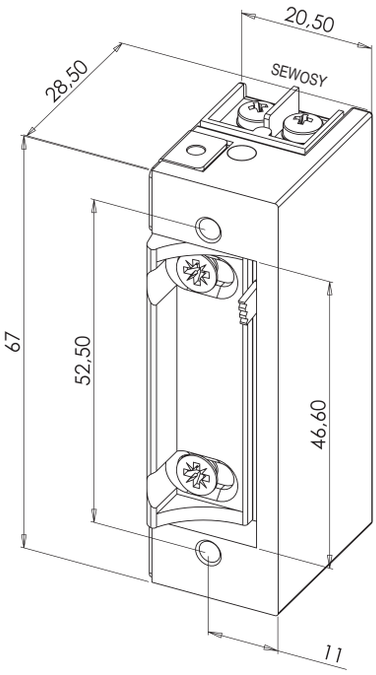

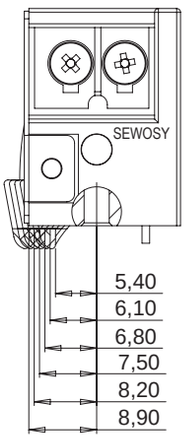

2 STANDARD

fail secure (power to open) with mechanical memory

- Adjustable latch (3 mm)
- Varistor protecting against self-effect

SE2

CHARACTERISTICS

Dimensions H x W x D	67 x 20,5 x 28,5 mm		
V AC/DC	12V AC/DC	ImA AC/DC	1100 mA
IP	42	DaN	300*

* Maximal theoretical holding forces, for an implementation meeting the optimum laying conditions

SE2	Electric strike fail secure 12V AC/DC with memory	0.2 kg	Customs code 83014019

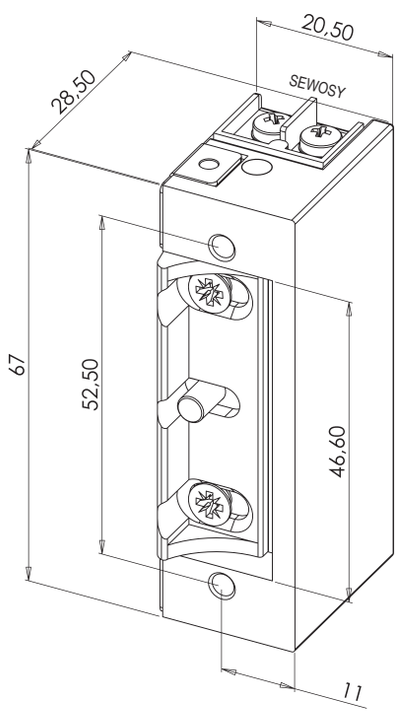

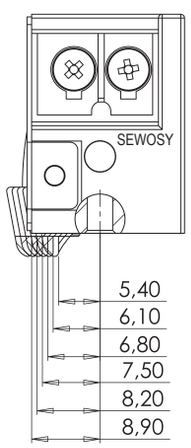

2 STANDARD OPEM

fail secure (power to open) with mechanical memory

- Adjustable latch (3 mm)
- Varistor protecting against self-effect
- Permanent opening by mechanical level OPEM

SE2O

CHARACTERISTICS

Dimensions H x W x D	67 x 20,5 x 28,5 mm		
V AC/DC	12V AC/DC	ImA AC/DC	1100 mA
IP	42	DaN	300*

* Maximal theoretical holding forces, for an implementation meeting the optimum laying conditions

SE2O	Electric strike fail secure 12V AC/DC with internal memory	0.2 kg	Customs code 83014019

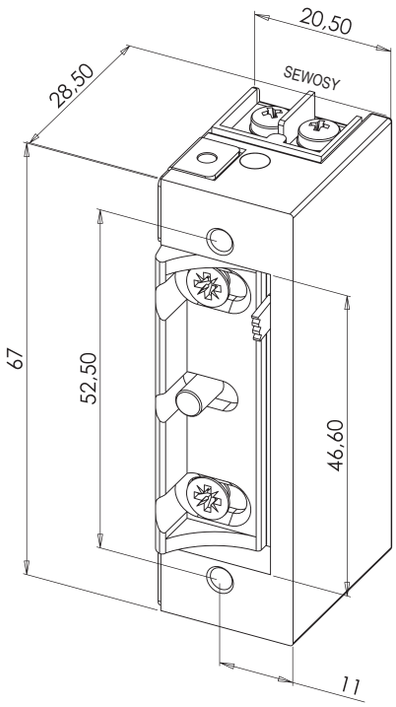

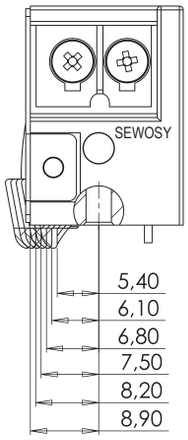

1 AND 2 STANDARDS

fail secure (power to open) - direct current
fail secure (power to open) - direct current with mechanical memory

- Adjustable latch (3 mm)
- Varistor protecting against self-effect

CHARACTERISTICS

Dimensions H x W x D	67 x 20,5 x 28,5 mm		
V DC	12V DC	ImA DC	270 mA
IP	42	DaN	300*

* Maximal theoretical holding forces, for an implementation meeting the optimum laying conditions

SE112

SE212

SE112	Electric strike fail secure 12V DC	0.2 kg	
SE212	Electric strike fail secure 12V DC with memory	0.2 kg	Customs code 83014019

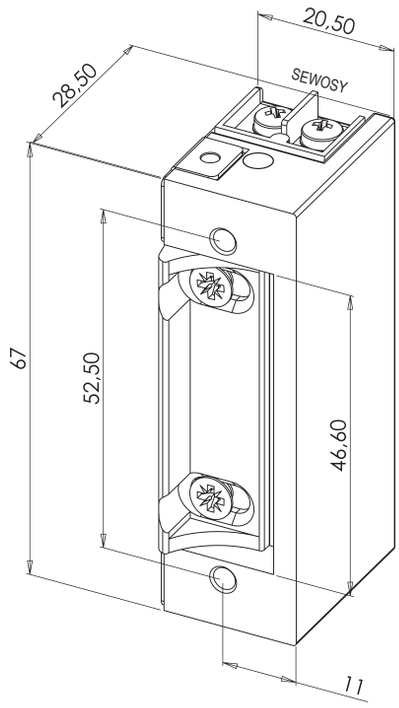

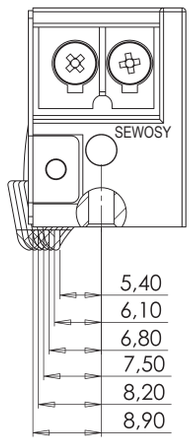

3 STANDARD

fail safe (power to lock)

- Adjustable latch (3 mm)
- Varistor protecting against self-effect

SE3

CHARACTERISTICS

Dimensions H x W x D	67 x 20,5 x 28,5 mm		
V DC	12V DC	ImA DC	220 mA
IP	42	DaN	300*

* Maximal theoretical holding forces, for an implementation meeting the optimum laying conditions

SE3	Electric strike fail safe 12V DC	0.2 kg	Customs code 83014019

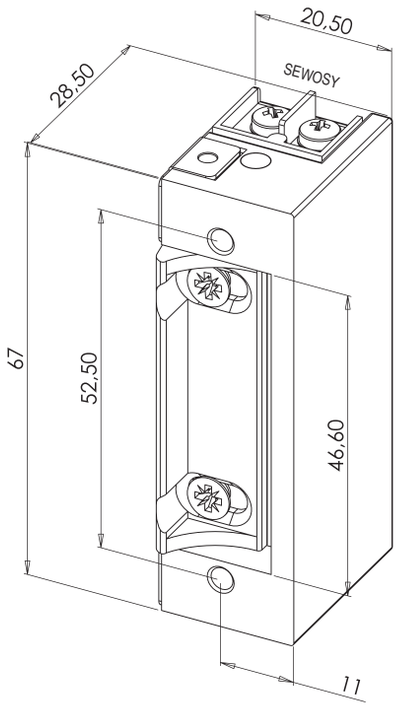

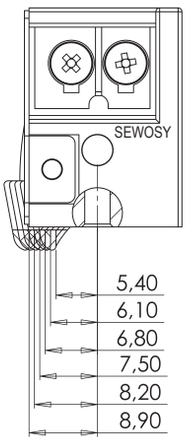

FACE PLATES

for standard electric strikes

- Suitable for most profiles
- Stainless steel
- 2 to 4 fixing points

CHARACTERISTICS

Dimensions H x W x D	SEF201 SEF203 SEF301	250 x 25 x 3 mm 250 x 24 x 3 mm 110 x 25 x 3 mm

SEF201 SEF203 SEF301

SEF201	Long reversible face plate 250 mm 2 holes stainless steel	0,1 kg	
SEF203	Long reversible face plate 250 mm 1 hole stainless steel	0,1 kg	
SEF301	Short reversible face plate 110 mm 1 hole stainless steel	0,1 kg	Customs code 83014019

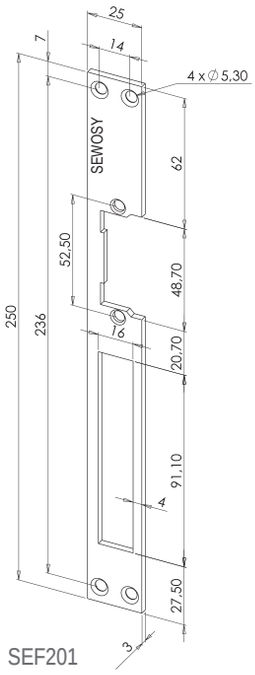

SEF201

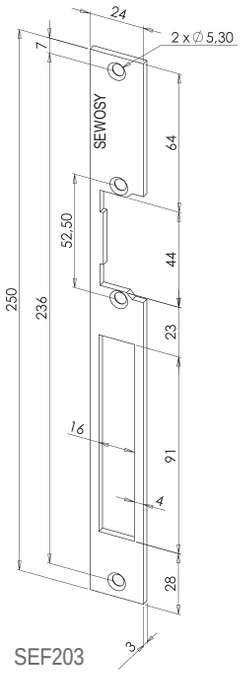

SEF203

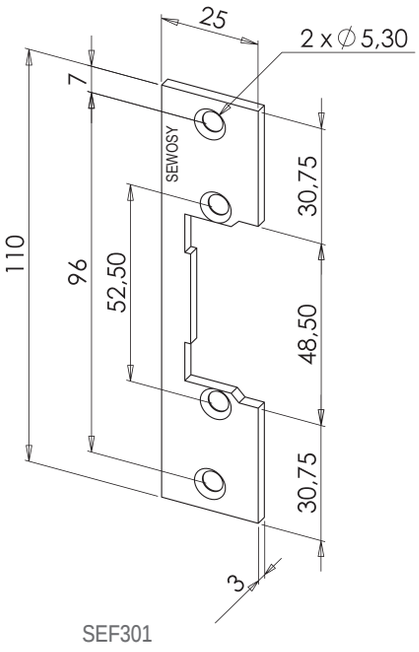

SEF301

Quality, a requirement at each manufacturing step

- Investment in advanced technologies
- Continuous quality control
- Tailored production tools

The mortise electromagnetic locks from EF…ENC CA series are ideal for a discreet and secured installation into most profiles. Easy to connect with a screw terminal block, these electromagnetic locks benefit from a careful manufacture ensuring them great sustainability.

VELMAG™ MORTISE-MOUNT EM LOCKS

1000 DaN *

540 DaN

500 DaN

300 DaN

150 DaN

- **Without residual magnetism**
- **Easy mounting**
- **E-PLATES technology (except for Shearlock)**

* Maximal theoretical holding forces, for an implementation meeting the optimum laying conditions

VELMAG™ MORTISE ELECTROMAGNETIC LOCKS

150 DaN

- Connection by removable screw terminal block
- Locked / unlocked status sensor by REED contact (CTC model)
- Anti-remanence device by ejector

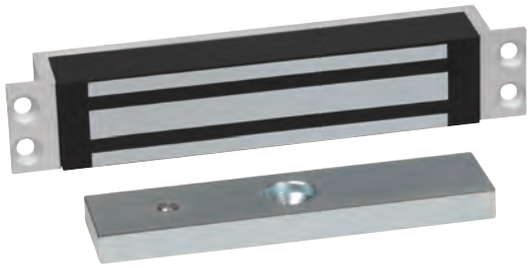

EF150ENC CA

CHARACTERISTICS

Dimensions H x W x D		Electromagnet Armature plate	31,8 x 173 x 25,70 mm 33 x 130 x 11 mm - M8
V DC	12-24V DC	ImA DC	480-240 mA
°C	-10°C +55°C	IP	42
V/A	24V DC-1 A	DaN	150*

* Maximal theoretical holding forces, for an implementation meeting the optimum laying conditions

PCB/EF30035CTC
(for EF150ENCCTC CA)

PCB/EF30035
(for EF150ENC CA)

EF150ENC CA	Mortise electromagnetic lock 150 DaN 12-24V DC	1,3 kg	
EF150ENCCTC CA	Mortise electromagnetic lock 150 DaN 12-24V DC + contact	1,3 kg	Customs code 83014019

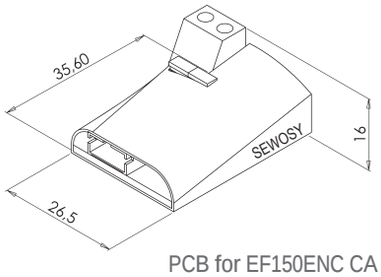

PCB for EF150ENC CA

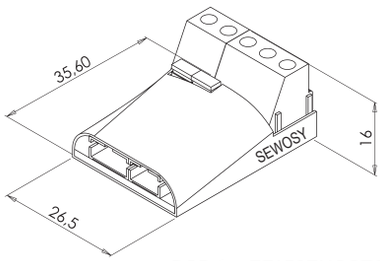

PCB for EF150ENCCTC CA

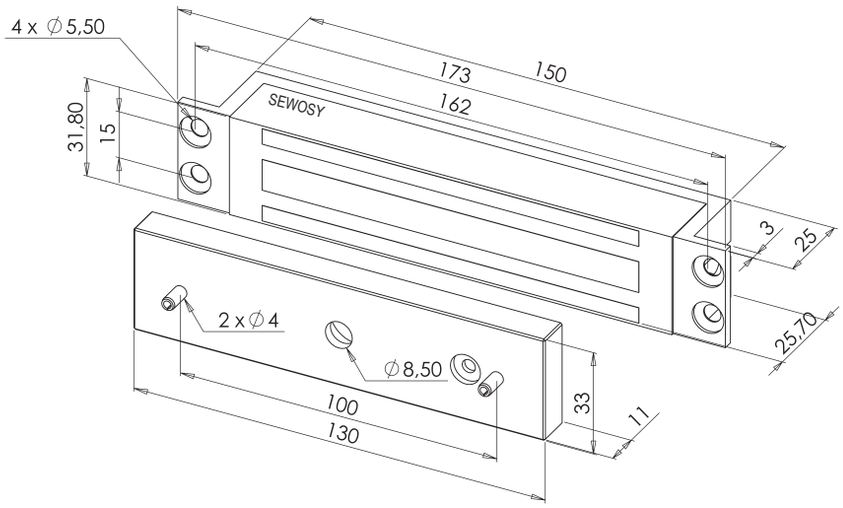

MPA N° P-120001624.25

VELMAG™ MORTISE ELECTROMAGNETIC LOCKS

300 DaN

- Suitable for most profiles
- Connection by removable screw terminal block
- Locked / unlocked status sensor by REED contact (CTC model)
- Anti-remanence device by ejector

Removable lateral mounting wings

EF300ENC CA

CHARACTERISTICS

Dimensions H x W x D		Electromagnet Armature plate	37,70 x 227 x 27 mm 38 x 180 x 11 mm - M8
V DC	12-24V DC	ImA DC	480-240 mA
°C	-10°C +55°C	IP	42
V/A	24V DC-1 A	DaN	300*

* Maximal theoretical holding forces, for an implementation meeting the optimum laying conditions

PCB/EF30035CTC
(for E300ENCCTC CA)

PCB/EF30035
(for E300ENC CA)

EF300ENC CA	Mortise electromagnetic lock 300 DaN 12-24V DC	2 kg	
EF300ENCCTC CA	Mortise electromagnetic lock 300 DaN 12-24V DC + contact	2 kg	Customs code 83014019

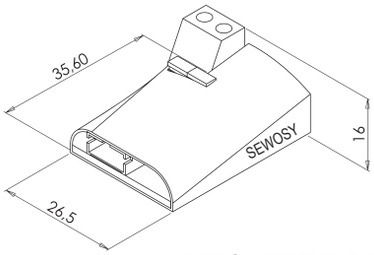

PCB for EF300ENC CA

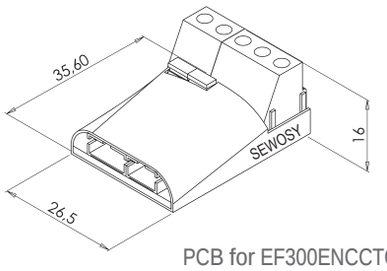

PCB for EF300ENCCTC CA

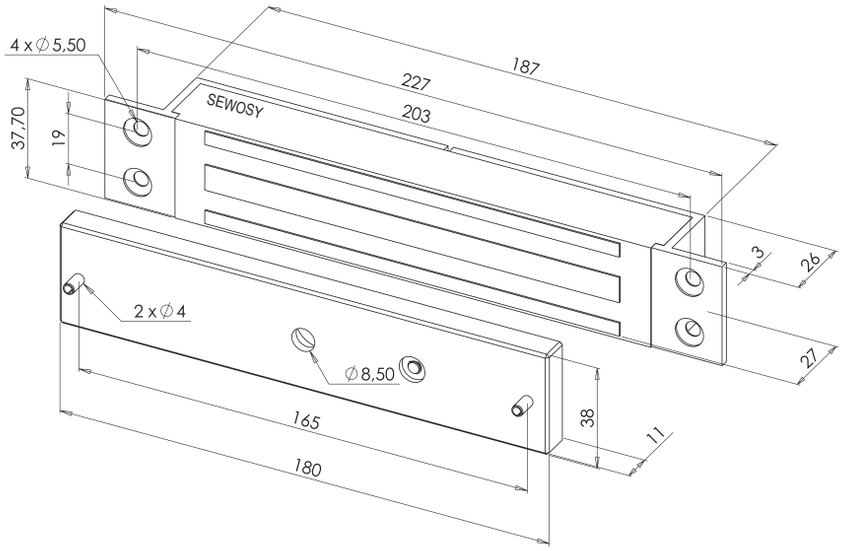

VELMAG™ MORTISE EM LOCKS 35 MM without stainless steel body

300 DaN

- Suitable for narrow profiles
- Fixing by rear press screw or lateral wings
- Connection by removable screw terminal block
- Locked / unlocked status sensor by REED contact (CTC model)
- Anti-remanence device by ejector

2 fixing variants: by rear press screw or lateral wings

V30035

CHARACTERISTICS

Dimensions H x W x D	Electromagnet Armature plate	35 x 196,50 x 25,5 mm 38 x 180 x 11 mm - M8	
V DC	12-24V DC	ImA DC	480-240 mA
°C	-10°C +55°C	IP	42
V/A	24V DC-1 A	DaN	300*

* Maximal theoretical holding forces, for an implementation meeting the optimum laying conditions

PCB/EF30035
(for V30035)

PCB/EF30035CTC
(for V30035C)

V30035	Mortise electromagnetic lock 35,5 mm 300 DaN 12-24V DC	2 kg	
V30035C	Mortise electromagnetic lock 35,5 mm 300 DaN 12-24V DC + CTC	2 kg	Customs code 83014019

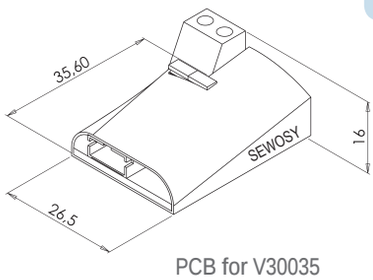

PCB for V30035

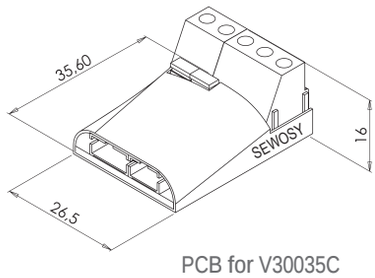

PCB for V30035C

with lateral wings

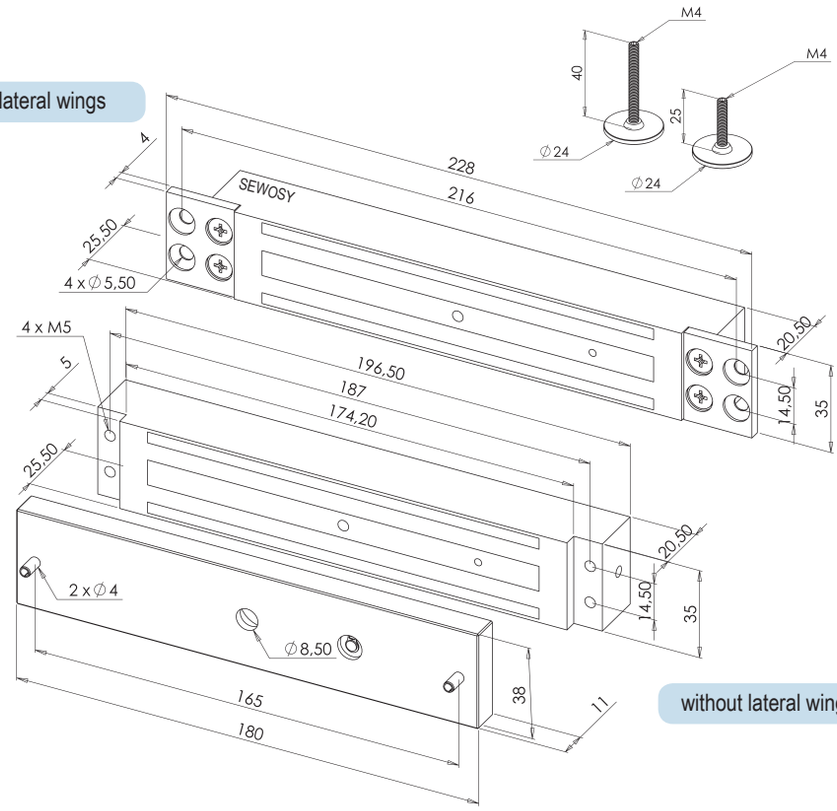

without lateral wings

TÜV EF30035ENCCTC CA N° P-3263/08

VELMAG™ MORTISE EM LOCKS 35 MM with stainless steel body

300 DaN

- Electromagnetic lock body in stainless steel
- Suitable for narrow profiles
- Fixing by rear press screw or lateral wings
- Connection by removable screw terminal block
- Locked / unlocked status sensor by REED contact (CTC model)
- Anti-remanence device by ejector

2 fixing variants: by rear press screw or lateral wings

EF30035ENC CA

CHARACTERISTICS

Dimensions H x W x D		Electromagnet Armature plate	35,5 x 195 x 27 mm 38 x 180 x 11 mm - M8
V DC	12-24V DC	ImA DC	480-240 mA
°C	-10°C +55°C	IP	42
V/A	24V DC-1 A	DaN	300*

* Maximal theoretical holding forces, for an implementation meeting the optimum laying conditions

PCB/EF30035
(for EF30035ENC CA)

PCB/EF30035CTC
(for EF30035ENCCTC CA)

EF30035ENC CA	Mortise electromagnetic lock 35,5 mm 300 DaN 12-24V DC	2 kg	
EF30035ENCCTC CA	Mortise electromagnetic lock 35,5 mm 300 DaN 12-24V DC + contact	2 kg	Customs code 83014019

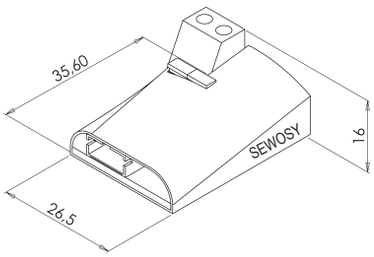

PCB for EF30035ENC CA

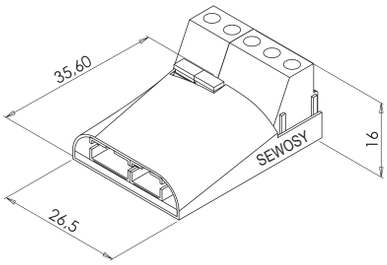

PCB for EF30035ENCCTC CA

with lateral wings

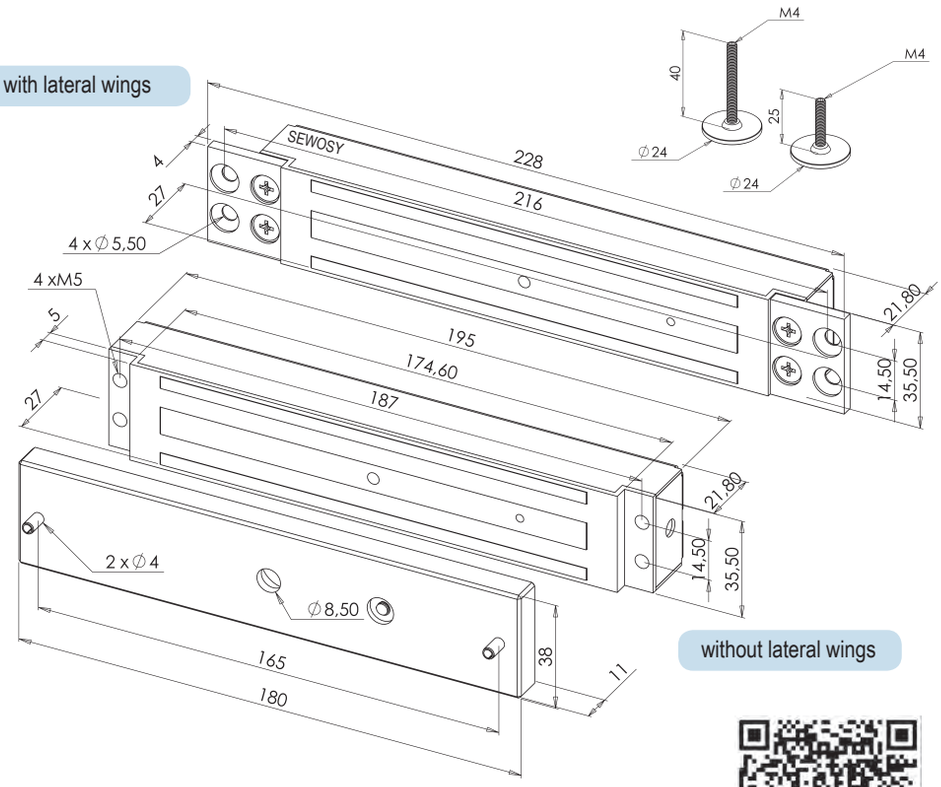

without lateral wings

TÜV N° P-3486/09

VELMAG™ MORTISE ELECTROMAGNETIC LOCKS

500 DaN

Fixing by rear press screws

- Fixing by two rear press screws
- Connection by removable screw terminal block
- Locked / unlocked status sensor by REED contact (CTC model)
- Anti-remanence device by ejector

EF550ENC CA

CHARACTERISTICS

Dimensions H x W x D		Electromagnet Armature plate	61,3 x 190 x 38 mm 61 x 185 x 16,5 mm - M8
V DC	12-24V DC	ImA DC	480-240 mA
°C	-10°C +55°C	IP	42
V/A	24V DC-1 A	DaN	500*

* Maximal theoretical holding forces, for an implementation meeting the optimum laying conditions

PCB/EF30035
(for EF550ENC CA)

PCB/EF30035CTC
(for EF550ENCCTC CA)

EF550ENC CA	Mortise electromagnetic lock 500 DaN 12-24V DC	5 kg	
EF550ENCCTC CA	Mortise electromagnetic lock 500 DaN 12-24V DC + contact	5 kg	Customs code 83014019

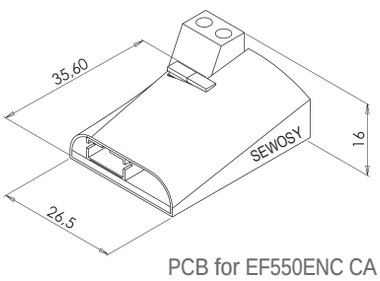

PCB for EF550ENC CA

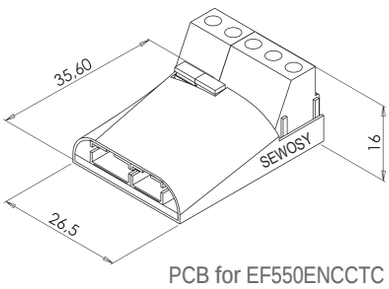

PCB for EF550ENCCTC CA

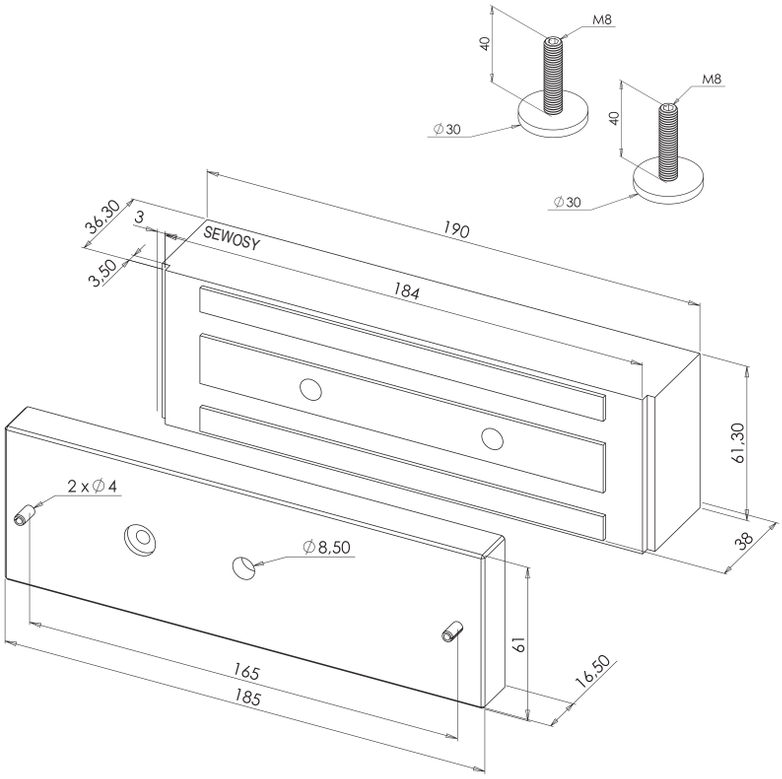

VELMAG™ MORTISE ELECTROMAGNETIC LOCKS (SHEARLOCK)

540 DaN

- Mounting on single or double action door
- Horizontal or vertical installation
- Mortise or surface-mount (with SH540BT)
- Locked / unlocked status by HALL sensor (CTC model)

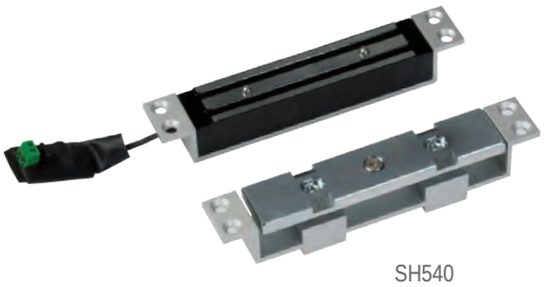

SH540

CHARACTERISTICS

		SH540 / SH540CTC
Dimensions H x W x D	Electromagnet	30 x 180 x 27,1 mm
	Armature plate	30 x 180 x 33 mm
	Housing	27 x 182 x 35,5 mm
	U bracket	48 x 182 x 14 mm

V DC	12-24V DC	lmA DC	SH540 / SH540CTC	420-210 mA
°C	SH540 / SH540CTC -10 +60 °C	V/A	SH540 / SH540CTC	30V DC-3 A
IP	20	DaN	SH540 /SH540CTC	540*

* Maximal theoretical holding forces, for an implementation meeting the optimum laying conditions

SH540	Shearlock electromagnetic lock 540 DaN 12-24V DC	1,2 kg	
SH540CTC	Shearlock electromagnetic lock 540 DaN 12-24V DC + contact 10,2-27,6 VDC	1,2 kg	
SH540BT	Surface housing for SH540 (2 pcs) with 4 spacers	0,5 kg	
SH540U	U bracket for glass door for SH540BT - by pair Glass thickness : 14 mm max.	0,4 kg	Customs code 83014019

SH540 / SH540CTC

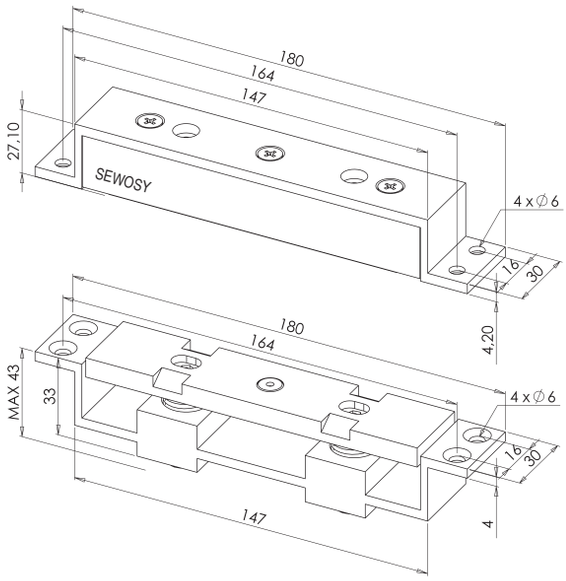

The mortise electromagnetic locks from EF…ENC series are ideal for an installation as discreet and secured as an emergency exit requirement. These electromagnetic locks have indeed a test report NF S 61-937 in 24V DC. Connected through screw terminal block, they come standardly with 4 meters cable and the mandatory housing for guaranteeing the sealing of connection, as defined by the NF S 61-937 norm.

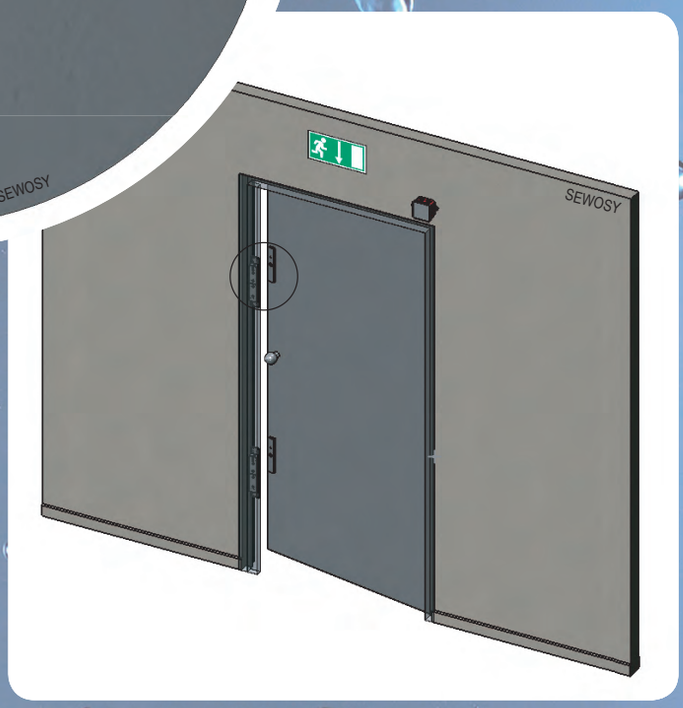

NF S 61-937 VELMAG™ MORTISE EM LOCKS

300 DaN *

CE

NFS 61937

24 VOLTS DC

* Maximal theoretical holding forces, for an implementation meeting the optimum laying conditions

- **Meet NF S 61-937**
- **Without residual magnetism**
- **Easy mounting**
- **E-PLATES technology**

NF S 61-937 VELMAG™ MORTISE ELECTROMAGNETIC LOCKS

300 DaN

- Comes with 4 m cable and connection housing
- Suitable for most profiles
- Connection by removable screw terminal block
- Anti-remanence device by ejector

NF S 61 937 **PV N°** 11/1547/RG1 - LCPP

EF300ENC

PCB/EF30035
(supplied)

CHARACTERISTICS

Dimensions H x W x D		Electromagnet Armature plate	37,70 x 227 x 27 mm 38 x 180 x 11 mm - M8
V DC	12-24V DC	ImA DC	480-240 mA
°C	-10°C +55°C	IP	42
DaN	300*		

* Maximal theoretical holding forces, for an implementation meeting the optimum laying conditions

EF300ENC	Mortise electromagnetic lock 300 DaN 24V DC	2,5 kg	Customs code 83014019

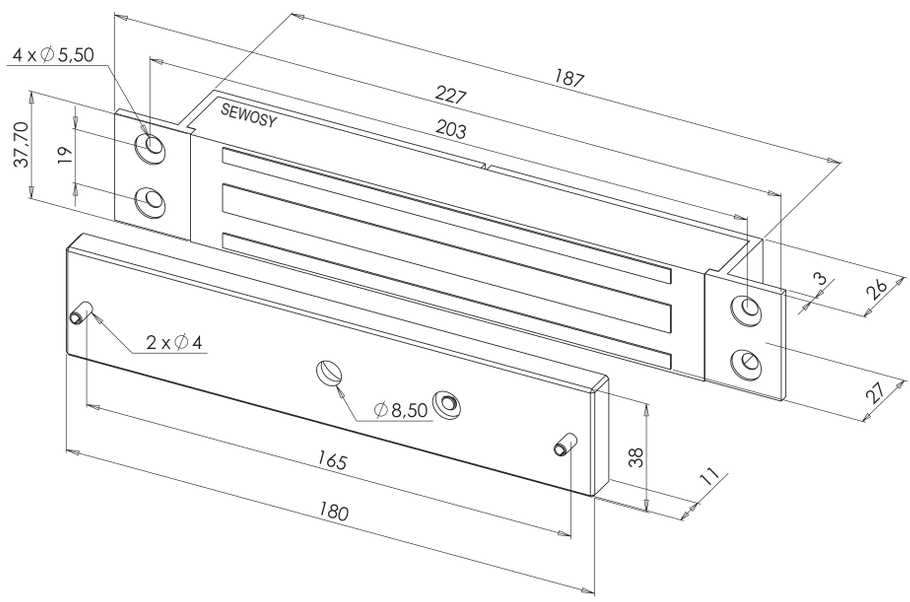

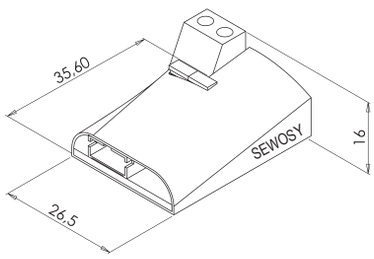

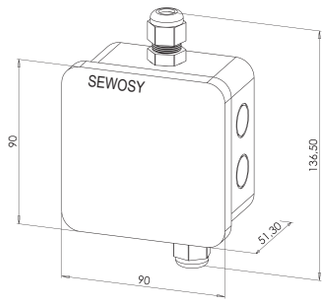

NF S 61-937 VELMAG™ MORTISE ELECTROMAGNETIC LOCKS FOR NARROW PROFILES

300 DaN

- Comes with 4 m cable and connection housing
- Electromagnetic lock body in stainless steel
- Suitable for narrow profiles
- Fixing by rear press screw or lateral wings
- Connection by removable screw terminal block
- Anti-remanence device by ejector

NF S 61 937 **PV N°** 13/8400/RG1 - LCPP

EF30035ENC

CHARACTERISTICS

Dimensions H x W x D		Electromagnet Armature plate	35,5 x 195 x 27 mm 38 x 180 x 11 mm - M8
V DC	12-24V DC	ImA DC	480-240 mA
°C	-10°C +55°C	IP	42
DaN	300*		

* Maximal theoretical holding forces, for an implementation meeting the optimum laying conditions

PCB/EF30035
(supplied)

EF30035ENC	Mortise electromagnetic lock 35,5 mm 300 DaN 24V DC	2,5 kg	Customs code 83014019

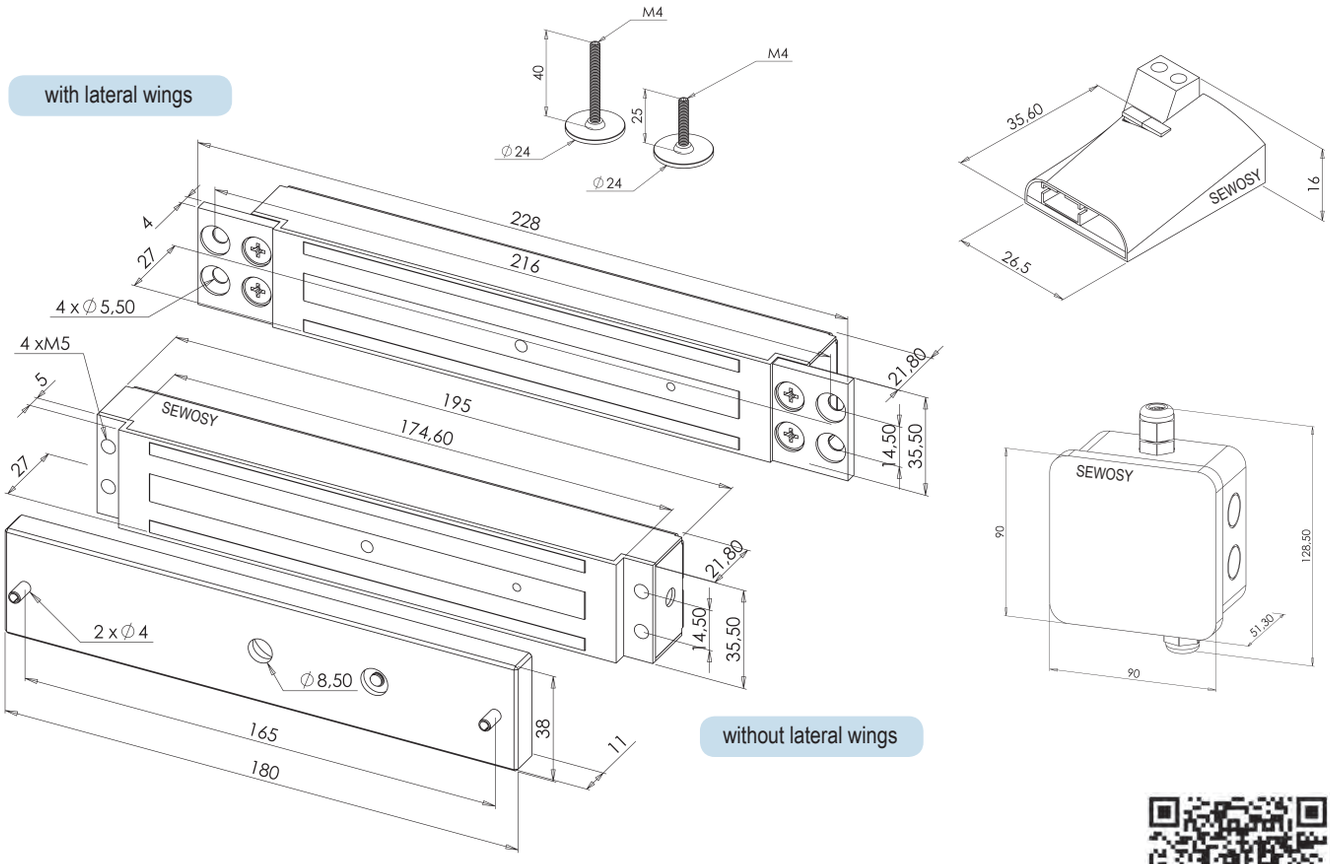

Most of the surface-mount electromagnetic locks from EF range are in compliance with the NF S 61-937 standard in 24V or 48V DC.
Especially easy to mount, notably with installation accessories designed to maintain their nominal strength at minimum, they are connected by terminal screw block. Moreover, their anti-removal system protects them against vandalism when the door is closed and locked.

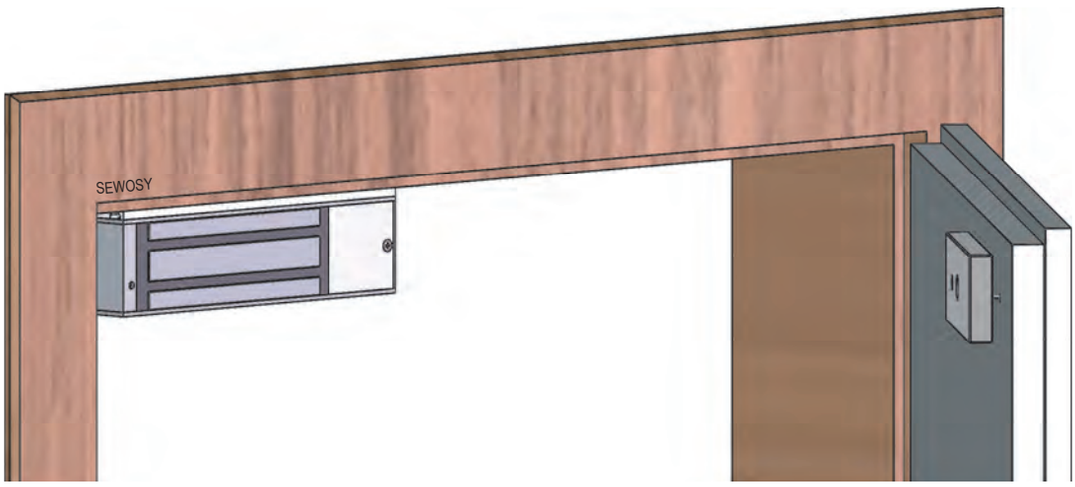

VELMAG™ SURFACE-MOUNT EM LOCKS

CE

500 DaN *

300 DaN

150 DaN

- Without residual magnetism
- Easy mounting
- E-PLATES technology
- Integrated anti-disassemble device (according to model)
- Same Z adjustable bracket for EF300 and EF550 series
- Universal finishing cover for pulling and pushing doors
- Complete range of accessories – ideal for numerous applications

* Maximal theoretical holding forces, for an implementation meeting the optimum laying conditions

VELMAG™ SURFACE ELECTROMAGNETIC LOCKS

150 DaN

- Satin aluminium housing
- Connection by screw terminal block
- Locked / unlocked status by HALL sensor (CTC model)
- Anti-remanence device by ejector

EF150

CHARACTERISTICS

Dimensions H x W x D		Electromagnet Armature plate	39,70 x 210 x 22,10 mm 33 x 130 x 11 mm - M8
V DC	12-24V DC	ImA DC	480-240 mA
°C	-10°C +55°C	IP	42
V/A	24V DC-2 A	DaN	150*

* Maximal theoretical holding forces, for an implementation meeting the optimum laying conditions

EF150	Surface electromagnetic lock 150 DaN 12-24V DC	1,2 kg	
EF150CTC	Surface electromagnetic lock 150 DaN 12-24V DC contact + LED	1,2 kg	Customs code 83014019

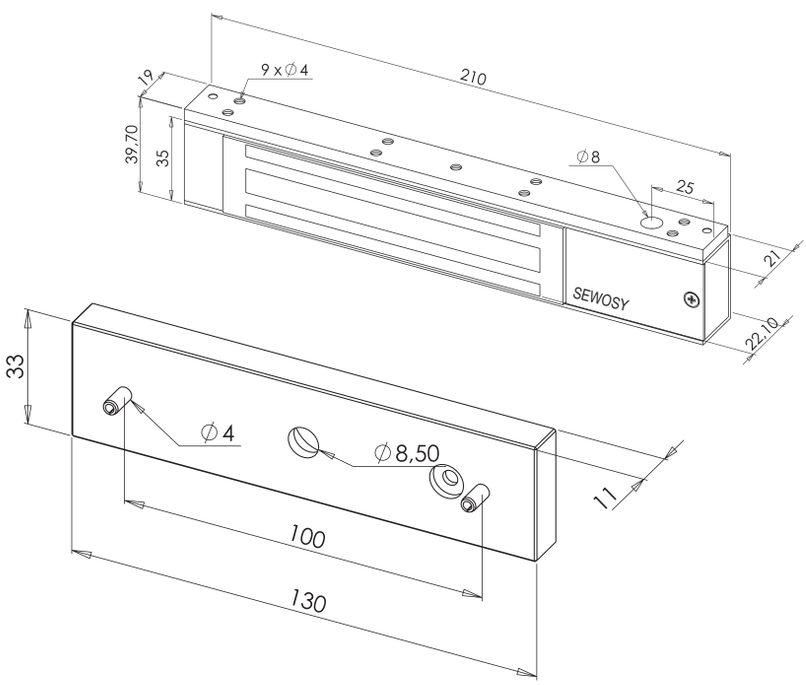

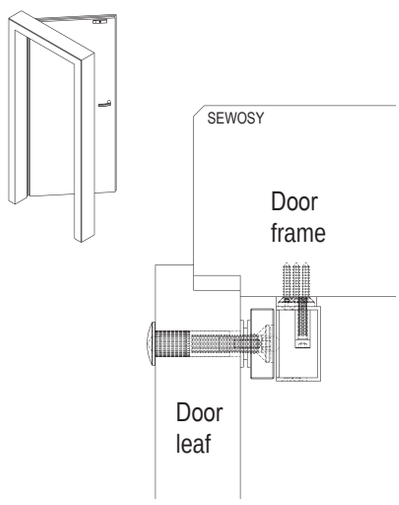

VELMAG™ SURFACE DOUBLE ELECTROMAGNETIC LOCKS

150 DaN

- Suitable for double leaf doors
- Satin aluminium housing
- Connection by screw terminal block
- Locked / unlocked status by HALL sensor (CTC model)
- Anti-remanence device by ejector

EF150-2

CHARACTERISTICS

Dimensions H x W x D		Electromagnet Armature plate	39,70 x 420 x 22,10 mm 33 x 130 x 11 mm - M8
V DC	12-24V DC	ImA DC	960-480 mA
°C	-10°C +55°C	IP	42
V/A	24V DC-2 A	DaN	150*

* Maximal theoretical holding forces, for an implementation meeting the optimum laying conditions

EF150-2	Surface double electromagnetic lock 2 x 150 DaN 12-24V DC	2,4 kg	
EF150-2CTC	Surface double electromagnetic lock 2 x 150 DaN 12-24V DC contact + LED	2,4 kg	Customs code 83014019

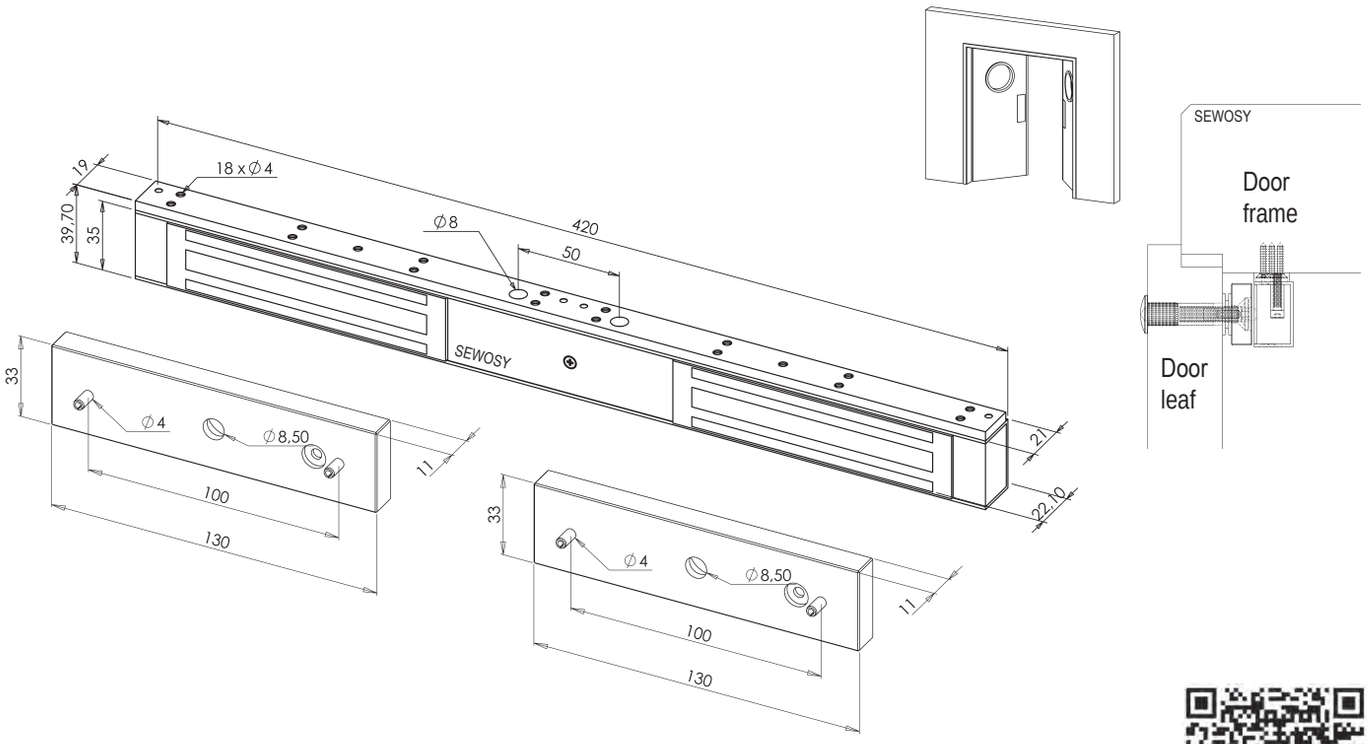

MOUNTING ACCESSORIES

for VELMAG™ surface electromagnetic locks EF150

EF150L

- Satin aluminium finishing

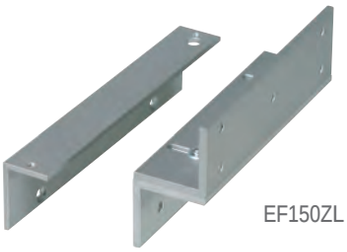

EF150ZL

CHARACTERISTICS

Dimensions H x W x D	EF150L EF150ZL EF150U	38 x 210 x 25 mm 76 x 140 x 38 mm 39 x 130 x 24,5 mm

Caution:
Two mounting accessories required for double EM locks

EF150U

EF150L	L bracket for EF150 range	0,1 kg	
EF150ZL	ZL bracket for EF150 range	0,4 kg	
EF150U	U bracket for glass door 10-13 mm for EF150 range	0,2 kg	Customs code 83014019

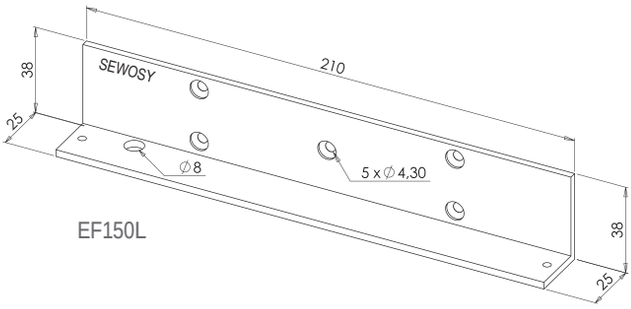

EF150L

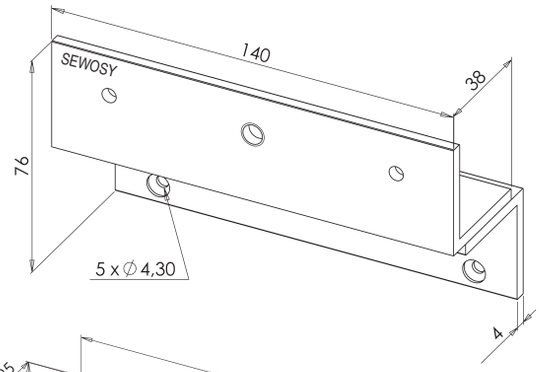

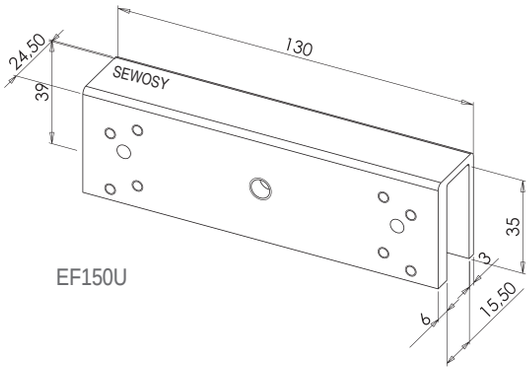

EF150U

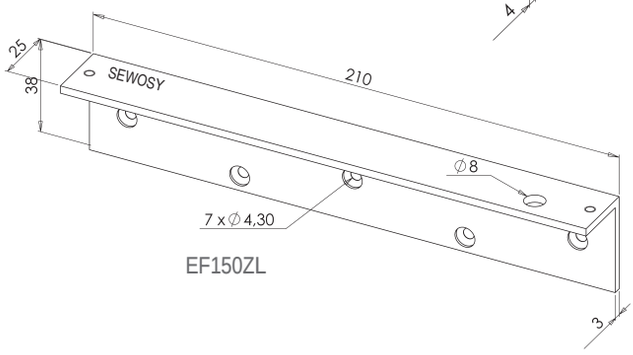

EF150ZL

INSTALLATION DIAGRAMS

accessories for VELMAG™ surface electromagnetic locks EF150

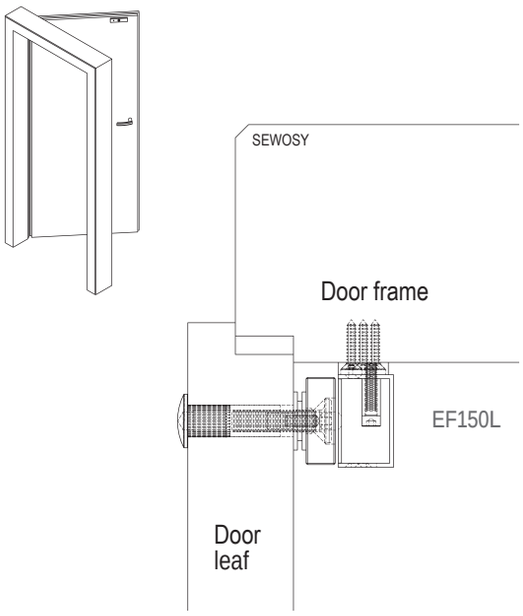

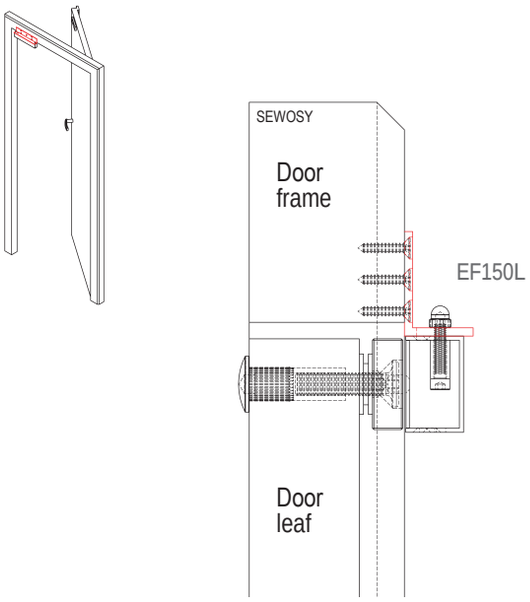

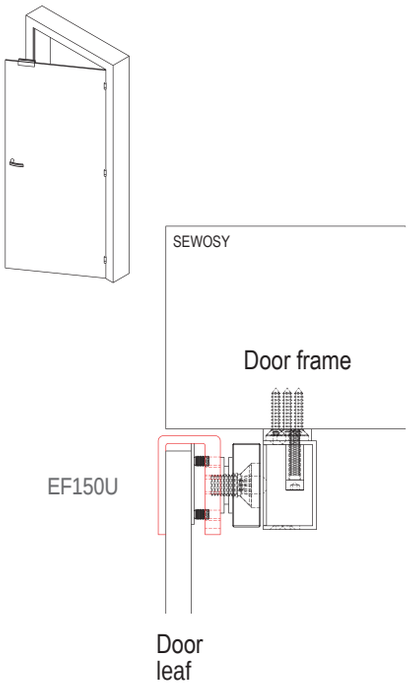

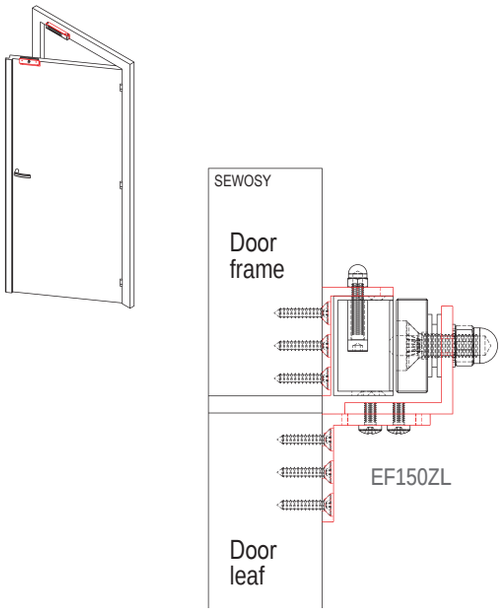

VELMAG™ SURFACE ELECTROMAGNETIC LOCKS
NF S 61-937 COMPLIANT

300 DaN

- Integrated anti-disassemble device
- Satin aluminium housing
- Connection by screw terminal block
- Locked / unlocked status by HALL sensor (CTC model)
- Anti-remanence device by ejector

EF300

CHARACTERISTICS

Dimensions H x W x D	Electromagnet	48,40 x 250 x 25,85 mm
	Armature plate	38 x 180 x 11 mm - M8

V DC	12-24V DC	ImA DC	480-240 mA
°C	-10°C +55°C	IP	42
V/A	24V DC-2 A	DaN	300*

* Maximal theoretical holding forces, for an implementation meeting the optimum laying conditions

NF S 61 937 **PV N°** 13/2211/RG1 - LCPP

MPA **N°** P-120001624.15

EF300	Surface electromagnetic lock 300 DaN 12-24V DC	2 kg	
EF300CTC	Surface electromagnetic lock 300 DaN 12-24V DC contact + LED	2 kg	Customs code 83014019

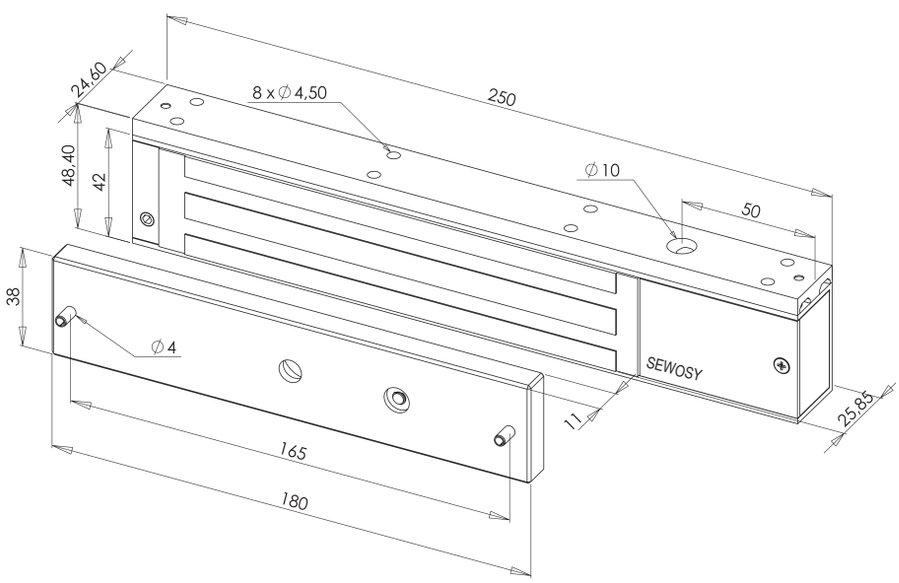

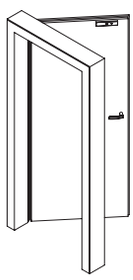

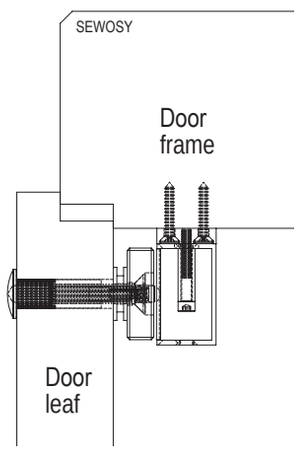

VELMAG™ SURFACE DOUBLE ELECTROMAGNETIC LOCKS NF S 61-937 COMPLIANT

300 DaN

- Suitable for double leaf doors
- Integrated anti-disassemble device
- Satin aluminium housing
- Connection by screw terminal block
- Locked / unlocked status by HALL sensor (CTC model)
- Anti-remanence device by ejector

EF300-2

CHARACTERISTICS

Dimensions H x W x D		Electromagnet Armature plate	48,40 x 500 x 25,85 mm 38 x 180 x 11 mm - M8
V DC	12-24V DC	ImA DC	960-480 mA
°C	-10°C +55°C	IP	42
V/A	24V DC-2 A	DaN	2 x 300*

* Maximal theoretical holding forces, for an implementation meeting the optimum laying conditions

NF S 61 937 **PV N°** 13/2211/RG1 - LCPP

MPA **N°** P-120001624.15

EF300-2	Surface double electromagnetic lock 2 x 300 DaN 12-24V DC	4 kg	
EF300-2CTC	Surface double electromagnetic lock 2 x 300 DaN 12-24V DC contact + LED	4 kg	Customs code 83014019

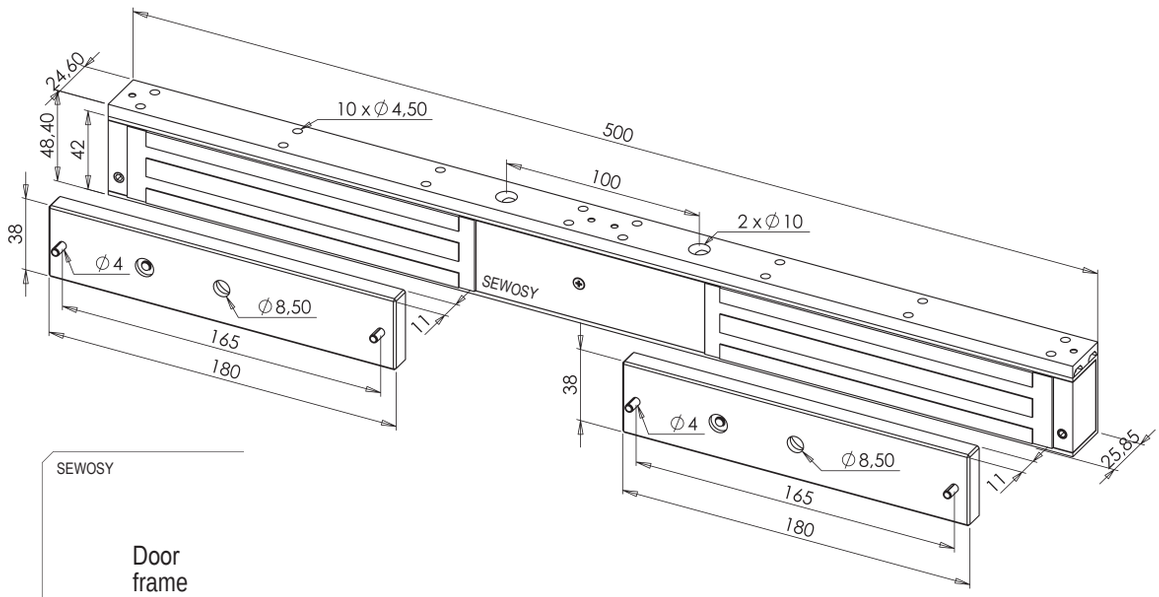

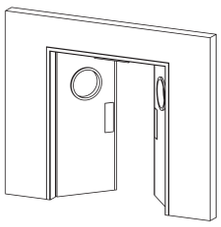

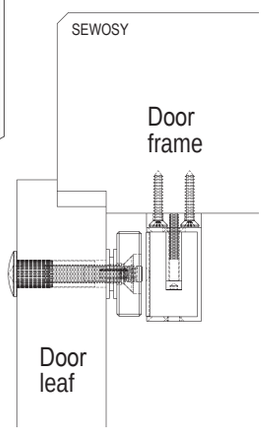

MOUNTING ACCESSORIES

for VELMAG™ surface electromagnetic locks EF300

- Aluminium type 6061/T6
- Reinforced resistance by ridges
- High accuracy adjustment
- Z bracket in common with EF300 and EF550 series
- Z bracket offering fine and definitive fitting

EF300L

CHARACTERISTICS

Dimensions H x W x D	EF300L EF300/550Z	30,2 x 250 x 48 mm 118 x 185 x 55,5 mm

EF300/550Z

EF300L	Adjustable L bracket for EF300 range	0,3 kg	
EF300/550Z	Adjustable Z bracket for EF300 / EF550 range	0,9 kg	Customs code 83014019

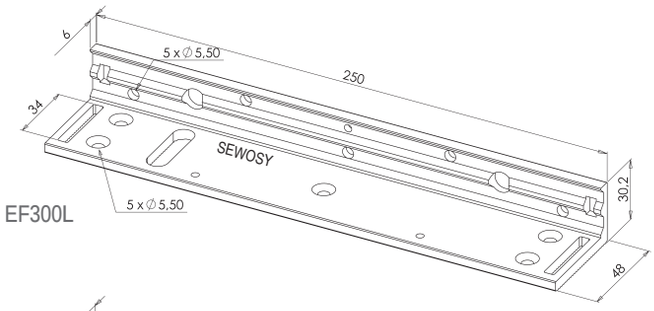

EF300L

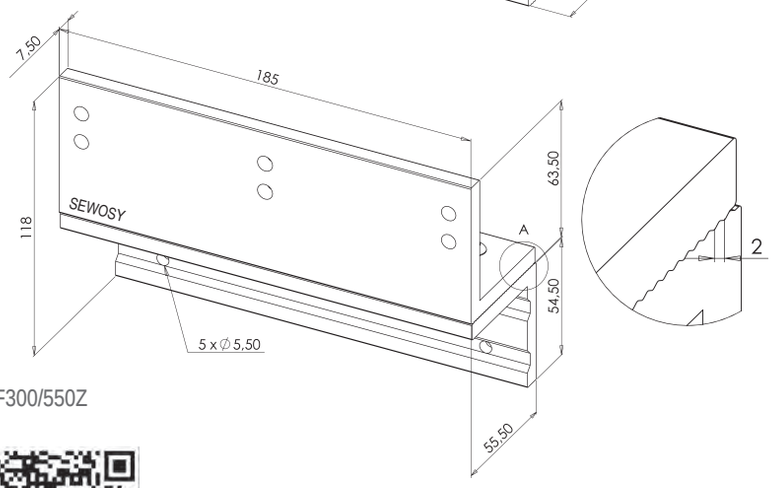

EF300/550Z

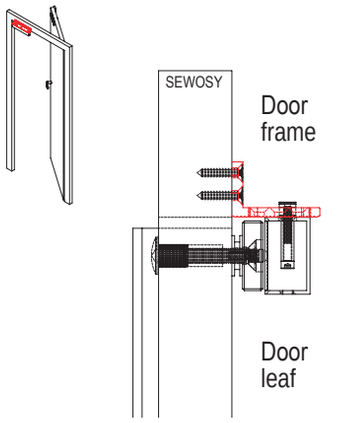

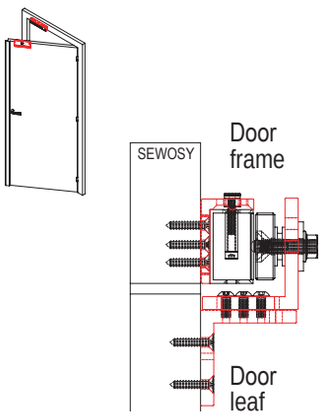

MOUNTING ACCESSORIES

for VELMAG™ surface electromagnetic locks EF300

- Aluminium type 6061/T6
- Without fixings traversing door
- U brackets in common with EF300 and EF550 series

EF300SCP

EF300_550UZAP

EF300_550UL

CHARACTERISTICS

Dimensions H x W x D	EF300SCP EF300_550UZAP EF300_550UL	45 x 187 x 17 mm 64,75 x 185 x 29,5 mm 64,75 x 266 x 29,5 mm

EF300SCP	Mounting set for armature plate EF300 range	0,2 kg	
EF300_550UZAP	U-Mounting sleeve for glass doors in combination with EF300_550Z	0,52 kg	
EF300_550UL	U-Mounting sleeve for glass doors in combination with EF300_550L	0,74 kg	Customs code 83014019

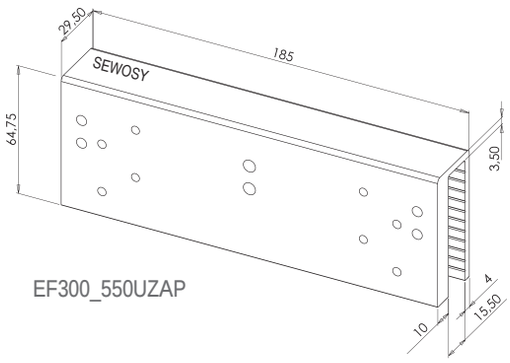

EF300_550UZAP

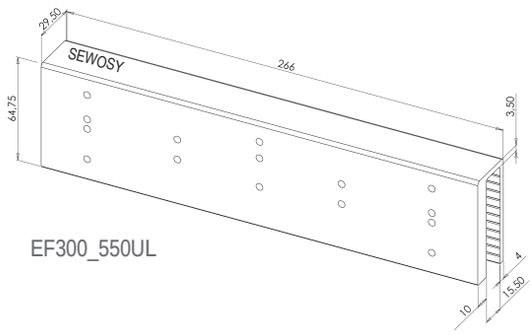

EF300_550UL

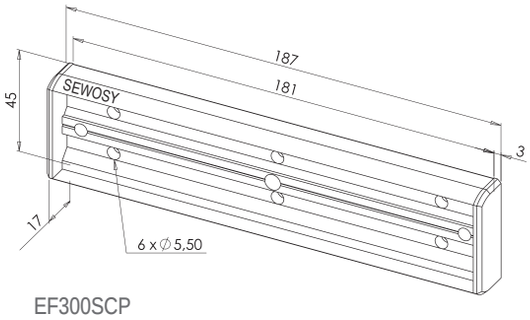

EF300SCP

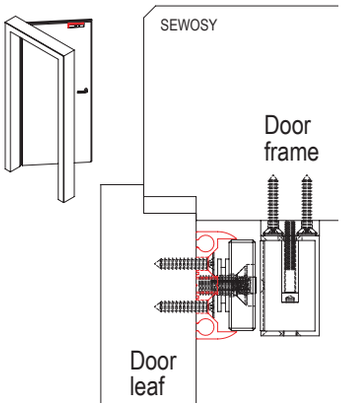

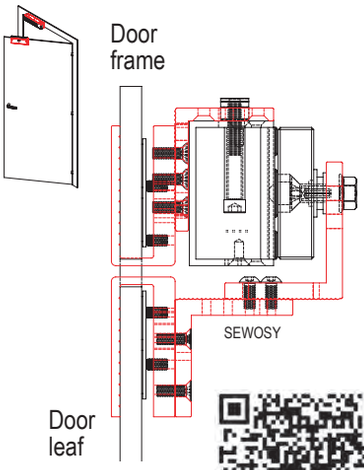

MOUNTING ACCESSORIES

for VELMAG™ surface electromagnetic locks EF300

- Improves aesthetics of installation
- Customizable in all RAL colors
- Fitting on pulling or pushing door
- Aluminium end caps (EF300C/AEC)

EF300C

CHARACTERISTICS

Dimensions H x W x D	EF300C EF300C/AEC	128,5 x 266 x 89 mm 128,5 x 3 x 89 mm

Powder coating
on request (*)

EF300C/AEC

EF300C	Aluminium cover for EF300L + EF300/550Z - with plastic end caps natural anodizing	0,7 kg	
EF300C/AEC	Aluminium end caps for EF300C natural anodizing	0,15 kg	Customs code 83014019
POWDER COATING	On request (*)		

(*) (all RAL colours available)

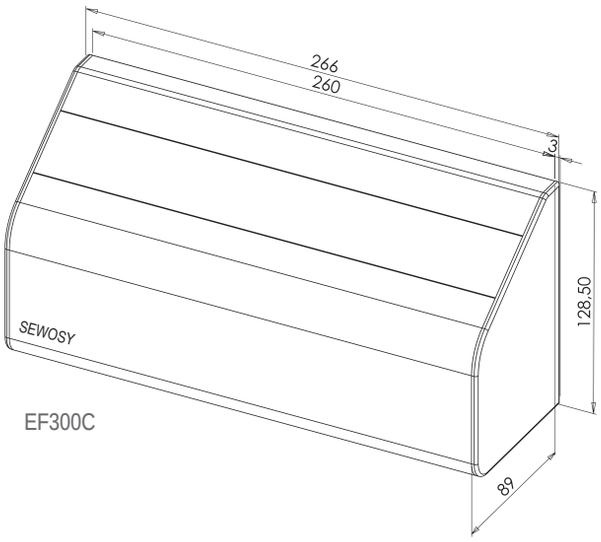

EF300C

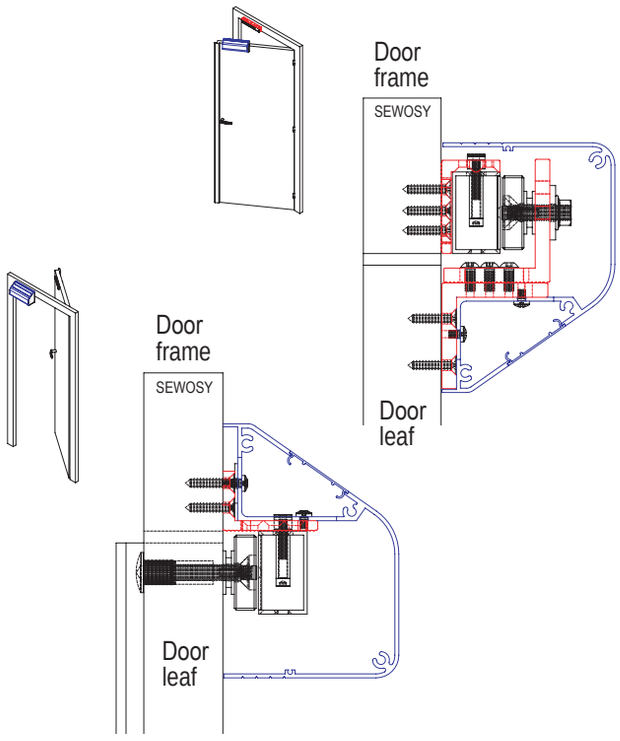

MOUNTING ACCESSORIES

for VELMAG™ surface electromagnetic locks EF300-2

- Mounting on single or double action door
- Aluminium type 6061/T6
- Reinforced resistance by ridges
- High accuracy adjustment
- Z bracket in common with EF300 and EF550 series

EF300L-2

CHARACTERISTICS

Dimensions H x W x D	EF300L-2 EF300/550Z	30,2 x 500 x 48 mm 118 x 185 x 55,5 mm

EF300/550Z

Caution:
Two mounting accessories required for double EM locks

EF300L-2	Adjustable L bracket for EF300-2 range	0,5 kg
EF300/550Z	Adjustable Z bracket for EF300 / EF550 range	0,9 kg

Customs code
83014019

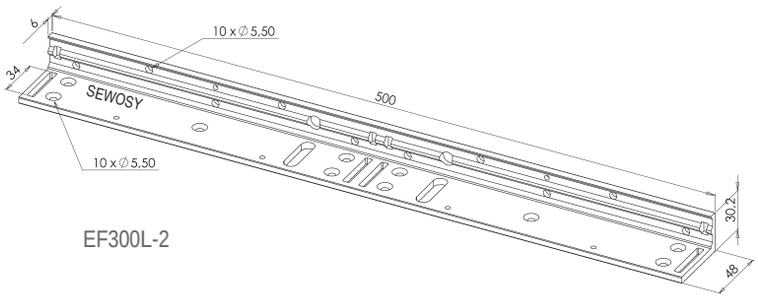

EF300L-2

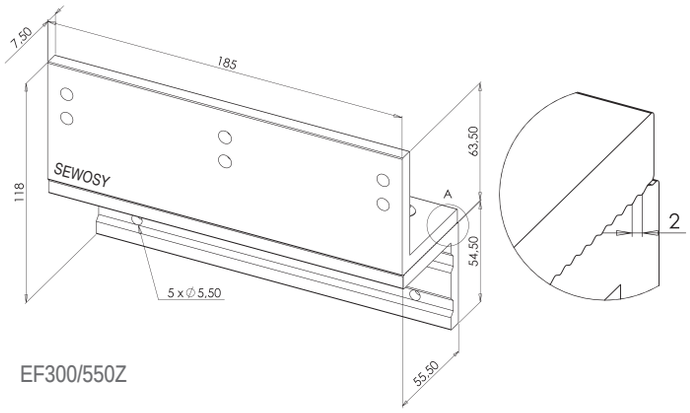

EF300/550Z

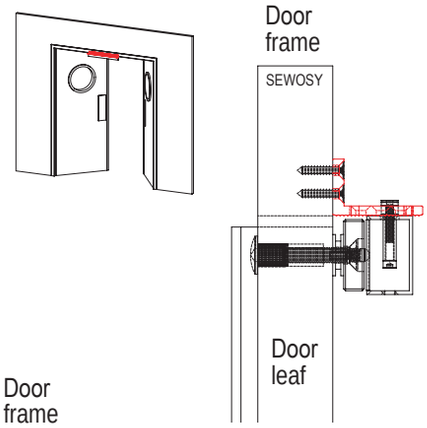

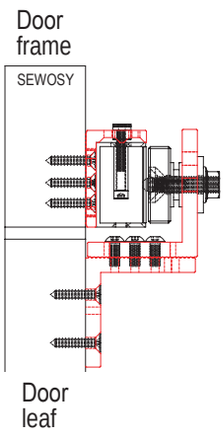

VELMAG™ SURFACE ELECTROMAGNETIC LOCKS
NF S 61-937 COMPLIANT

500 DaN

- Integrated anti-disassemble device
- Satin aluminium housing
- Connection by screw terminal block
- Locked / unlocked status by HALL sensor (CTC model)
- Anti-remanence device by ejector

EF550

NF S 61 937 **PV N°** 13/2264/RG1 - LCPP

MPA **N°** P-120001624.15

CHARACTERISTICS

Dimensions H x W x D		Electromagnet Armature plate	76 x 266 x 40,50 mm 61 x 185 x 16,5 mm - M8
V DC	12-24V DC	ImA DC	480-240 mA
°C	-10°C +55°C	IP	42
V/A	24V DC-2 A	DaN	500*

* Maximal theoretical holding forces, for an implementation meeting the optimum laying conditions

EF550	Surface electromagnetic lock 500 DaN 12-24V DC	5 kg	
EF550CTC	Surface electromagnetic lock 500 DaN 12-24V DC contact + LED	5 kg	Customs code 83014019

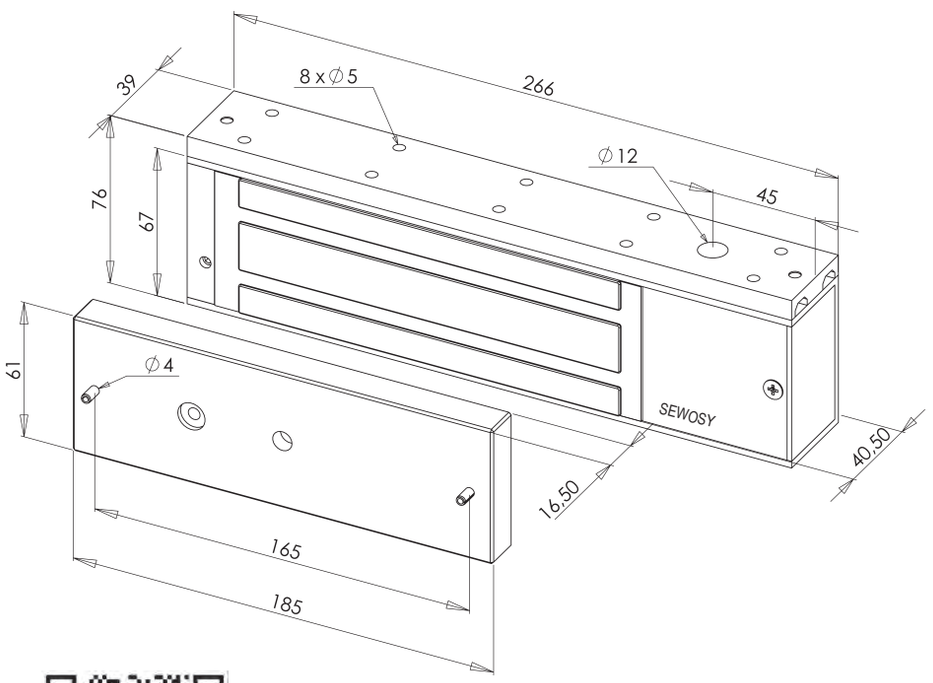

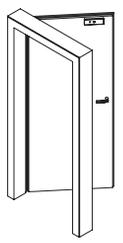

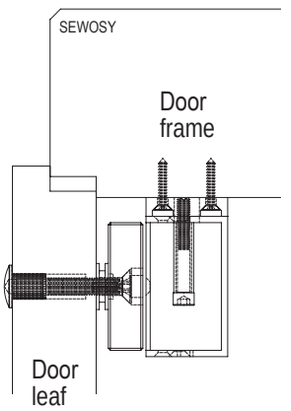

VELMAG™ SURFACE ELECTROMAGNETIC LOCKS - 48V
NF S 61-937 COMPLIANT

500 DaN

- Integrated anti-disassemble device
- Satin aluminium housing
- Connection by screw terminal block
- Locked / unlocked status by HALL sensor (CTC model)
- Anti-remanence device by ejector

EF550/I

NF S 61 937 **PV N°** 11/1539/RG1 - LCPP

CHARACTERISTICS

Dimensions H x W x D		Electromagnet Armature plate	76 x 266 x 40,50 mm 61 x 185 x 16,5 mm - M8
V DC	24-48V DC	ImA DC	270-140 mA
°C	-10°C +55°C	IP	42
V/A	24V DC-2 A	DaN	500*

* Maximal theoretical holding forces, for an implementation meeting the optimum laying conditions

EF550/I	Surface electromagnetic lock 500 DaN 24-48V DC	5 kg	
EF550CTC/I	Surface electromagnetic lock 500 DaN 24-48V DC contact + LED	5 kg	Customs code 83014019

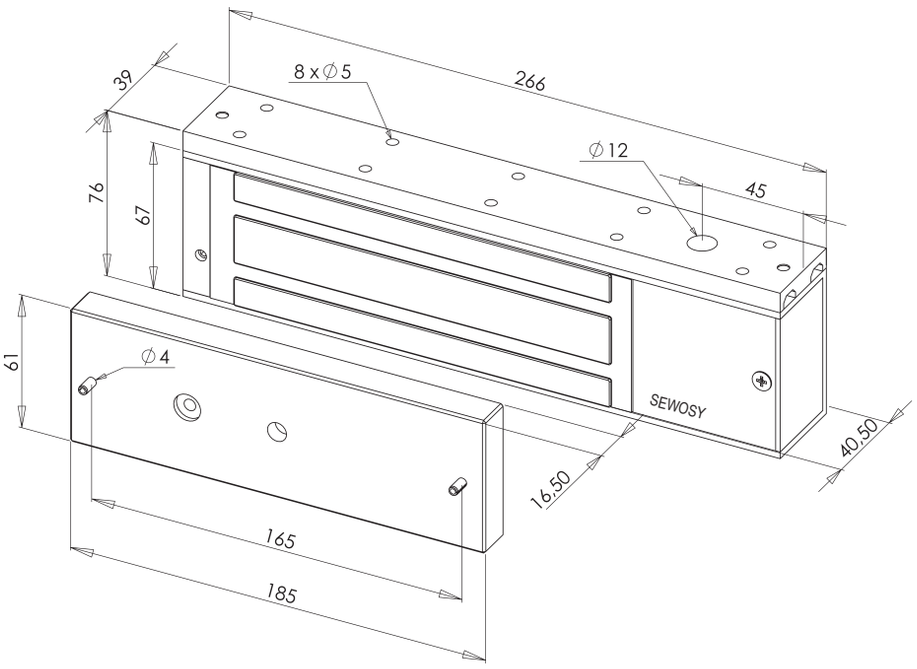

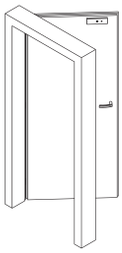

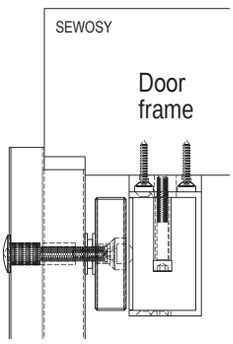

VELMAG™ SURFACE DOUBLE ELECTROMAGNETIC LOCKS NF S 61-937 COMPLIANT

2 x 500 DaN

- Suitable for double leaf doors
- Integrated anti-disassemble device
- Satin aluminium housing
- Connection by screw terminal block
- Locked / unlocked status by HALL sensor (CTC model)
- Anti-remanence device by ejector

EF550-2

CHARACTERISTICS

Dimensions H x W x D	Electromagnet	76 x 532 x 40,50 mm
	Armature plate	61 x 185 x 16,5 mm - M8

V DC	12-24V DC	ImA DC	960-480 mA
°C	-10°C +55°C	IP	42
V/A	24V DC-2 A	DaN	2 x 500*

* Maximal theoretical holding forces, for an implementation meeting the optimum laying conditions

NF S 61 937 **PV N°** 13/2264/RG1 - LCPP

MPA **N°** P-120001624.15

EF550-2	Surface double electromagnetic lock 2 x 500 DaN 12-24V DC	10 kg	
EF550-2CTC	Surface double electromagnetic lock 2 x 500 DaN 12-24V DC contact + LED	10 kg	Customs code 83014019

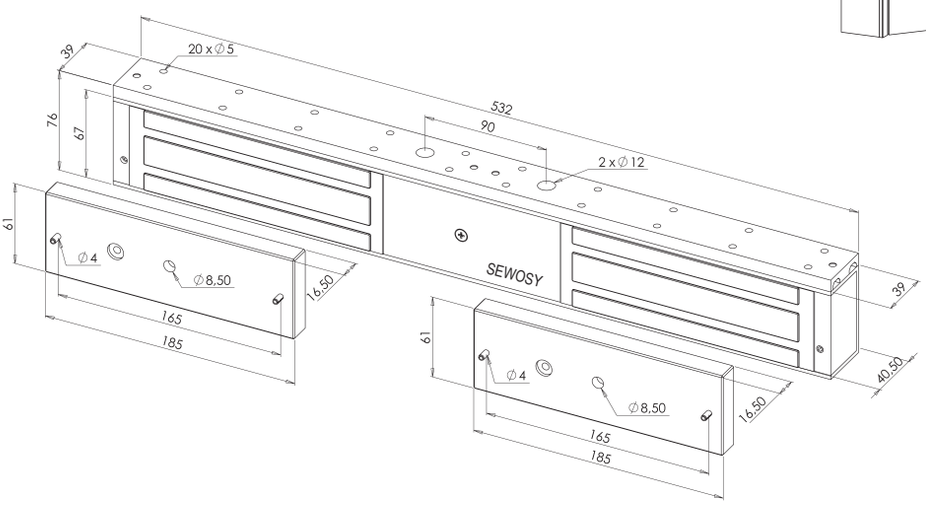

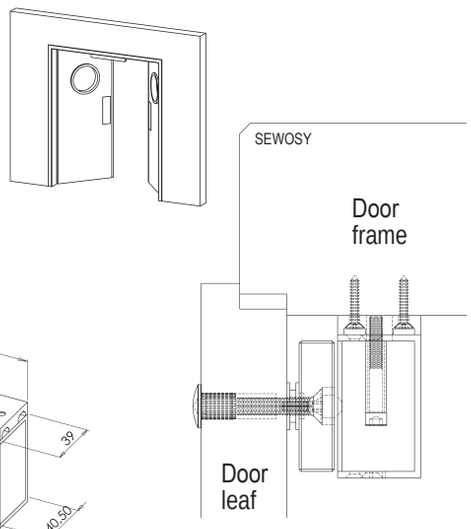

VELMAG™ SURFACE DOUBLE ELECTROMAGNETIC LOCKS - 48V NF S 61-937 COMPLIANT

2 x 500 DaN

- Suitable for double leaf doors
- Integrated anti-disassemble device
- Satin aluminium housing
- Connection by screw terminal block
- Locked / unlocked status by HALL sensor (CTC model)
- Anti-remanence device by ejector

EF550-2/I

CHARACTERISTICS

Dimensions H x W x D		Electromagnet Armature plate	76 x 532 x 40,50 mm 61 x 185 x 16,5 mm - M8
V DC	24-48V DC	ImA DC	540-280 mA
°C	-10°C +55°C	IP	42
V/A	24V DC-2 A	DaN	2 x 500*

* Maximal theoretical holding forces, for an implementation meeting the optimum laying conditions

NF S 61 937 **PV N°** 11/1539/RG1 - LCPP

EF550-2/I	Surface double electromagnetic lock 2 x 500 DaN 24-48V DC	10 kg	
EF550-2CTC/I	Surface double electromagnetic lock 2 x 500 DaN 24-48V DC contact + LED	10 kg	Customs code 83014019

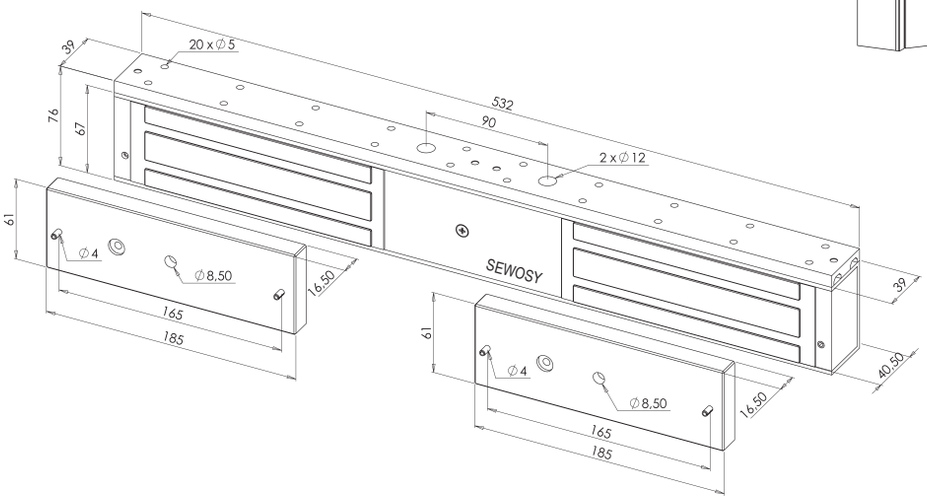

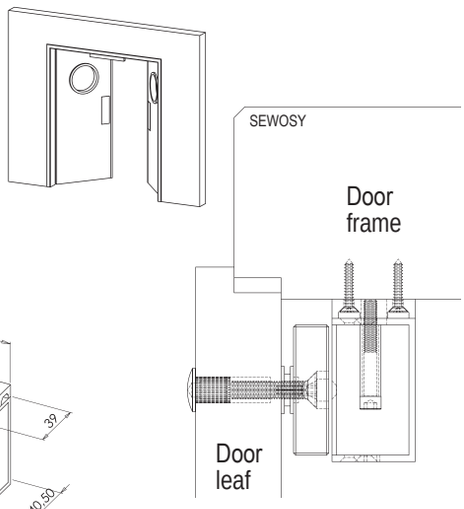

MOUNTING ACCESSORIES

for VELMAG™ surface electromagnetic locks EF550

- Aluminium type 6061/T6
- Reinforced resistance by ridges
- High accuracy adjustment
- Z bracket in common with EF300 and EF550 series
- Z bracket offering fine and definitive fitting

EF550L

EF300/550Z

CHARACTERISTICS

Dimensions H x W x D	EF550L EF300/550Z	45,70 x 266 x 57 mm 118 x 185 x 55,5 mm

EF550L	Adjustable L bracket for EF550 range	0,5 kg
EF300/550Z	Adjustable Z bracket for EF300 / EF550 range	0,9 kg

Customs code
83014019

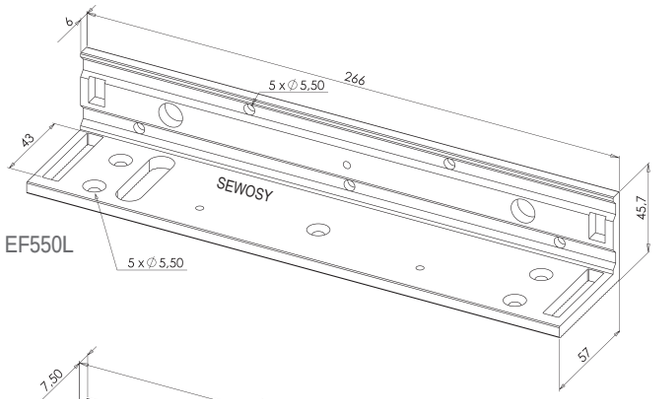

EF550L

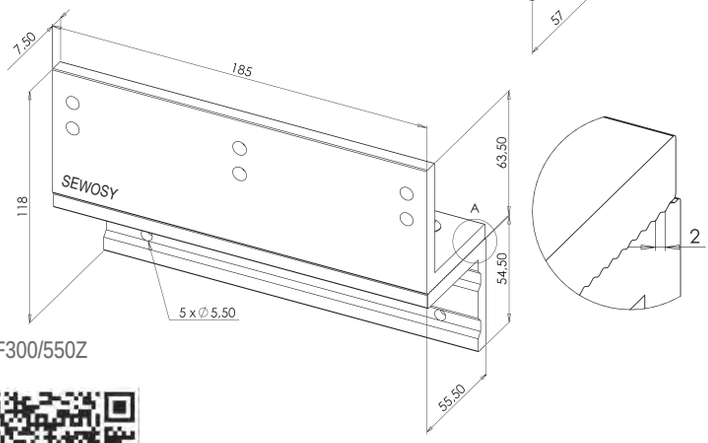

EF300/550Z

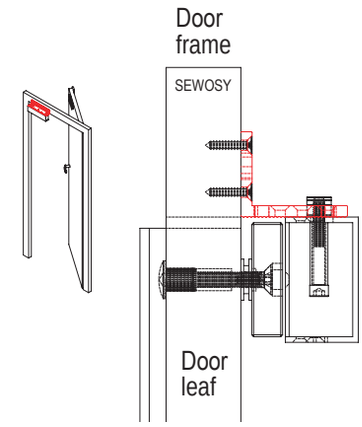

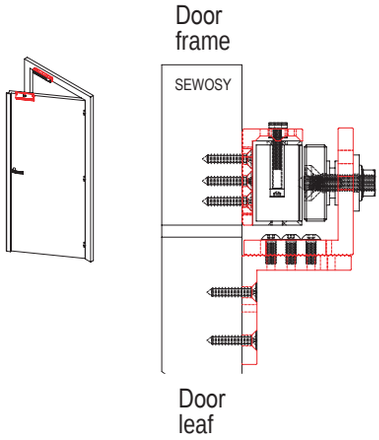

MOUNTING ACCESSORIES

for VELMAG™ surface electromagnetic locks EF550

- Aluminium type 6061/T6
- Without fixings traversing door
- U brackets in common with EF300 and EF550 series

EF550SCP

EF300_550UZAP

EF300_550UL

CHARACTERISTICS

Dimensions H x W x D	EF550SCP EF300_550UZAP EF300_550UL	68 x 192 x 19 mm 64,75 x 185 x 29,5 mm 64,75 x 266 x 29,5 mm

EF550SCP	Mounting set for armature plate EF550 range	0,3 kg	
EF300_550UZAP	U-Mounting sleeve for glass doors in combination with EF300_550Z	0,52 kg	
EF300_550UL	U-Mounting sleeve for glass doors in combination with EF300_550L	0,74 kg	Customs code 83014019

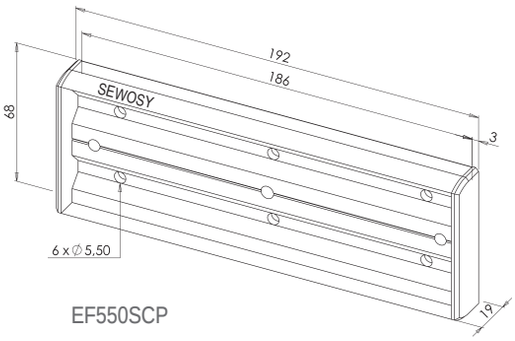

EF550SCP

EF300_550UZAP

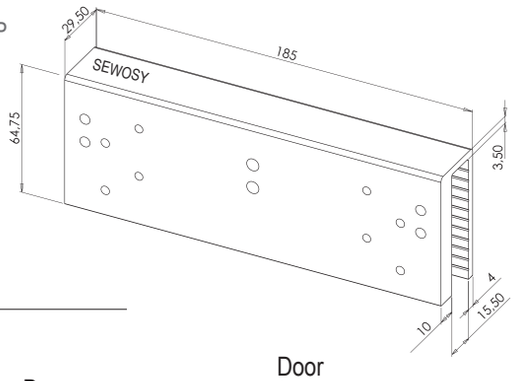

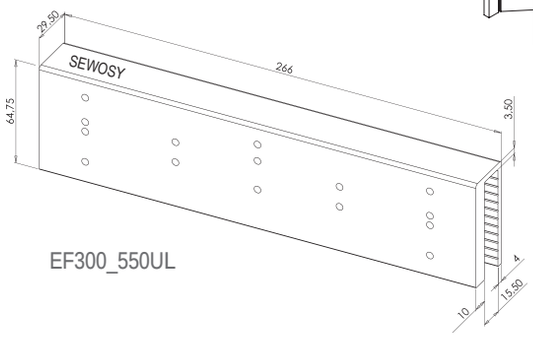

EF300_550UL

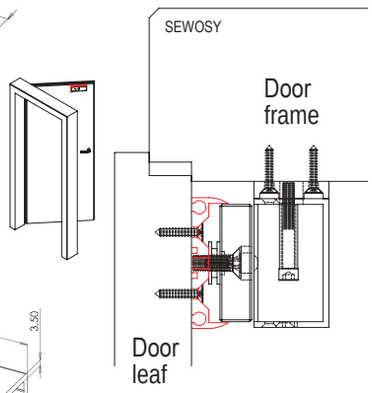

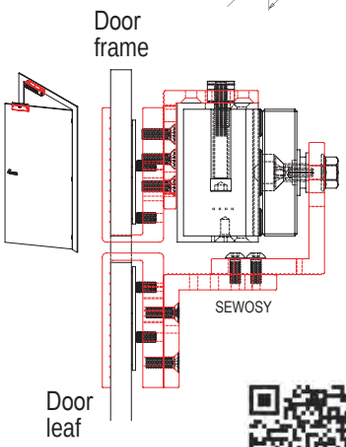

MOUNTING ACCESSORIES

for VELMAG™ surface electromagnetic locks EF550

- Improves aesthetics of installation
- Customizable in all RAL colors
- Mounting on pulling or pushing door
- Aluminium end caps (EF550C/AEC)

EF550C

CHARACTERISTICS

Dimensions H x W x D	EF550C EF550C/AEC	157 x 282 x 102 mm 157 x 3 x 102 mm

Powder coating
on request (*)

EF550C/AEC

EF550C	Aluminium cover for EF550L + EF300/550Z - with plastic end caps natural anodizing	0,9 kg	
EF550C/AEC	Aluminium end caps for EF550C natural anodizing	0,3 kg	Customs code 83014019
POWDER COATING	On request (*)		

(*) (all RAL colours available)

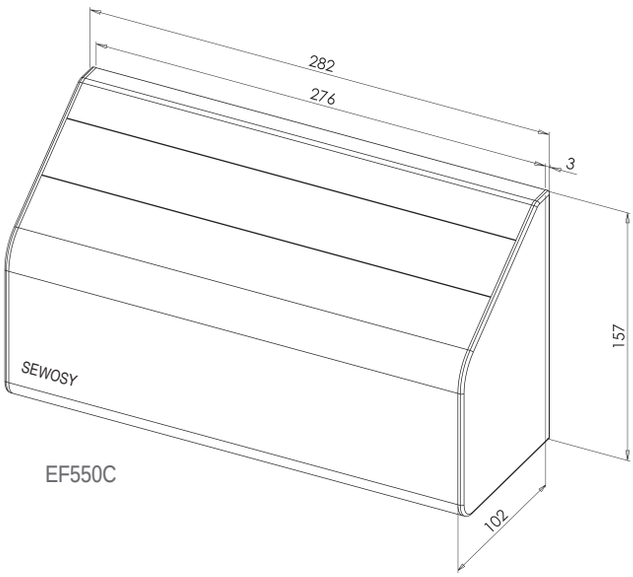

EF550C

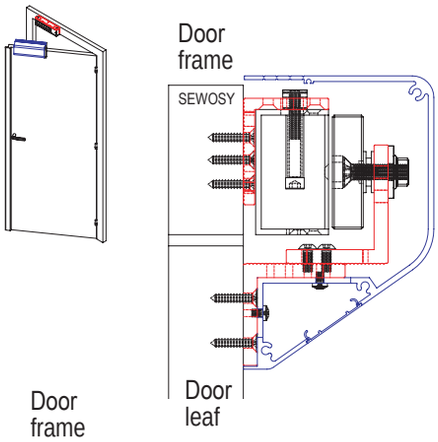

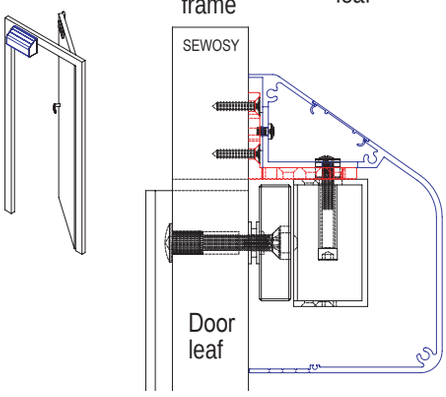

MOUNTING ACCESSORIES

for VELMAG™ surface electromagnetic locks EF550-2

- Mounting on single or double action door
- Aluminium of 6061/T6 type
- Reinforced resistance by ridges
- High accuracy adjustment
- Z bracket in common with EF300 and EF550 series

EF550L-2

CHARACTERISTICS

Dimensions H x W x D	EF550L-2 EF300/550Z	45,70 x 532 x 57 mm 118 x 185 x 55,5 mm

EF300/550Z

Caution:
Two mounting accessories required for double EM locks

EF550L-2	Adjustable L bracket for EF550-2 range	0,8 kg
EF300/550Z	Adjustable Z bracket for EF300 / EF550 range	0,9 kg

Customs code
83014019

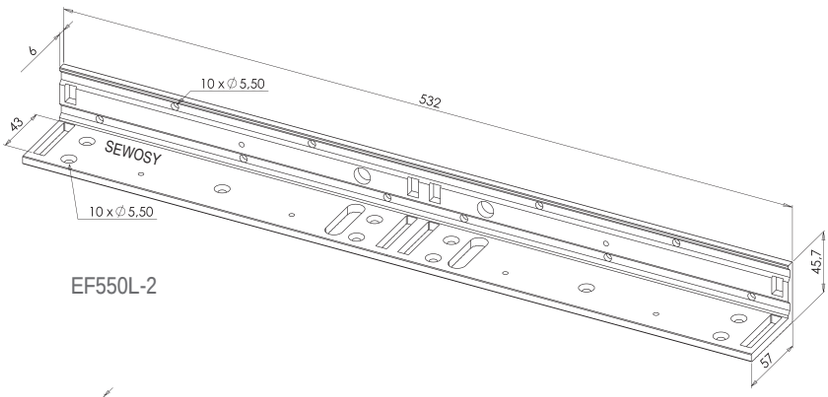

EF550L-2

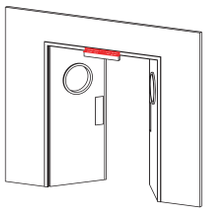

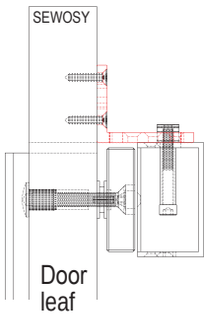

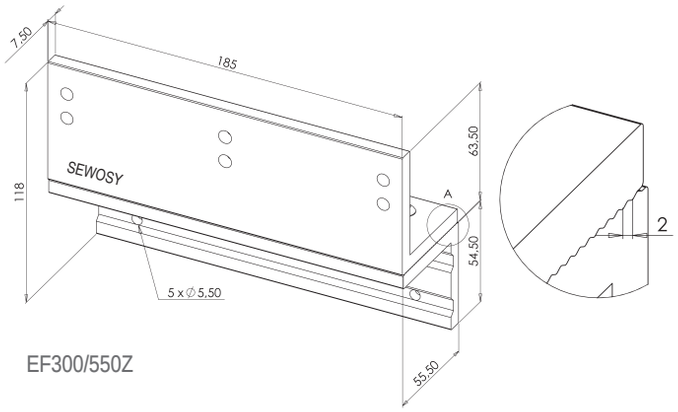

EF300/550Z

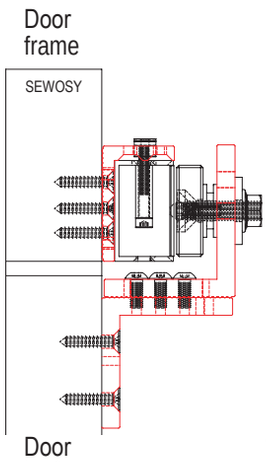

SEWOSY

The surface-mounted electromagnetic locks of EXT series are especially recommended for outside installation, both on doors or gates. The 2 meters cable allows a secured and dry connection. Particularly resistant to corrosion due to their stainless steel body, these electromagnetic locks comply with the protection rating IP67.

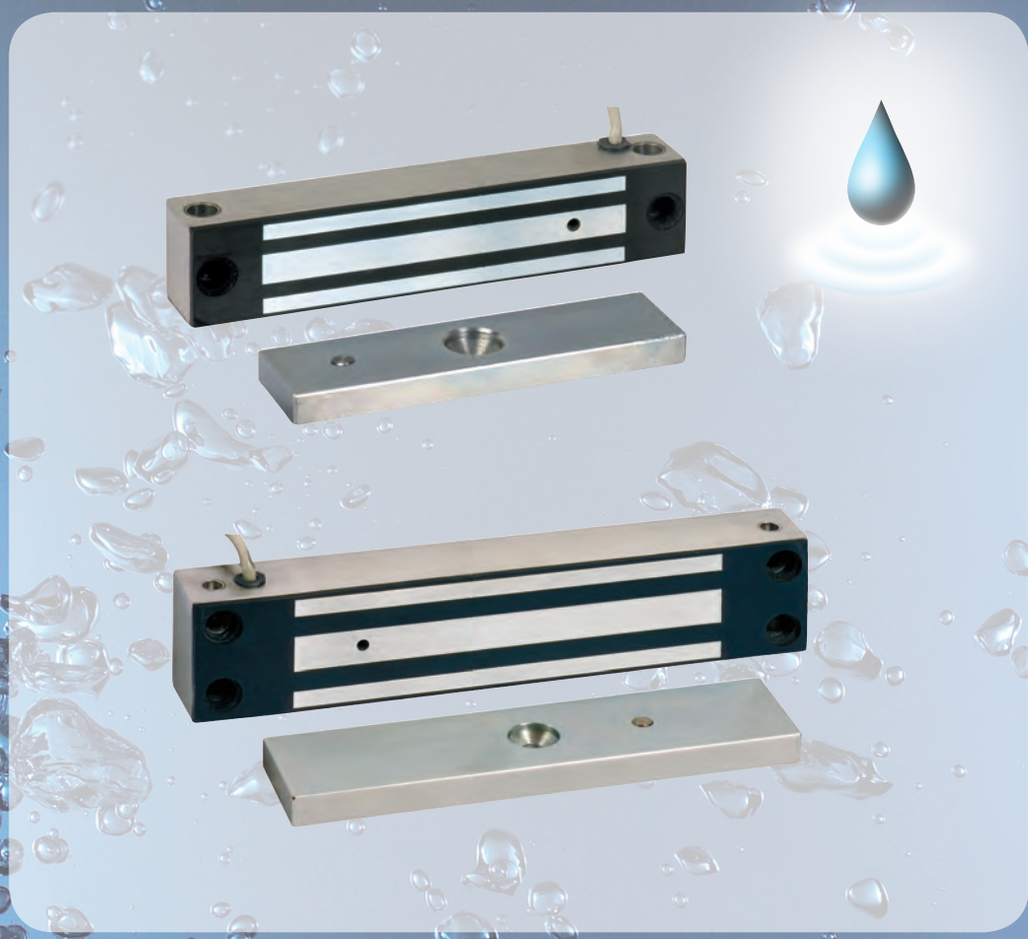

VELMAG™ SURFACE EM LOCKS

STAINLESS STEEL BODY

530 DaN *

370 DaN

180 DaN

- Without residual magnetism
- Easy mounting
- Stainless steel body
- Standard or front mounting

* Maximal theoretical holding forces, for an implementation meeting the optimum laying conditions

VELMAG™ SURFACE EM LOCKS stainless steel body

180 DaN

- Suitable for outdoor mounting IP67
- Electromagnetic lock body made of stainless steel
- Locked / unlocked status sensor by REED contact (CTC model)
- Standard and front mounting (comes with 2 mounting plates)
- Anti-remanence device by ejector

EXT200CTC

CHARACTERISTICS

Dimensions H x W x D		Electromagnet Armature plate	34,5 x 165 x 27,5 mm 33 x 130 x 11 mm
V DC	12-24V DC	ImA DC	500-250 mA
°C	-10°C +55°C	IP	67
V/A	24V DC-1 A	DaN	180*

* Maximal theoretical holding forces, for an implementation meeting the optimum laying conditions

Caution:
Fitting recommended inside locked areas

EXT200CTC	Surface electromagnetic lock stainless steel 180 DaN 12-24V DC outdoor use + contact	1,5 kg	Customs code 83014019

Mounting plate for fixing under crossbar

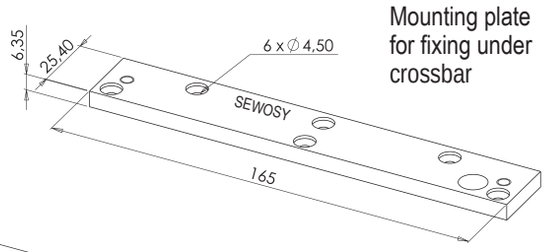

Mounting plate for fixing on pulling door, use with a kit Z

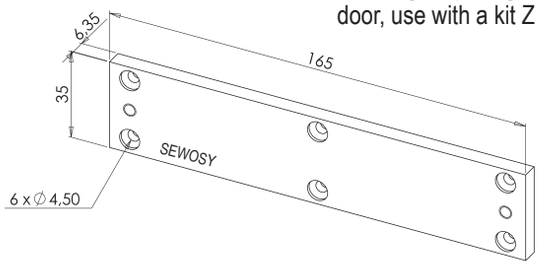

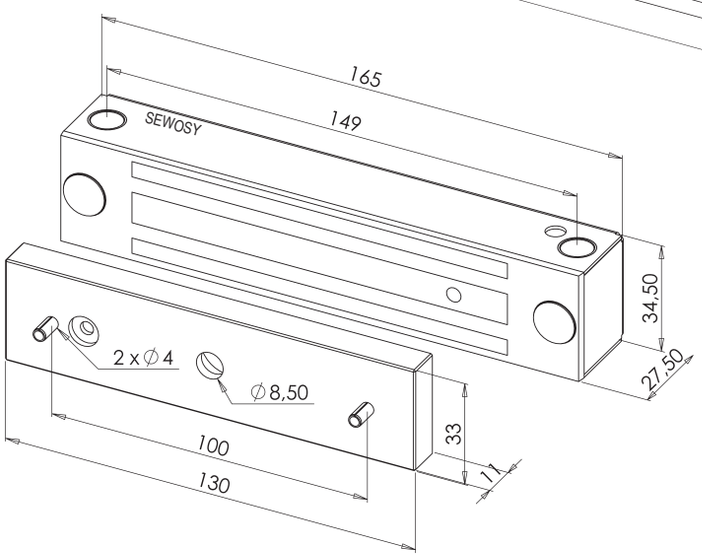

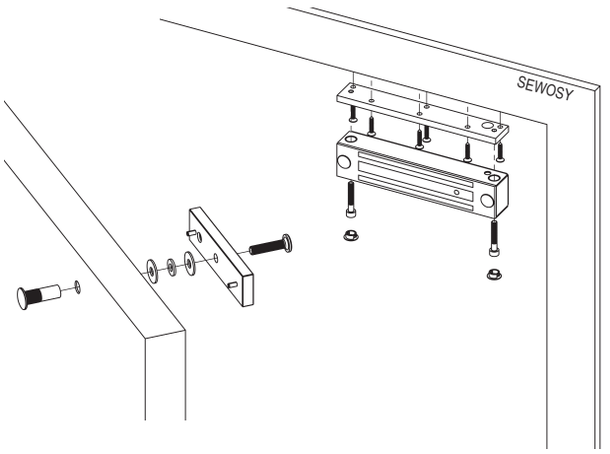

MOUNTING ACCESSORIES

for VELMAG™ EM locks with stainless steel body 180 DaN

- Satin aluminium finishing

EXT200L

CHARACTERISTICS

Dimensions H x W x D	EXT200L EXT200Z	29 x 165 x 38 mm 76 x 140 x 38 mm

EXT200Z

Caution:
Fitting recommended inside locked areas

EXT200L	Adjustable L bracket for EXT200CTC	0,1 kg	
EXT200Z	Adjustable Z bracket for EXT200CTC	0,25 kg	Customs code 83014019

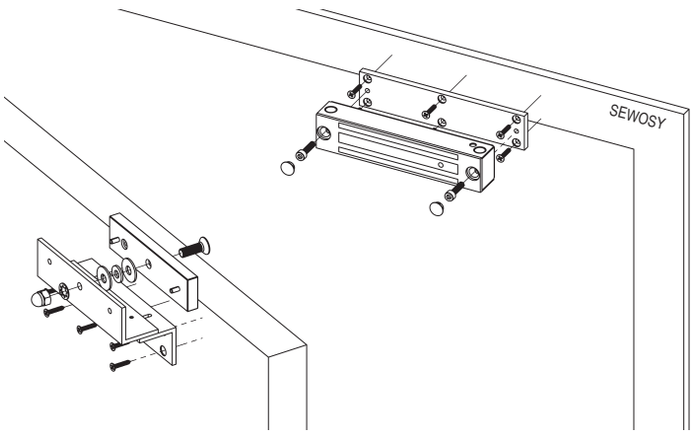

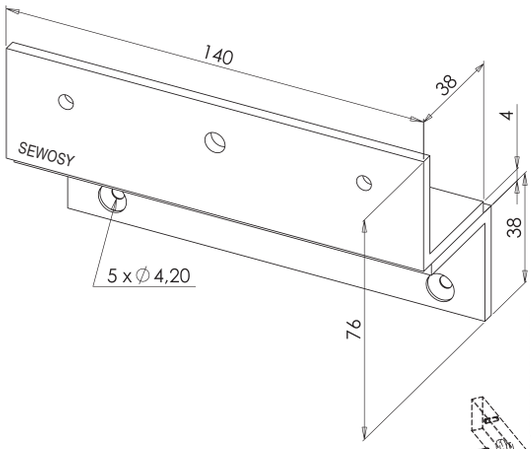

EXT200Z

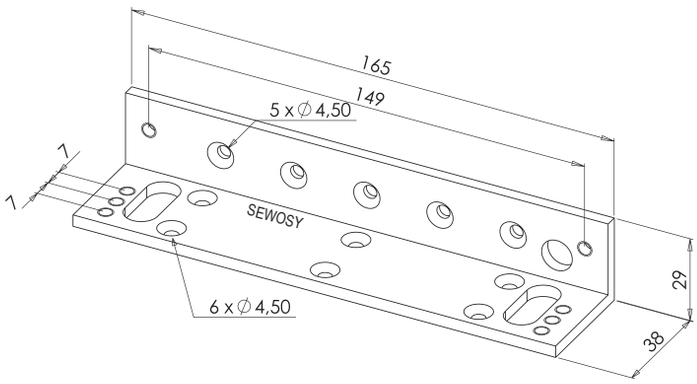

EXT200L

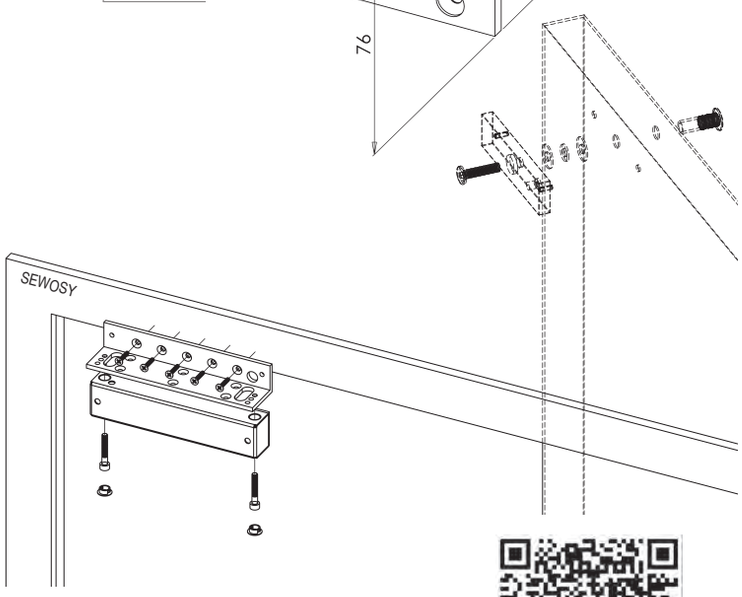

VELMAG™ SURFACE EM LOCKS stainless steel body 180 SERIES

VELMAG™ SURFACE EM LOCKS stainless steel body

370 DaN

- Suitable for outdoor mounting IP67
- Electromagnetic lock body made of stainless steel
- Locked / unlocked status sensor by REED contact (CTC model)
- Standard and front mounting (comes with 2 mounting plates)
- Anti-remanence device by ejector

EXT400CTC

CHARACTERISTICS

Dimensions H x W x D	Electromagnet Armature plate	46 x 220 x 28 mm 44 x 182 x 12 mm	
V DC	12-24V DC	ImA DC	500-250 mA
°C	-10°C +55°C	IP	67
V/A	24V DC-1 A	DaN	370*

* Maximal theoretical holding forces, for an implementation meeting the optimum laying conditions

Caution:
Fitting recommended inside locked areas

EXT400CTC	Surface electromagnetic lock stainless steel 370 DaN 12-24V DC outdoor use + contact	2,7 kg	Customs code 83014019

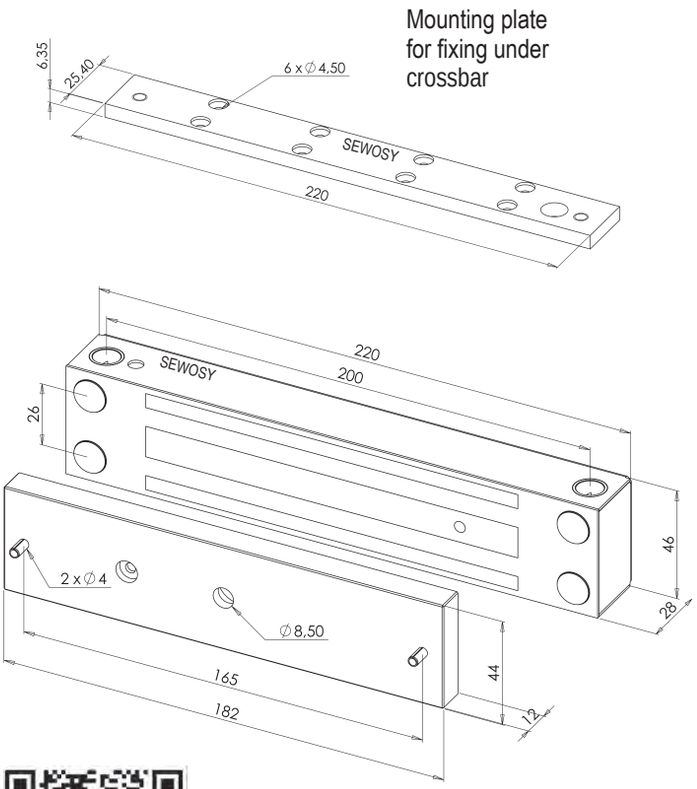

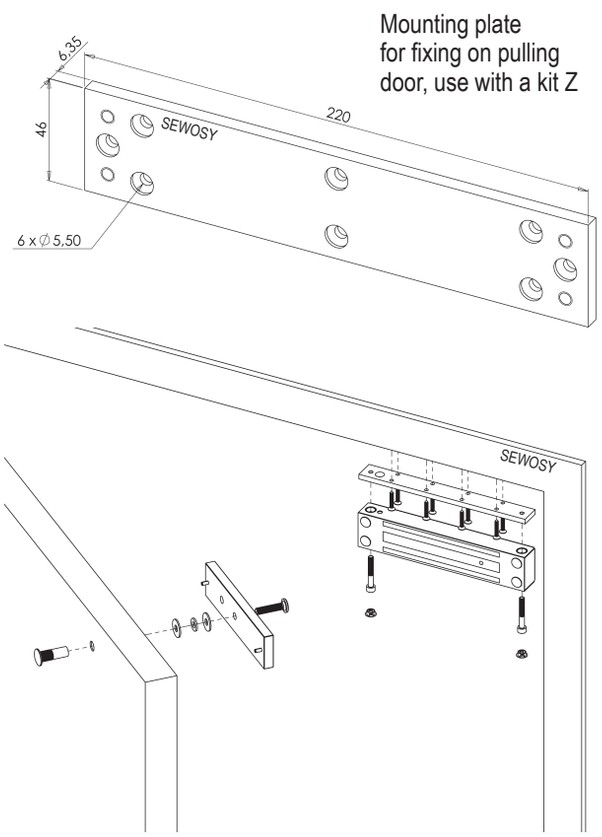

MOUNTING ACCESSORIES

for VELMAG™ EM locks with stainless steel body 370 DaN

- Satin aluminium finishing

EXT400L

CHARACTERISTICS

Dimensions H x W x D	EXT400L EXT400Z	33,5 x 220 x 50,5 mm 101 x 182 x 50,50 mm

EXT400Z

Caution:
Fitting recommended inside locked areas

EXT400L	Adjustable L bracket for EXT400CTC	0,3 kg	
EXT400Z	Adjustable Z bracket for EXT400CTC	0,5 kg	Customs code 83014019

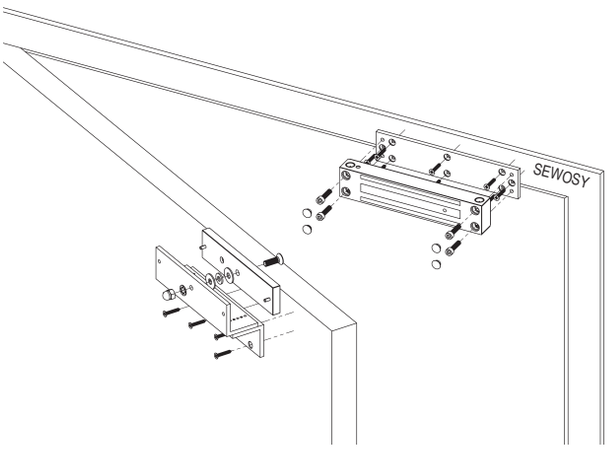

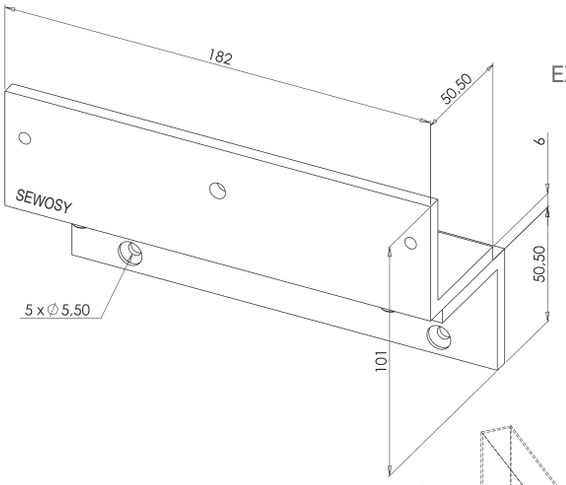

EXT400Z

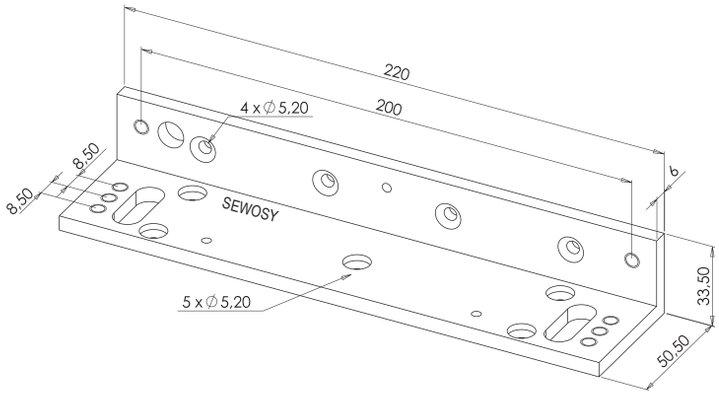

EXT400L

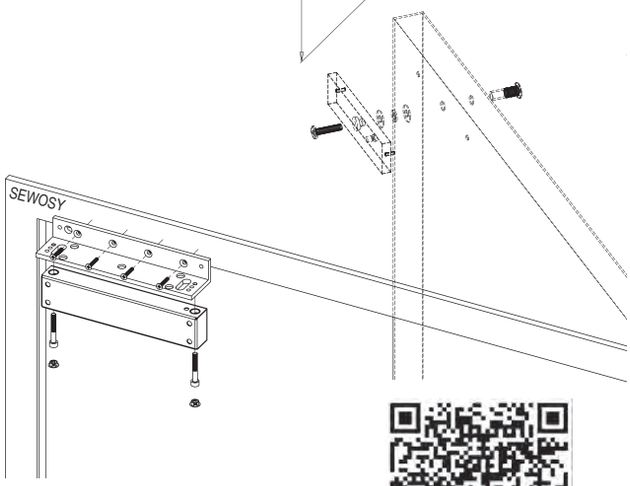

VELMAG™ SURFACE EM LOCKS stainless steel body
NF S 61-937 COMPLIANT

370 DaN

- Comes with connection housing
- Suitable for outdoor mounting IP67
- Electromagnetic lock body made of stainless steel
- Locked / unlocked status sensor by REED contact (CTC model)
- Standard and front mounting (comes with 2 mounting plates)
- Anti-remanence device by ejector

EXT400CTCNF

CHARACTERISTICS

Dimensions H x W x D	Electromagnet Armature plate	46 x 220 x 28 mm 44 x 182 x 12 mm	
V DC	24 VDC	ImA DC	250 mA
°C	-10°C +55°C	IP	67
V/A	–	DaN	370*

* Maximal theoretical holding forces, for an implementation meeting the optimum laying conditions

NF S 61 937 **PV N°** SD 11 00 93 - CNPP

Caution:
Fitting recommended inside locked areas

EXT400CTCNF	Stainless steel surface electromagnetic lock 370 DaN 24V DC with contact NFS 61 937	2,9 kg	Customs code 83014019

Mounting plate for fixing under crossbar

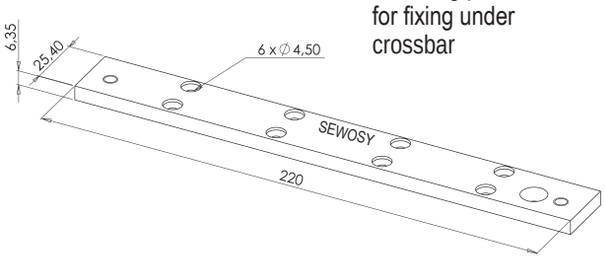

Mounting plate for fixing on pulling door, use with a kit Z

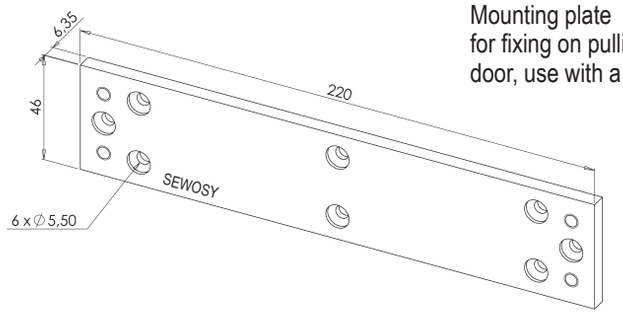

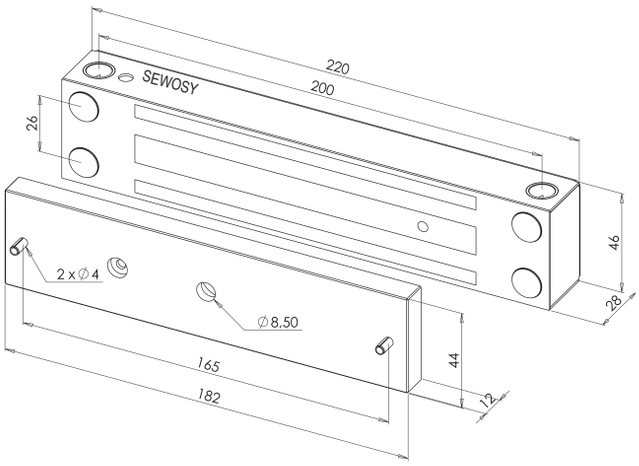

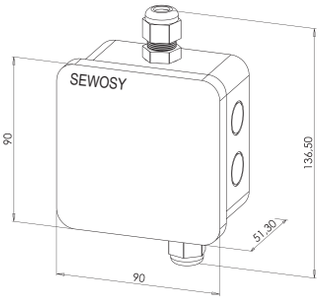

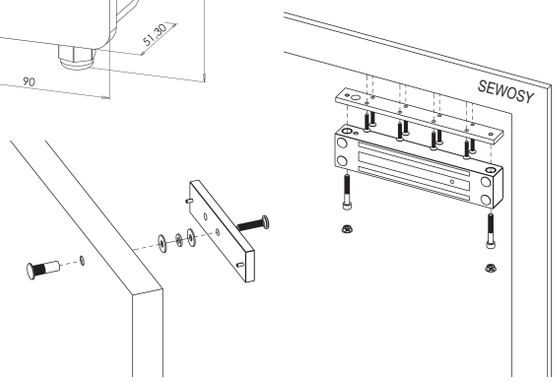

VELMAG™ SURFACE EM LOCKS stainless steel body
NF S 61-937 COMPLIANT - COMPLETE KITS

370 DaN

- Comes with connection housing and installation brackets
- Suitable for outdoor mounting IP68
- Electromagnetic lock body made of stainless steel
- Locked / unlocked status sensor by REED contact (CTC model)
- Standard and front mounting (comes with 2 mounting plates)
- Z bracket offering fine and definitive fitting

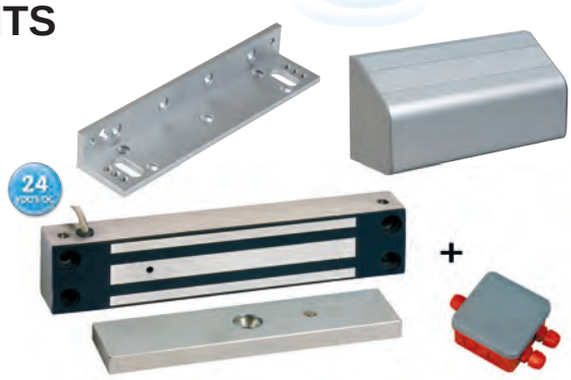

EXT400CTCNFP

CHARACTERISTICS

Dimensions H x W x D	Electromagnet Armature plate	46 x 220 x 28 mm 44 x 182 x 12 mm	
V DC	24 VDC	ImA DC	250 mA
°C	-10°C +55°C	IP	67
V/A	–	DaN	370*

* Maximal theoretical holding forces, for an implementation meeting the optimum laying conditions

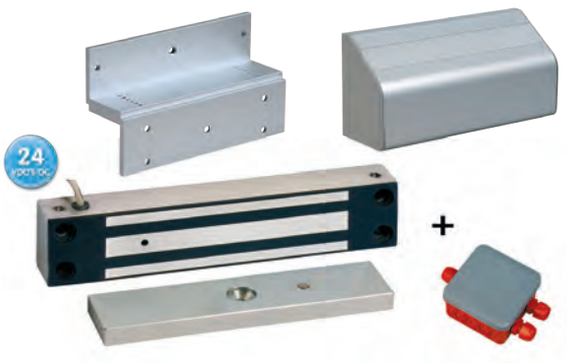

EXT400CTCNFT

EXT400CTCNFP	Stainless steel surface electromagnetic lock 370 DaN 24V DC with contact NFS 61 937 pulling kit	2,9 kg	
EXT400CTCNFT	Stainless steel surface electromagnetic lock 370 DaN 24V DC with contact NFS 61 937 pushing kit	2,9 kg	Customs code 83014019

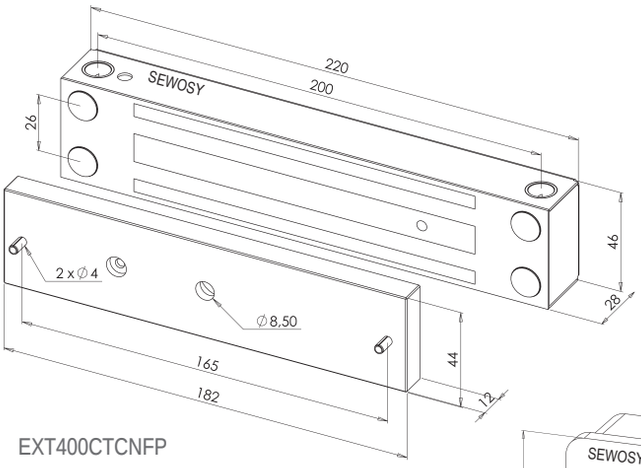

EXT400CTCNFP
EXT400CTCNFT

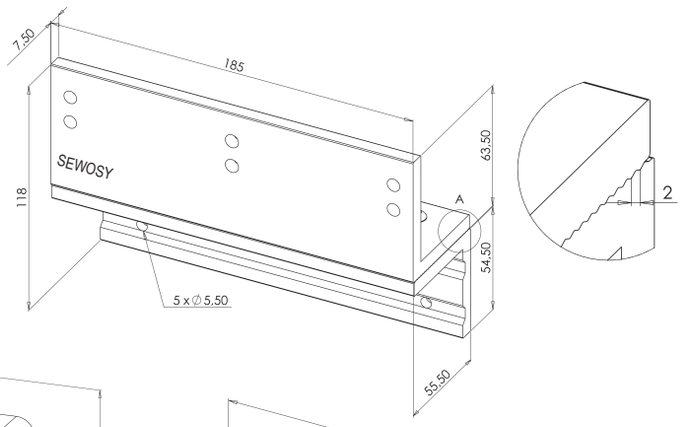

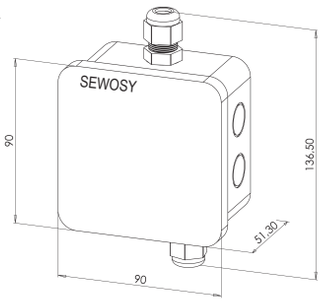

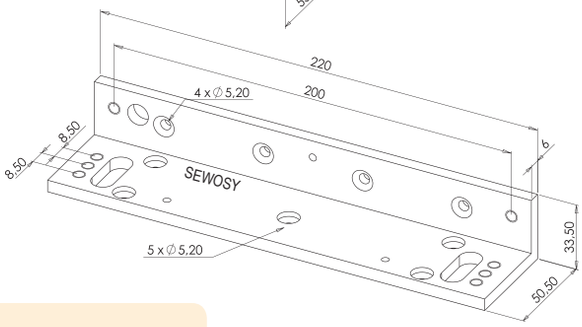

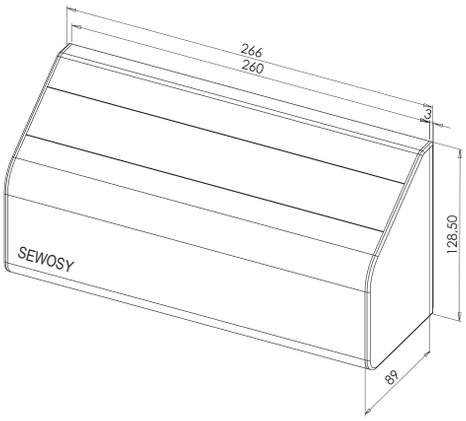

Caution:
Fitting recommended inside locked areas

SEWOSY

VELMAG™ SURFACE EM LOCKS stainless steel body

530 DaN

- Suitable for outdoor mounting IP67
- Electromagnetic lock body made of stainless steel
- Locked / unlocked status sensor by REED contact (CTC model)
- Standard and front mounting (comes with 2 mounting plates)
- Anti-remanence device by ejector

EXT750CTC

CHARACTERISTICS

Dimensions H x W x D		Electromagnet Armature plate	62 x 222 x 42 mm 61 x 185 x 16,5 mm
V DC	12-24V DC	ImA DC	500-250 mA
°C	-10°C +55°C	IP	67
V/A	24V DC-1 A	DaN	530*

* Maximal theoretical holding forces, for an implementation meeting the optimum laying conditions

TÜV N° P-3487/09

Caution:
Fitting recommended inside locked areas

EXT750CTC	Surface electromagnetic lock stainless steel 530 DaN 12-24V DC outdoor use + contact	5,2 kg	Customs code 83014019

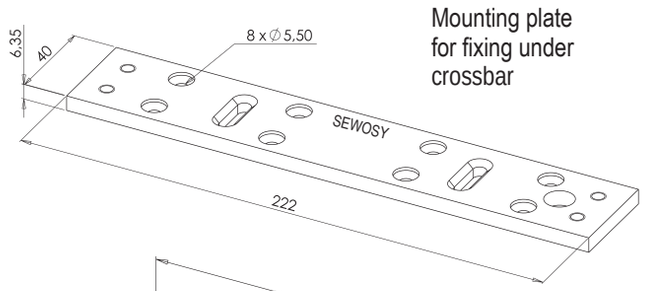

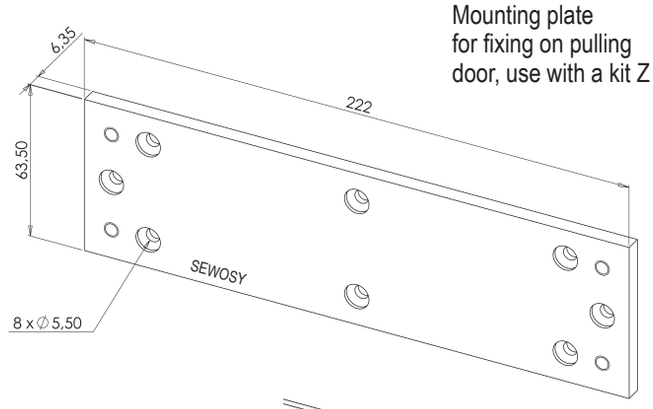

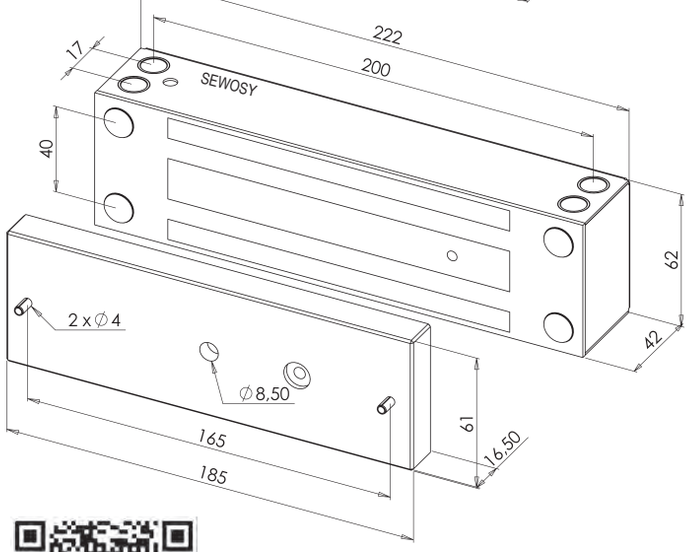

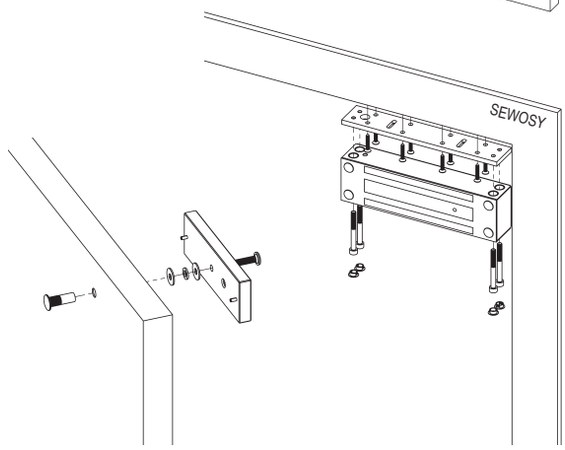

MOUNTING ACCESSORIES

for VELMAG™ EM locks with stainless steel body 530 DaN

- Satin aluminium finishing

EXT750L

EXT750Z

CHARACTERISTICS

Dimensions H x W x D	EXT750L EXT750Z	45,5 x 222 x 63 mm 126 x 182 x 63 mm

Caution:
Fitting recommended inside locked areas

EXT750L	Adjustable L bracket for EXT750CTC	0,4 kg
EXT750Z	Adjustable Z bracket for EXT750CTC	0,8 kg

Customs code
83014019

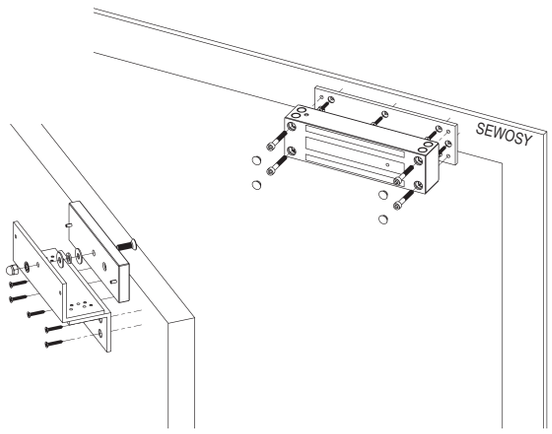

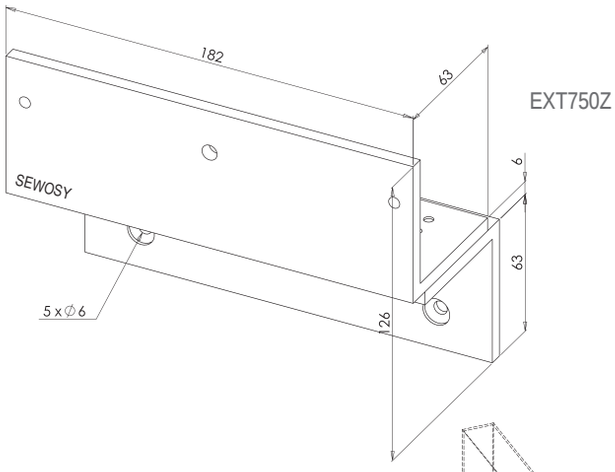

EXT750Z

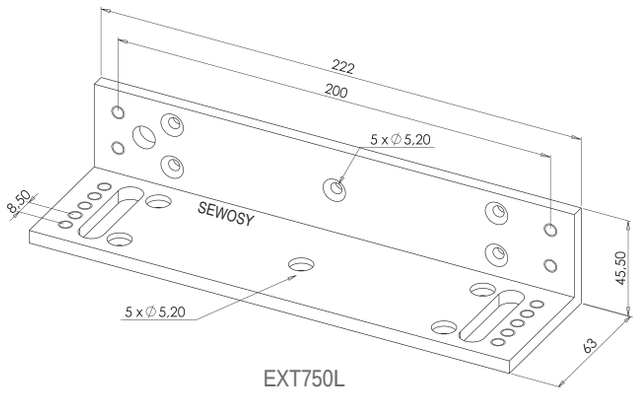

EXT750L

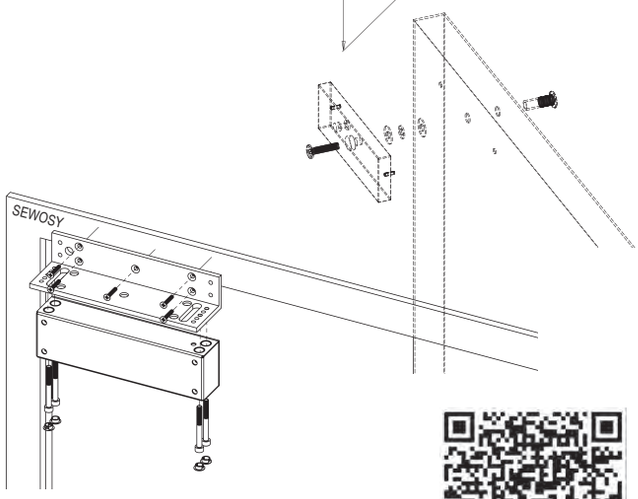

TABLE OF IP CODE

Definition : An IP index allows knowing the sealing of a product to solid and liquid bodies, according to IEC 60529 standard.
The IP index is always made of two figures, the first reflecting sealing against solid bodies, the second, sealing against liquid bodies.

Sealing to solid bodies

code	description
0	Without protection
1	Protection against solid bodies > 50 mm
2	Protection against solid bodies > 12,5 mm
3	Protection against solid bodies > 2,5 mm
4	Protection against solid bodies > 1 mm
5	Protection against dust No damaging deposits
6	Protection against intrusion of dust

Sealing to liquid bodies

code	description
0	Without protection
1	Protection against vertically falling drops of water
2	Protection against falling drops of water up to 15° to the vertical
3	Protection against falling drops of water up to 60° to the vertical
4	Protection against splash water from any direction
5	Protection against low pressure water jets from any direction
6	Protection against high pressure water jets
7	Protection against the effects of immersion between 0,15 and 1 m
8	Protection against the effects of durable immersion under pressure

Example: The IP rate for electromagnetic locks of EXT series is 67 which means:
The electromagnetic lock is protected against intrusion of dust and effects of immersion between 0,15 and 1 m.

CPREG™-1 ELECTROMAGNETIC HANDLES

300 DaN *

2 x 300 DaN

3000 mm

2500 mm

600 mm

400 mm

- Patented
- Adjustable armature plate **in case of door sagging**
- Comes mounted and pre-wired
- **Quick and secure fitting** (without visible screws)
- Aluminium end caps
- Customizable in all RAL colors
- Comply with the NF S 61-937 standard

* Maximal theoretical holding forces, for an implementation meeting the optimum laying conditions

CPREG™-1 ELECTROMAGNETIC HANDLES

3000 mm

PV N° 13/8408/RG1 - LCPP

- Patented
- Adjustable armature plate in case of door sagging
- Come mounted and pre-wired
- Easy, quick and secure fitting (without visible screws)
- Aluminium end caps
- Customizable in all RAL colors

CPREG-1/3000AS

CHARACTERISTICS

Dimensions H x W x D	CPREG-1/3000	3000 x 90 x 65,5 mm	
V DC	12-24V DC	ImA DC	960-480 mA
°C	-10 +60 °C	IP	42
V/A	24V DC-1 A	DaN	2 x 300*

* Maximal theoretical holding forces, for an implementation meeting the optimum laying conditions

CPREG-1/3000AS	Electromagnetic handle CPREG-1 3000 mm 2 x 300 DaN 12-24V DC + contact natural anodizing	15 kg
CPREG-1/3000B	Electromagnetic handle CPREG-1 3000 mm 2 x 300 DaN 12/24V DC + contact mill finish	15 kg

Customs code 83014019

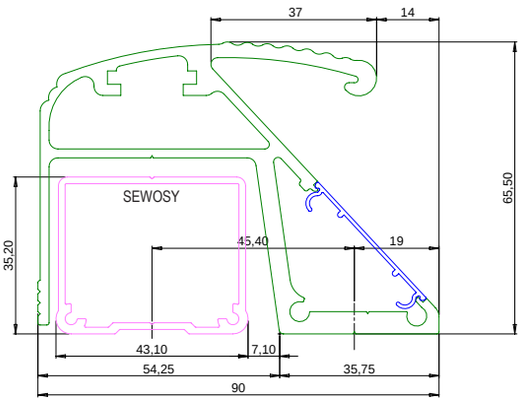

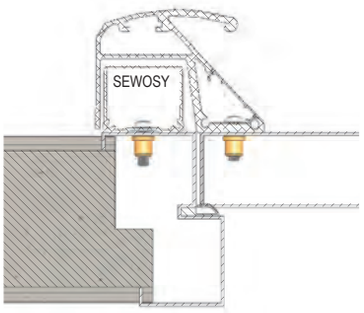

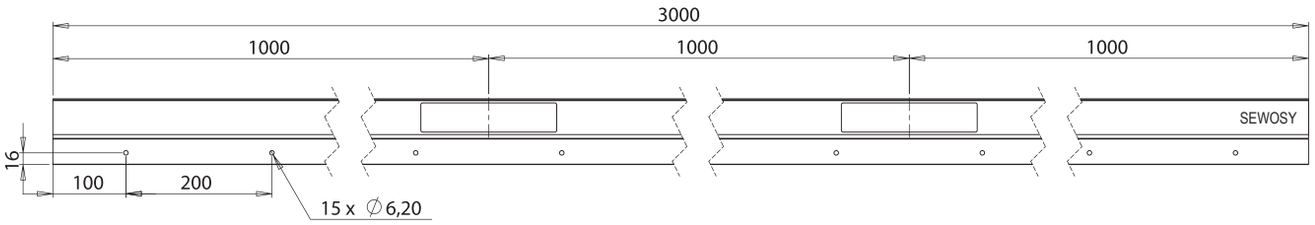

CPREG™-1 ELECTROMAGNETIC HANDLES

reinforcement profiles for CPREG™-1 3000 mm

- Allow fixation through the door
- Integrated handle (CPREG-P)

CPREG-P/3000AS

CPREG-S/3000AS

CHARACTERISTICS

Dimensions H x W x D	CPREG-P/3000	3000 x 72 x 42,6 mm
	CPREG-S/3000	3000 x 40 x 15 mm

CPREG-P/3000AS	Reinforcement profile with handle CPREG-P 3000 mm natural anodizing	6 kg	
CPREG-P/3000B	Reinforcement profile with handle CPREG-P 3000 mm mill finish	6 kg	
CPREG-S/3000AS	Reinforcement profile CPREG-S 3000 mm natural anodizing	3 kg	
CPREG-S/3000B	Reinforcement profile CPREG-S 3000 mm mill finish	3 kg	Customs code 83014019

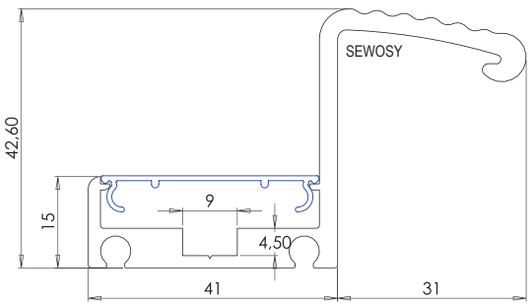

CPREG-P/3000AS

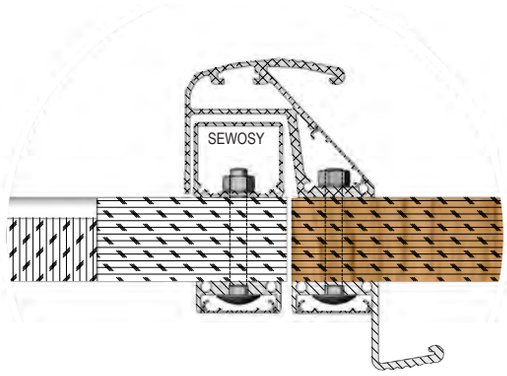

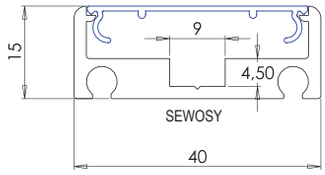

CPREG-S/3000AS

CPREG™-1 ELECTROMAGNETIC HANDLES

2500 mm

PV N° 13/8408/RG1 - LCPP

- Patented
- Adjustable armature plate in case of door sagging
- Come mounted and pre-wired
- Easy, quick and secure fitting (without visible screws)
- Aluminium end caps
- Customizable in all RAL colors

CPREG-1/2500AS

CHARACTERISTICS

Dimensions H x W x D	CPREG-1/2500	2500 x 90 x 65,5 mm	
V DC	12-24V DC	ImA DC	960-480 mA
°C	-10 +60 °C	IP	42
V/A	24V DC-1 A	DaN	2 x 300*

* Maximal theoretical holding forces, for an implementation meeting the optimum laying conditions

CPREG-1/2500AS	Electromagnetic handle CPREG-1 2500 mm 2 x 300 DaN 12-24V DC + contact natural anodizing	13 kg
CPREG-1/2500B	Electromagnetic handle CPREG-1 2500 mm 2 x 300 DaN 12/24V DC + contact mill finish	13 kg

Customs code 83014019

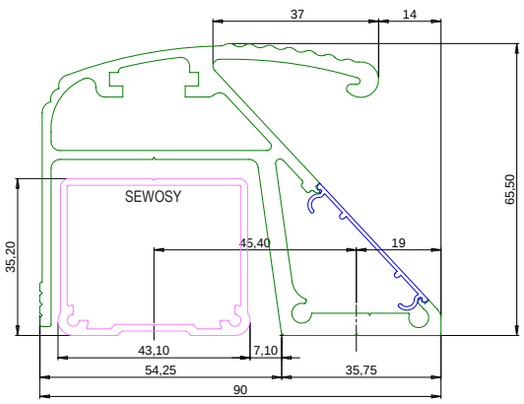

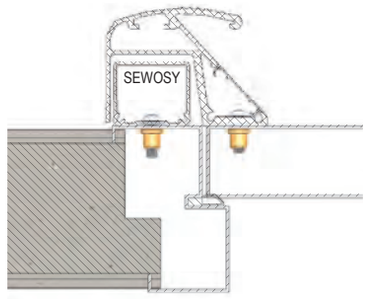

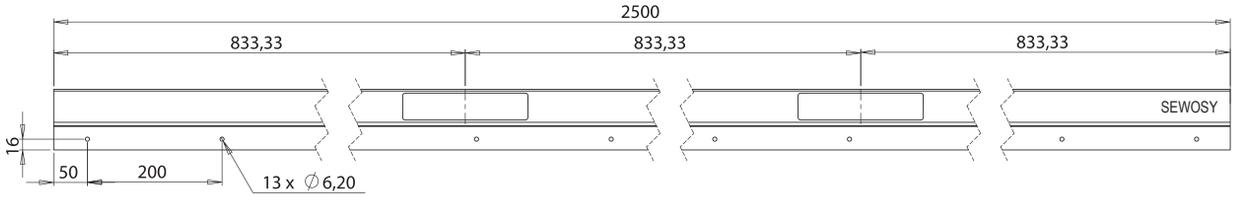

CPREG™-1 ELECTROMAGNETIC HANDLES

reinforcement profiles for CPREG™-1 2500 mm

- Allow fixation through the door
- Integrated handle (CPREG-P)

CPREG-P/2500AS

CPREG-S/2500AS

CHARACTERISTICS

Dimensions H x W x D	CPREG-P/2500	2500 x 72 x 42,6 mm
	CPREG-S/2500	2500 x 40 x 15 mm

CPREG-P/2500AS	Reinforcement profile with handle CPREG-P 2500 mm natural anodizing	5 kg	
CPREG-P/2500B	Reinforcement profile with handle CPREG-P 2500 mm mill finish	5 kg	
CPREG-S/2500AS	Reinforcement profile CPREG-S 2500 mm natural anodizing	2,5 kg	
CPREG-S/2500B	Reinforcement profile CPREG-S 2500 mm mill finish	2,2 kg	Customs code 83014019

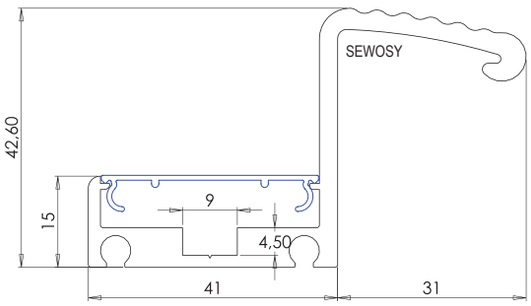

CPREG-P/2500AS

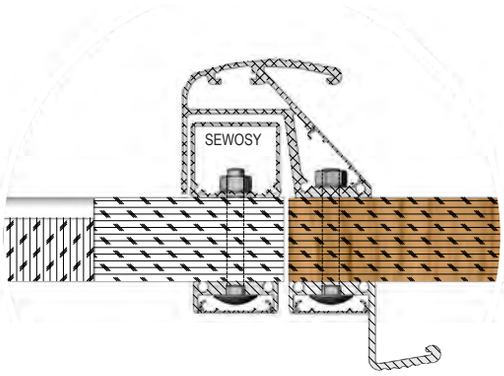

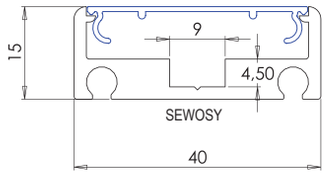

CPREG-S/2500AS

CPREG™-1 ELECTROMAGNETIC HANDLES

600 mm

PV N° 13/8408/RG1 - LCPP

- Patented
- Adjustable armature plate in case of door sagging
- Come mounted and pre-wired
- Easy, quick and secure fitting (without visible screws)
- Aluminium end caps
- Customizable in all RAL colors

CPREG-1/600AS

CHARACTERISTICS

Dimensions H x W x D	CPREG-1/600	600 x 90 x 65,5 mm	
V DC	12-24V DC	ImA DC	960-480 mA
°C	-10 +60 °C	IP	42
V/A	24V DC-1 A	DaN	2 x 300*

* Maximal theoretical holding forces, for an implementation meeting the optimum laying conditions

CPREG-1/600AS	Electromagnetic handle CPREG-1 600 mm 2 x 300 DaN 12-24V DC + contact natural anodizing	6 kg	
CPREG-1/600B	Electromagnetic handle CPREG-1 600 mm 2 x 300 DaN 12/24V DC + contact mill finish	6 kg	Customs code 83014019

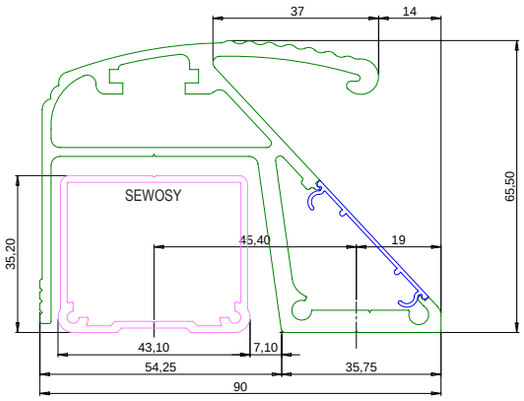

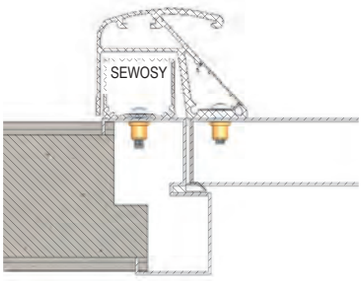

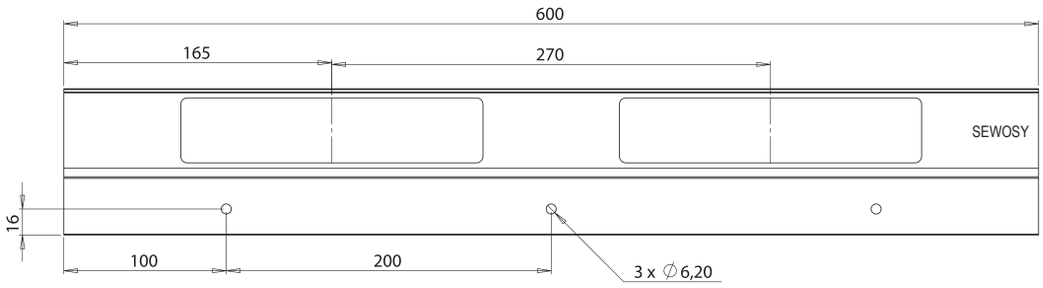

CPREG™-1 ELECTROMAGNETIC HANDLES

reinforcement profiles for CPREG™-1 600 mm

- Allow fixation through the door
- Integrated handle (CPREG-P)

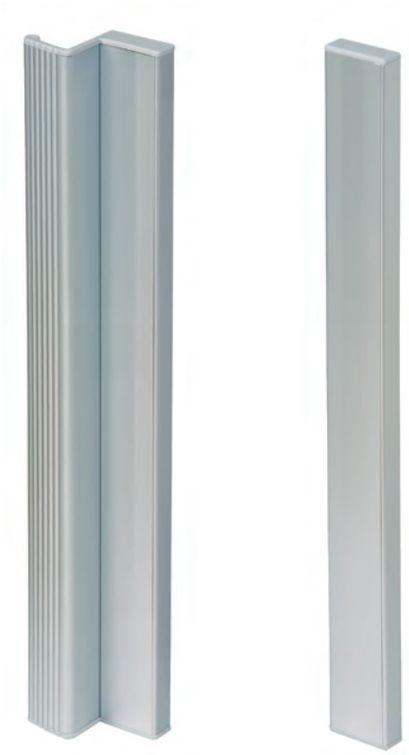

CPREG-P/600AS CPREG-S/600AS

CHARACTERISTICS

Dimensions H x W x D	CPREG-P/600	600 x 72 x 42,6 mm
	CPREG-S/600	600 x 40 x 15 mm

CPREG-P/600AS	Reinforcement profile with handle CPREG-P 600 mm natural anodizing	1 kg	
CPREG-P/600B	Reinforcement profile with handle CPREG-P 600 mm mill finish	1 kg	
CPREG-S/600AS	Reinforcement profile CPREG-S 600 mm natural anodizing	0,6 kg	
CPREG-S/600B	Reinforcement profile CPREG-S 600 mm mill finish	0,6 kg	Customs code 83014019

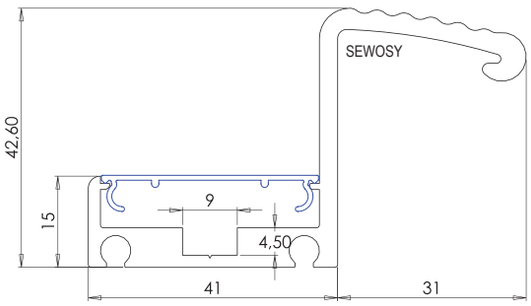

CPREG-P/600AS

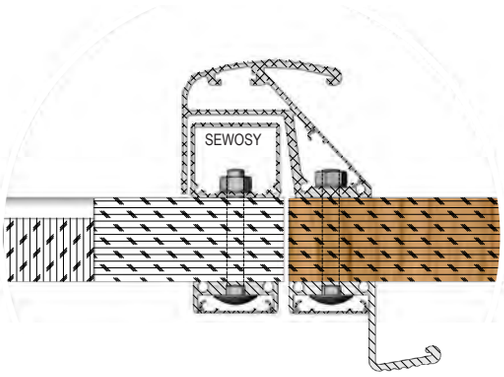

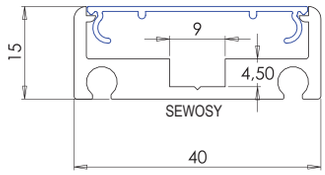

CPREG-S/600AS

CPREG™-1 ELECTROMAGNETIC HANDLES

400 mm

PV N° 13/8408/RG1 - LCPP

- Patented
- Adjustable armature plate in case of door sagging
- Come mounted and pre-wired
- Easy, quick and secure fitting (without visible screws)
- Aluminium end caps
- Customizable in all RAL colors

CPREG-1/400AS

CHARACTERISTICS

Dimensions H x W x D	CPREG-1/400	400 x 90 x 65,5 mm	
V DC	12-24V DC	ImA DC	480-240 mA
°C	-10 +60 °C	IP	42
V/A	24V DC-1 A	DaN	300*

* Maximal theoretical holding forces, for an implementation meeting the optimum laying conditions

CPREG-1/400AS	Electromagnetic handle CPREG-1 400 mm 300 DaN 12-24V DC + contact natural anodizing	3 kg	
CPREG-1/400B	Electromagnetic handle CPREG-1 400 mm 300 DaN 12/24V DC + contact mill finish	3 kg	Customs code 83014019

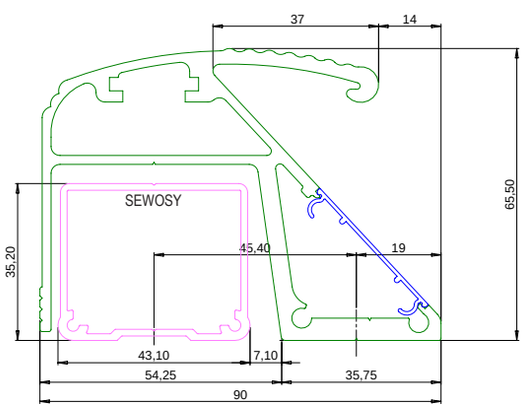

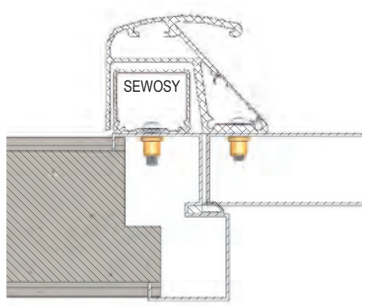

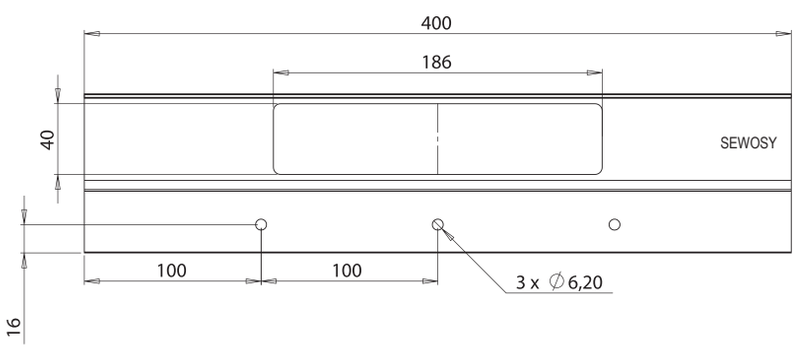

CPREG™-1 ELECTROMAGNETIC HANDLES

reinforcement profiles for CPREG™-1 400 mm

- Allow fixation through the door
- Integrated handle (CPREG-P)

CPREG-P/400AS

CPREG-S/400AS

CHARACTERISTICS

Dimensions H x W x D	CPREG-P/400	400 x 72 x 42,6 mm
	CPREG-S/400	400 x 40 x 15 mm

CPREG-P/400AS	Reinforcement profile with handle CPREG-P 400 mm natural anodizing	0,7 kg	
CPREG-P/400B	Reinforcement profile with handle CPREG-P 400 mm mill finish	0,7 kg	
CPREG-S/400AS	Reinforcement profile CPREG-S 400 mm natural anodizing	0,4 kg	
CPREG-S/400B	Reinforcement profile CPREG-S 400 mm mill finish	0,4 kg	Customs code 83014019

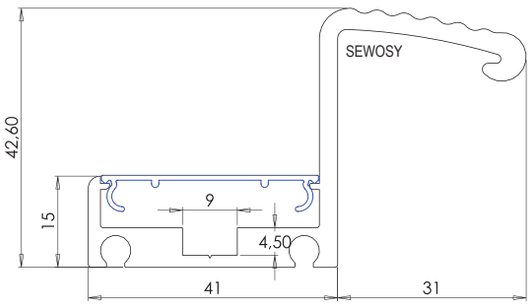

CPREG-P/400AS

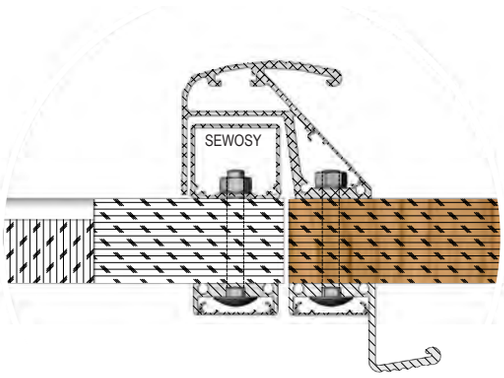

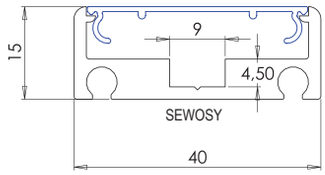

CPREG-S/400AS

CPREG™-1 ELECTROMAGNETIC HANDLES

services

- Made-to-measure
- All RAL colors available (see SEWOSY color chart)
- Fast execution

Powder coating:
On request (*)

POWDER COATING	On request (*) all RAL colors available
NUANCIER	RAL color chart
ANODIZING	On request
CPREG-1/CUT	Cut for CPREG-1
CPREG-1/RES	Supplementary reservation electromagnetic lock and armature plate for CPREG-1
KITCPREG12-V	Supplementary electromagnetic lock kit for CPREG-1 and CPREG-2 12/24VDC

Customs code
83014019

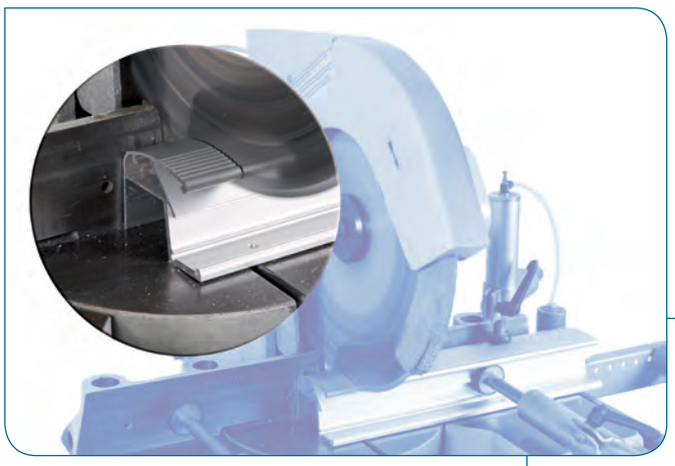

CPREG-1/CUT

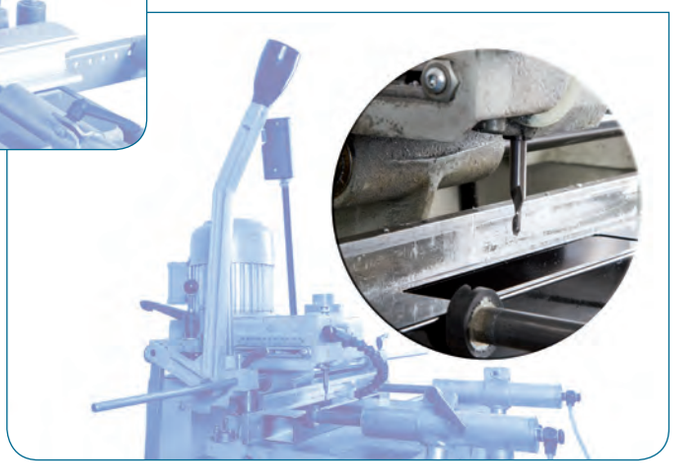

CPREG-1/RES

ENJOY SHORT DELIVERY DELAYS ON RAL POWDER COATING AND ON MADE-TO-MEASURE CUTTING

► For a maximum of 40 CPREG™ EM handles per order, the average completion deadlines of RAL powder coating are **7 working days only.**

For larger quantities or in case of specific RAL, contact us.

► Average time for cuts:

- up to 5 cuts per order: 3 working days
- from 6 to 10 cuts per order: 5 working days
- more than 10 cuts per order: 7 working days

with SEWOSY, cutting and powder coating of your CPREG™ electromagnetic handles...

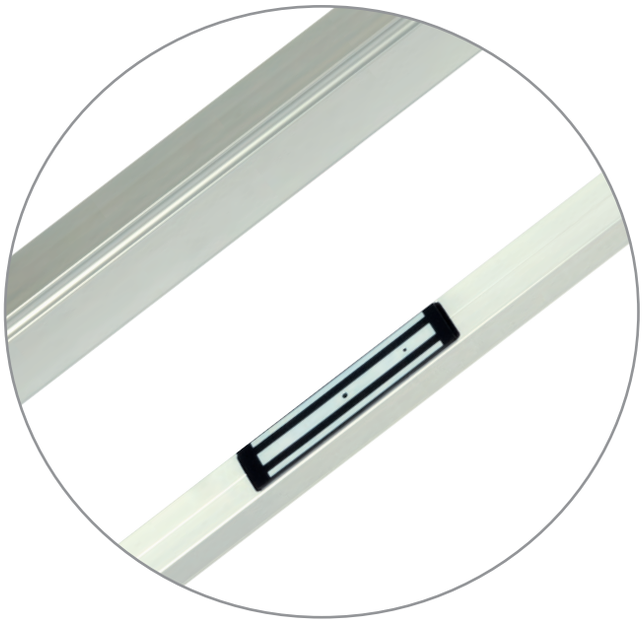

... is FAST

and VERY WELL DONE !

FOCUS ON THE CPREG™-2 ELECTROMAGNETIC HANDLE

Why a 2200 mm length for the CPREG™-2?

As the firstborn of the electromagnetic handles CPREG™, the CPREG™-2 is available in different lengths: 3000 mm, 2500 mm, 600 mm and 400 mm. And also, which is unheard, in 2200 mm! SEWOSY tells you more…

The genesis of the story is that many of our customers have expressed significant demand for a length close to the height of most doors, ranging between 2100 and 2200 mm! We dug the issue, and evaluated the benefits of a new length of 2200 mm:

- The electromagnetic handle causes less falls and is lighter, which is – modestly but surely – more environmentally friendly!
- Transport and material handling are easier.

Duly noted: the CPREG™-2 was immediately manufactured in this length which suits most doors. Hence if your installs don't require more than 2200 mm, think of the new length of the CPREG™-2 electromagnetic handle!

Optional patented extension

For strengthening the fitting of its new electromagnetic handle on some doorframes, SEWOSY designed a laying extension.

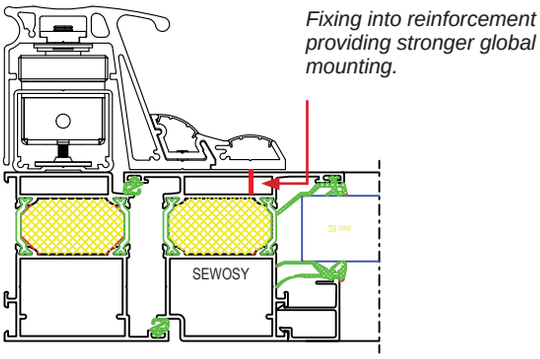

WITH EXTENSION *

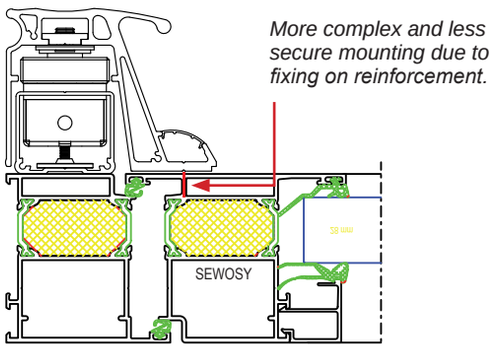

WITHOUT EXTENSION *

The mounting of the CPREG™-2 electromagnetic handle can be enhanced depending on the types of door when it is accompanied with its dedicated extension, the CPREG-E. This extension allows to offset the fixing points.

* Particular case depending on door type

CPREG™-2 ELECTROMAGNETIC HANDLES

300 DaN *

2 x 300 DaN

3000 mm

2500 mm

2200 mm

600 mm

400 mm

* Maximal theoretical holding forces, for an implementation meeting the optimum laying conditions

- **Ambidextrous taken**
- **Innovative design**
- **Laying extension deporting fixing points (optional)**
- **Patented**
- **Aluminium end caps**
- **Customizable in all RAL colors**
- **Comply with the NF S 61-937 standard**
- **Streamlining of stock: 1 EM handle in 90 or 120 mm width**

CPREG™-2 ELECTROMAGNETIC HANDLES

3000 mm

NF S 61 937 | 24/48 VOLTS DC | **PV N° SD13 00 50** - CNPP

- Ambidextrous hand grip
- Innovative design
- Extension of fitting deporting fixing points
- Patented
- Aluminium end caps
- Customizable in all RAL colors

CPREG-2/300AS

CHARACTERISTICS

Dimensions H x W x D	CPREG-2/300	3000 x 90,40 x 69,71 mm
	CPREG-E/300	3000 x 57,6 x 23,5 mm

V DC	12-24V DC	ImA DC	960-480 mA
°C	-10 +60 °C	IP	42
V/A	24V DC-1 A	DaN	2 x 300*

* Maximal theoretical holding forces, for an implementation meeting the optimum laying conditions

48 VOLTS DC

Available in 48V DC
NF S 61-937 compliant
Contact us!

CPREG-2/300AS	Electromagnetic handle CPREG-2 3000 mm 2 x 300 DaN 12/24V DC + contact natural anodizing	15 kg
CPREG-2/300B	Electromagnetic handle CPREG-2 3000 mm 2 x 300 DaN 12/24V DC + contact mill finish	15 kg
CPREG-E/300AS	Extension for CPREG-2/300AS natural anodizing	3,5 kg
CPREG-E/300B	Extension for CPREG-2/300B mill finish	3,5 kg

Customs code 83014019

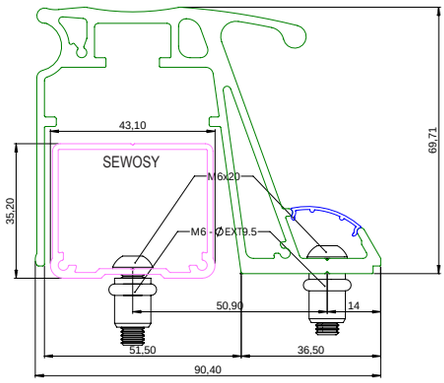

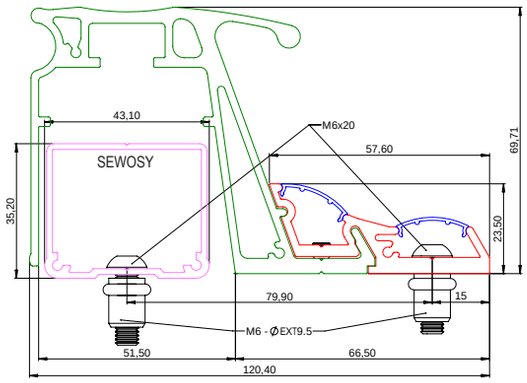

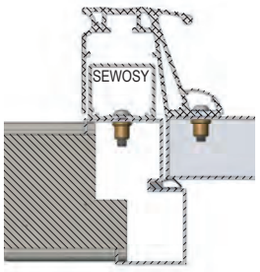

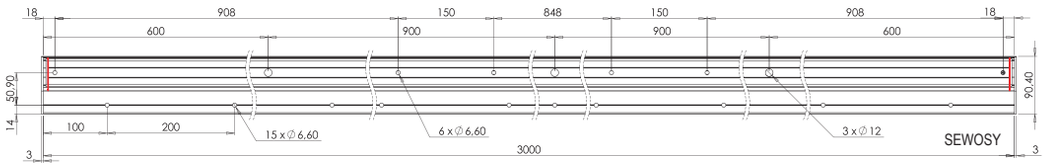

CPREG™-2 ELECTROMAGNETIC HANDLES

reinforcement profiles for CPREG™-2 3000 mm

- Allow fixation through the door
- Integrated handle (CPREG-P)

CPREG-P/3000AS

CPREG-S/3000AS

CHARACTERISTICS

Dimensions H x W x D	CPREG-P/3000	3000 x 72 x 42,6 mm
	CPREG-S/3000	3000 x 40 x 15 mm

CPREG-P/3000AS	Reinforcement profile with handle CPREG-P 3000 mm natural anodizing	6 kg	
CPREG-P/3000B	Reinforcement profile with handle CPREG-P 3000 mm mill finish	6 kg	
CPREG-S/3000AS	Reinforcement profile CPREG-S 3000 mm natural anodizing	3 kg	
CPREG-S/3000B	Reinforcement profile CPREG-S 3000 mm mill finish	3 kg	Customs code 83014019

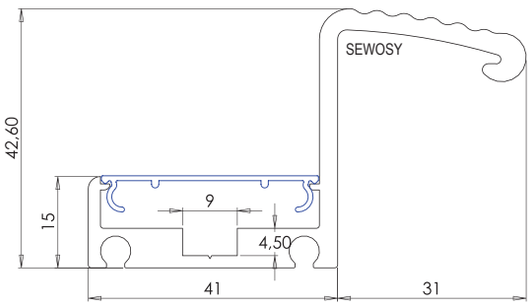

CPREG-P/3000AS

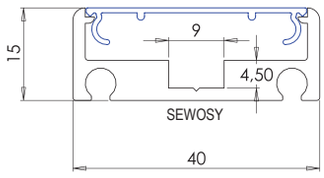

CPREG-S/3000AS

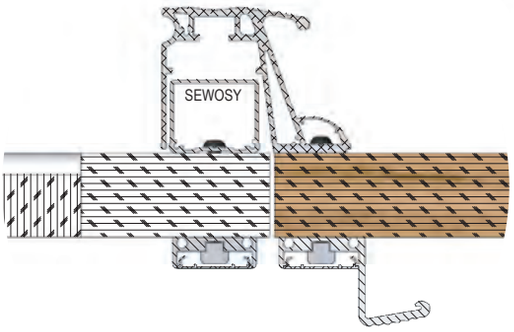

CPREG™-2 ELECTROMAGNETIC HANDLES

2500 mm

NF S 61 937 — 24/48 VOLTS DC — **PV N° SD13 00 50 A** - CNPP

- Ambidextrous hand grip
- Innovative design
- Extension of fitting deporting fixing points
- Patented
- Aluminium end caps
- Customizable in all RAL colors

CPREG-2/250AS

CHARACTERISTICS

Dimensions H x W x D	CPREG-2/250	2500 x 90,40 x 69,71 mm
	CPREG-E/250	2500 x 57,6 x 69,71 mm

V DC	12-24V DC	ImA DC	960-480 mA
°C	-10 +60 °C	IP	42
V/A	24V DC-1 A	DaN	2 x 300*

* Maximal theoretical holding forces, for an implementation meeting the optimum laying conditions

48 VOLTS DC

Available in 48V DC
NF S 61-937 compliant
Contact us!

CPREG-2/250AS	Electromagnetic handle CPREG-2 2500 mm 2 x 300 DaN 12/24V DC + contact natural anodizing	13 kg
CPREG-2/250B	Electromagnetic handle CPREG-2 2500 mm 2 x 300 DaN 12/24V DC + contact mill finish	13 kg
CPREG-E/250AS	Extension for CPREG-2/250AS natural anodizing	2,2 kg
CPREG-E/250B	Extension for CPREG-2/250B mill finish	2,2 kg

Customs code 83014019

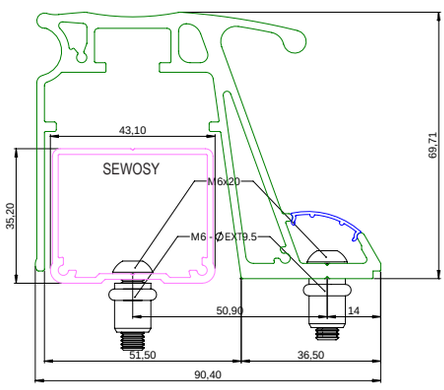

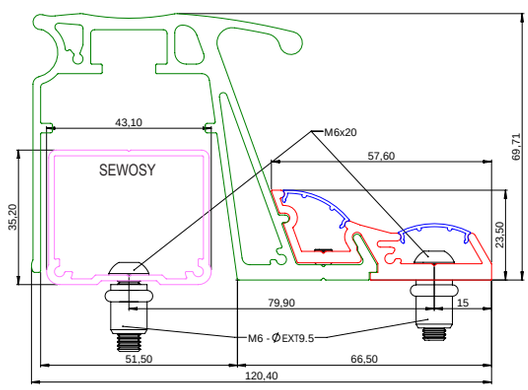

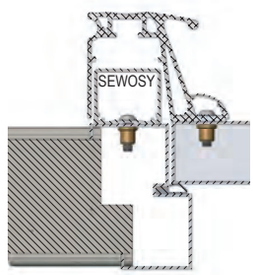

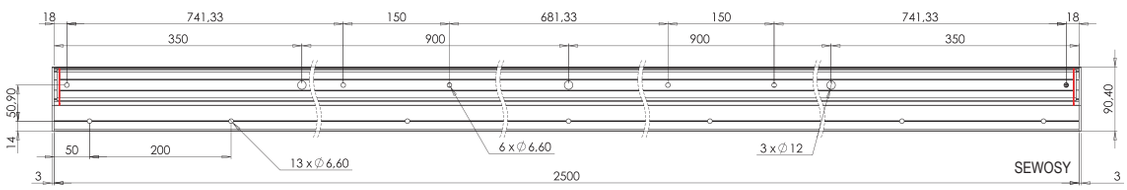

CPREG™-2 ELECTROMAGNETIC HANDLES

reinforcement profiles for CPREG™-2 2500 mm

- Allow fixation through the door
- Integrated handle (CPREG-P)

CPREG-P/2500AS

CPREG-S/2500AS

CHARACTERISTICS

Dimensions H x W x D	CPREG-P/2500	2500 x 72 x 42,6 mm
	CPREG-S/2500	2500 x 40 x 15 mm

CPREG-P/2500AS	Reinforcement profile with handle CPREG-P 2500 mm natural anodizing	5 kg	
CPREG-P/2500B	Reinforcement profile with handle CPREG-P 2500 mm mill finish	5 kg	
CPREG-S/2500AS	Reinforcement profile CPREG-S 2500 mm natural anodizing	2,5 kg	
CPREG-S/2500B	Reinforcement profile CPREG-S 2500 mm mill finish	2,2 kg	Customs code 83014019

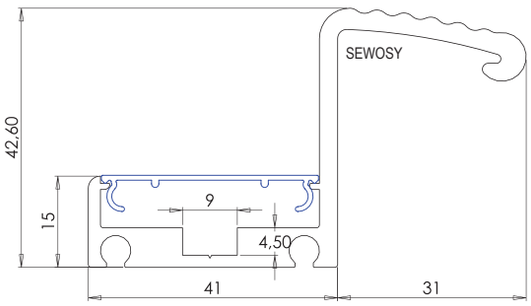

CPREG-P/2500AS

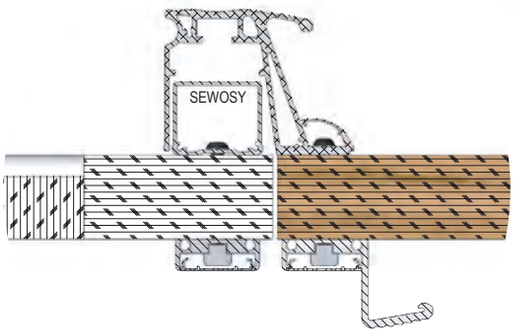

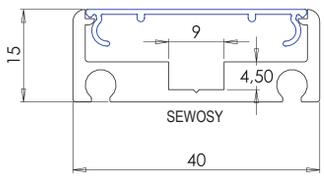

CPREG-S/2500AS

CPREG™-2 ELECTROMAGNETIC HANDLES

2200 mm

NF S 61 937 | 24/48 VOLTS DC | **PV N° SD13 00 50** - CNPP

- Ambidextrous hand grip
- Innovative design and length
- Extension of fitting deporting fixing points
- Patented
- Aluminium end caps
- Customizable in all RAL colors

CPREG-2/220AS

CHARACTERISTICS

Dimensions H x W x D	CPREG-2/220	2200 x 90,40 x 69,71 mm
	CPREG-E/220	2200 x 57,6 x 23,5 mm

V DC	12-24V DC	ImA DC	960-480 mA
°C	-10 +60 °C	IP	42
V/A	24V DC-1 A	DaN	2 x 300*

* Maximal theoretical holding forces, for an implementation meeting the optimum laying conditions

48 VOLTS DC

Available in 48V DC
NF S 61-937 compliant
Contact us!

CPREG-2/220AS	Electromagnetic handle CPREG-2 2200 mm 2 x 300 DaN 12/24V DC + contact natural anodizing	13 kg
CPREG-2/220B	Electromagnetic handle CPREG-2 2200 mm 2 x 300 DaN 12/24V DC + contact mill finish	13 kg
CPREG-E/220AS	Extension for CPREG-2/220AS natural anodizing	2,2 kg
CPREG-E/220B	Extension for CPREG-2/240B mill finish	2,2 kg

Customs code 83014019

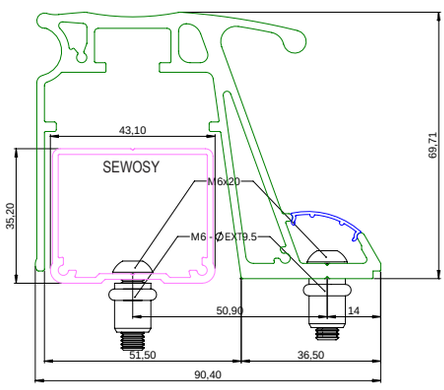

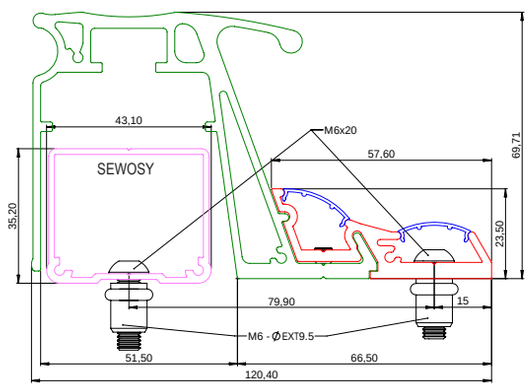

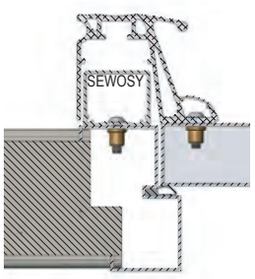

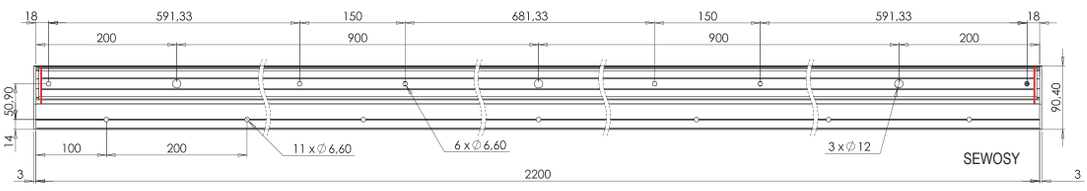

CPREG™-2 ELECTROMAGNETIC HANDLES

reinforcement profiles for CPREG™-2 2200 mm

- Allow fixation through the door
- Integrated handle (CPREG-P)

CPREG-P/2200AS

CPREG-S/2200AS

CHARACTERISTICS

Dimensions H x W x D	CPREG-P/2200	2200 x 72 x 42,6 mm
	CPREG-S/2200	2200 x 40 x 15 mm

CPREG-P/2200AS	Reinforcement profile with handle CPREG-P 2200 mm natural anodizing	5 kg	
CPREG-P/2200B	Reinforcement profile with handle CPREG-P 2200 mm mill finish	5 kg	
CPREG-S/2200AS	Reinforcement profile CPREG-S 2200 mm natural anodizing	2,5 kg	
CPREG-S/2200B	Reinforcement profile CPREG-S 2200 mm mill finish	2,2 kg	Customs code 83014019

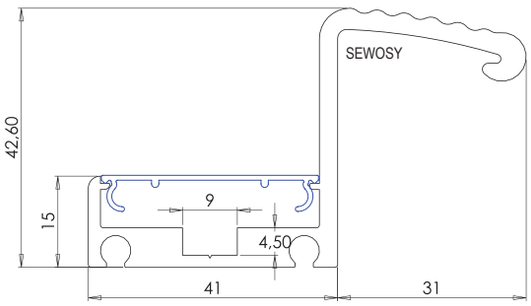

CPREG-P/2200AS

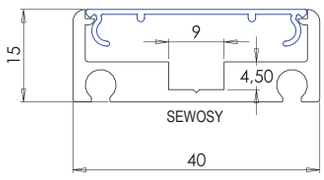

CPREG-S/2200AS

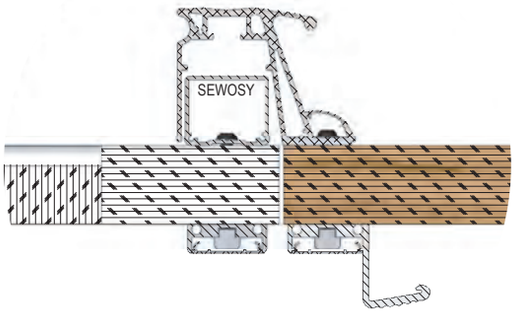

CPREG™-2 ELECTROMAGNETIC HANDLES

600 mm

NF S 61 937 | 24/48 VOLTS DC | **PV N° SD13 00 50** - CNPP

- Ambidextrous hand grip
- Innovative design
- Extension of fitting deporting fixing points
- Patented
- Aluminium end caps
- Customizable in all RAL colors

CPREG-2/60AS

CHARACTERISTICS

Dimensions H x W x D	CPREG-2/60	600 x 90,40 x 69,71 mm
	CPREG-E/60	600 x 57,6 x 23,5 mm

V DC	12-24V DC	ImA DC	960-480 mA
°C	-10 +60 °C	IP	42
V/A	24V DC-1 A	DaN	2 x 300*

* Maximal theoretical holding forces, for an implementation meeting the optimum laying conditions

48 VOLTS DC

Available in 48V DC
NF S 61-937 compliant
Contact us!

CPREG-2/60AS	Electromagnetic handle CPREG-2 600 mm 2 x 300 DaN 12/24V DC + contact Natural anodizing	6 kg
CPREG-2/60B	Electromagnetic handle CPREG-2 600 mm 2 x 300 DaN 12/24V DC + contact mill finish	6 kg
CPREG-E/60AS	Extension for CPREG-2/60AS natural anodizing	0,7 kg
CPREG-E/60B	Extension for CPREG-2/60B mill finish	0,7 kg

Customs code 83014019

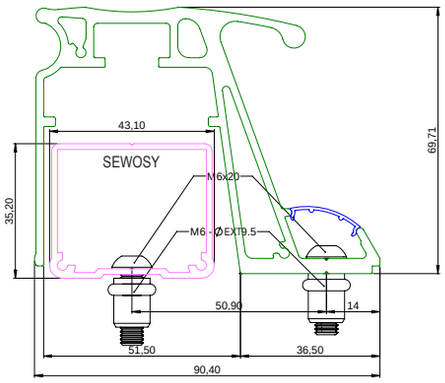

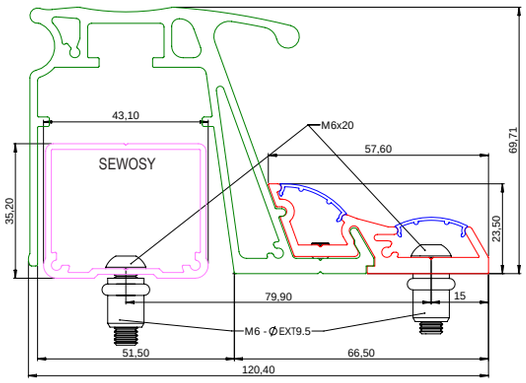

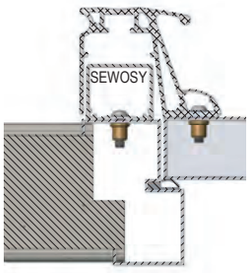

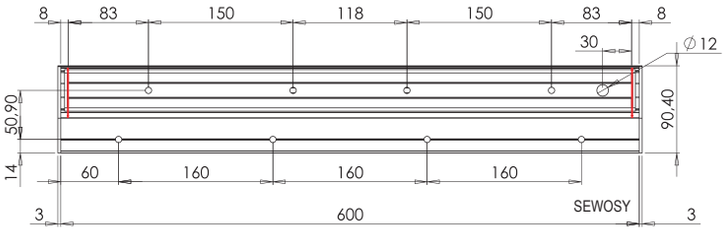

CPREG™-2 ELECTROMAGNETIC HANDLES

reinforcement profiles for CPREG™-2 600 mm

- Allow fixation through the door
- Integrated handle (CPREG-P)

CPREG-P/600AS

CPREG-S/600AS

CHARACTERISTICS

Dimensions H x W x D	CPREG-P/600	600 x 72 x 42,6 mm
	CPREG-S/600	600 x 40 x 15 mm

CPREG-P/600AS	Reinforcement profile with handle CPREG-P 600 mm natural anodizing	1 kg	
CPREG-P/600B	Reinforcement profile with handle CPREG-P 600 mm mill finish	1 kg	
CPREG-S/600AS	Reinforcement profile CPREG-S 600 mm natural anodizing	0,6 kg	
CPREG-S/600B	Reinforcement profile CPREG-S 600 mm mill finish	0,6 kg	Customs code 83014019

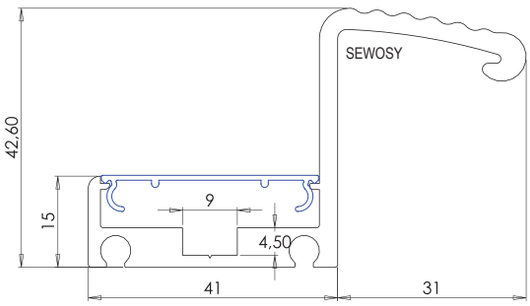

CPREG-P/600AS

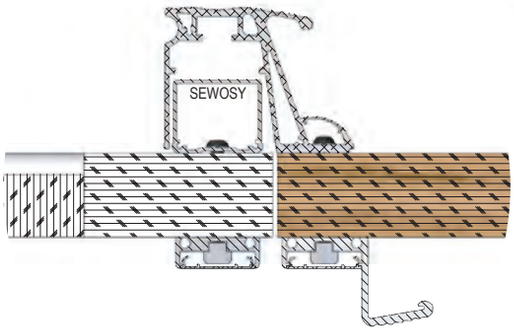

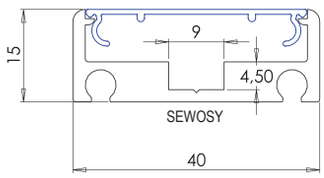

CPREG-S/600AS

CPREG™-2 ELECTROMAGNETIC HANDLES

400 mm

NF S 61 937 — 24/48 VOLTS DC — **PV N° SD13 00 50** - CNPP

- Ambidextrous hand grip
- Innovative design
- Extension of fitting deporting fixing points
- Patented
- Aluminium end caps
- Customizable in all RAL colors

CPREG-2/40AS

CHARACTERISTICS

Dimensions H x W x D	CPREG-2/40	400 x 90,40 x 69,71 mm
	CPREG-E/40	400 x 57,6 x 23,5 mm

V DC	12-24V DC	ImA DC	480-240 mA
°C	-10 +60 °C	IP	42
V/A	24V DC-1 A	DaN	300*

* Maximal theoretical holding forces, for an implementation meeting the optimum laying conditions

48 VOLTS DC

Available in 48V DC
NF S 61-937 compliant
Contact us!

CPREG-2/40AS	Electromagnetic handle CPREG-2 400 mm 300 DaN 12/24V DC + contact Natural anodizing	3,1 kg
CPREG-2/40B	Electromagnetic handle CPREG-2 400 mm 300 DaN 12/24V DC + contact mill finish	3 kg
CPREG-E/40AS	Extension for CPREG-2/40AS natural anodizing	0,5 kg
CPREG-E/40B	Extension for CPREG-2/40B mill finish	0,5 kg

Customs code 83014019

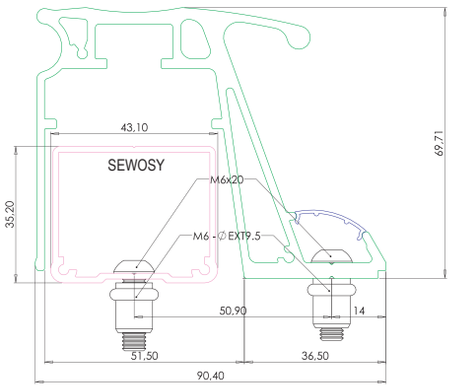

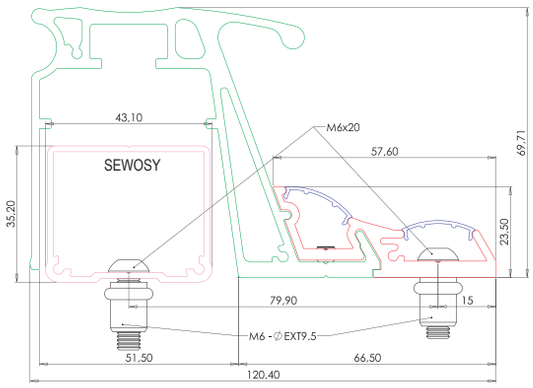

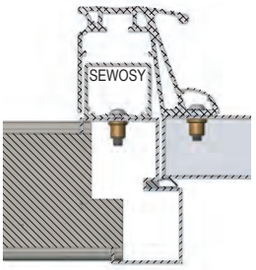

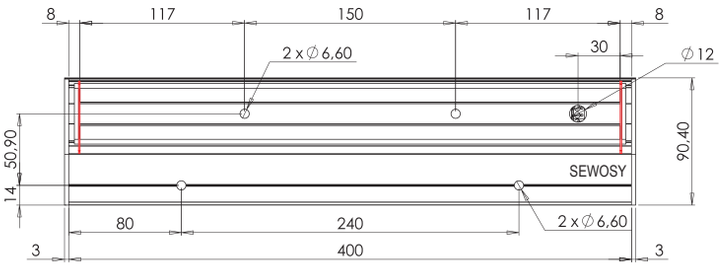

CPREG™-2 ELECTROMAGNETIC HANDLES

reinforcement profiles for CPREG™-2 400 mm

- Allow fixation through the door
- Integrated handle (CPREG-P)

CPREG-P/400AS

CPREG-S/400AS

CHARACTERISTICS

Dimensions H x W x D	CPREG-P/400	400 x 72 x 42,6 mm
	CPREG-S/400	400 x 40 x 15 mm

CPREG-P/400AS	Reinforcement profile with handle CPREG-P 400 mm natural anodizing	0,7 kg	
CPREG-P/400B	Reinforcement profile with handle CPREG-P 400 mm mill finish	0,7 kg	
CPREG-S/400AS	Reinforcement profile CPREG-S 400 mm natural anodizing	0,4 kg	
CPREG-S/400B	Reinforcement profile CPREG-S 400 mm mill finish	0,4 kg	Customs code 83014019

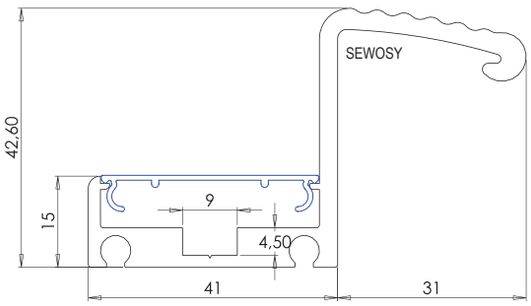

CPREG-P/400AS

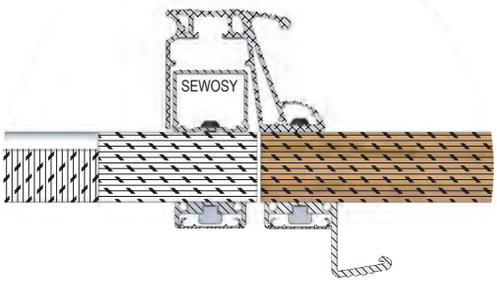

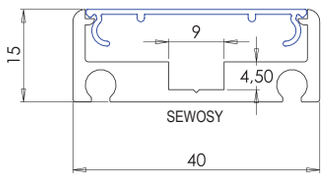

CPREG-S/400AS

CPREG™-2 ELECTROMAGNETIC HANDLES

services

- Made-to-measure
- All RAL colors available (see SEWOSY color chart)
- Fast execution

Powder coating:
On request (*)

POWDER COATING	On request (*) all RAL colors available
NUANCIER	RAL color chart
ANODIZING	On request
CPREG-2/CUT	Cut for CPREG-2
CPREG-2/RES	Supplementary reservation electromagnetic lock for CPREG-2
KITCPREG12-V	Supplementary electromagnetic lock kit for CPREG-1 and CPREG-2 12/24VDC

Customs code
83014019

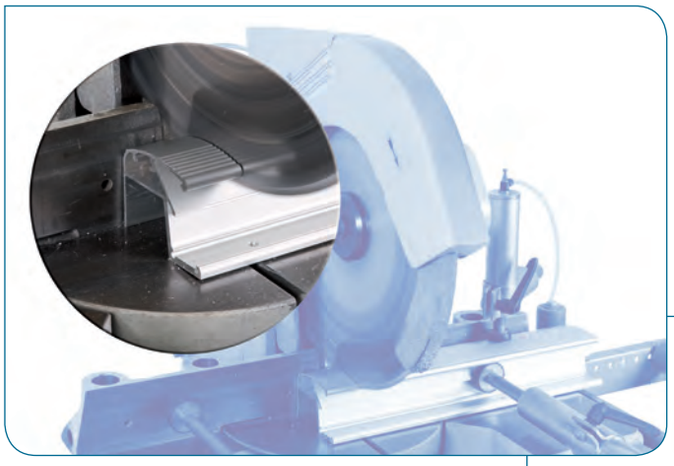

CPREG-2/CUT

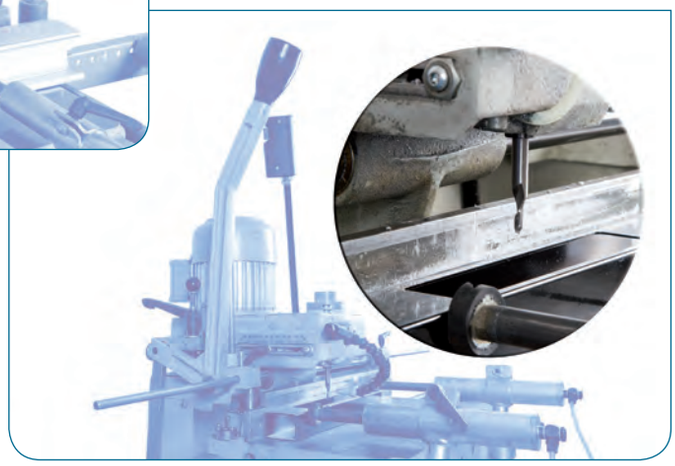

CPREG-2/RES

Customer satisfaction, an absolute priority

- Careful listening
- Commercial and technical advise
- Rapid and tailor-made answers

FOCUS ON THE CPREG™-3 ELECTROMAGNETIC HANDLE

The CPREG-3 are suitable for all types of doors

Their modularity allows easily fitting them to the door height without any cut!

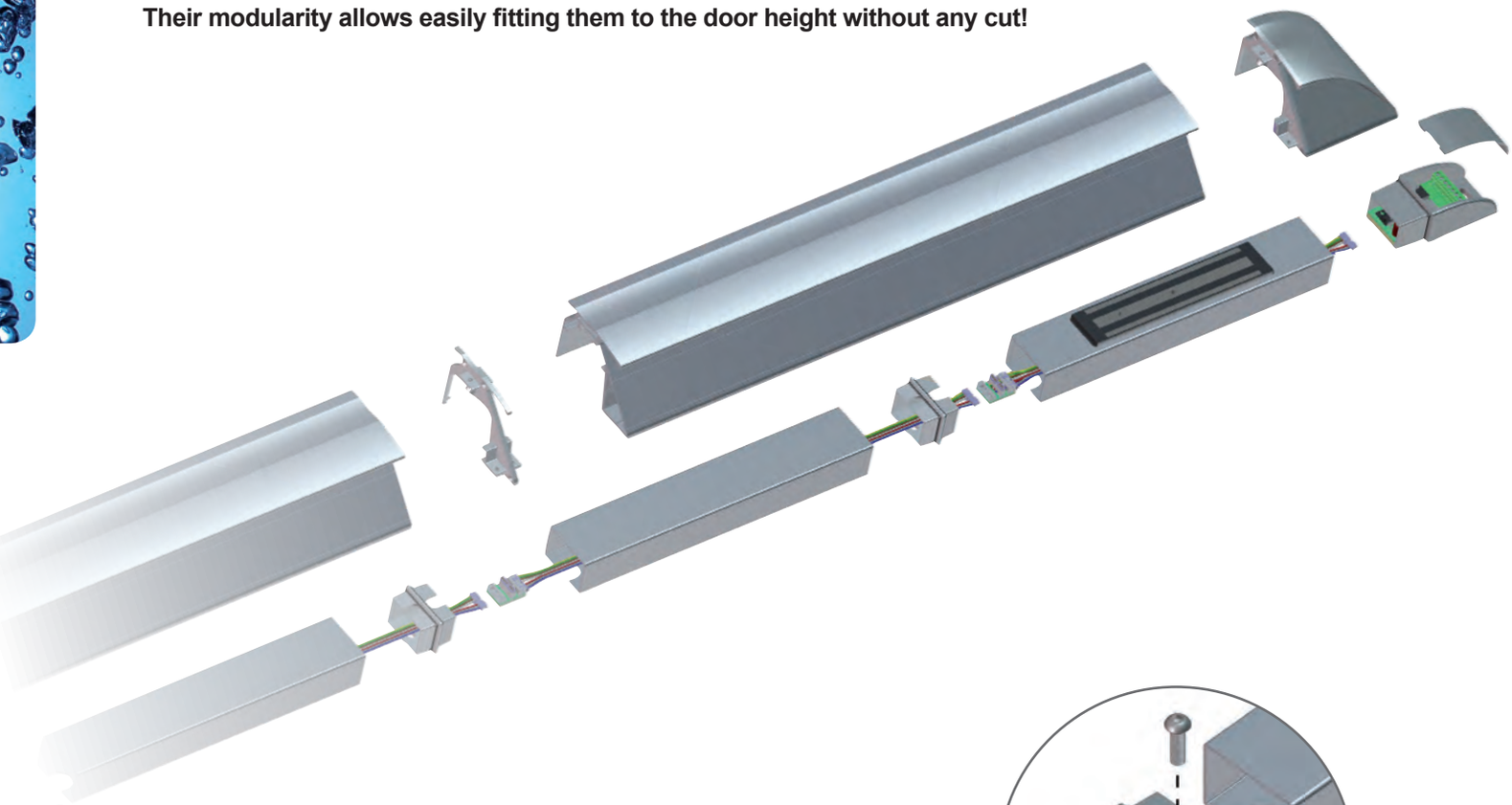

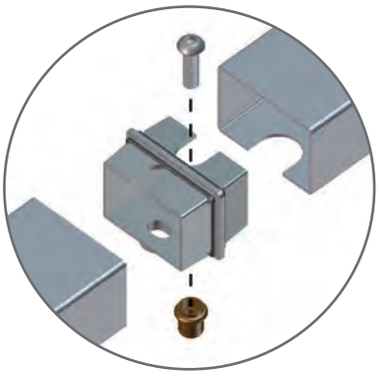

> **High strength of fixing points**
The fixing points have been designed to guarantee an optimum distance, thus offering better resistance to vandalism.

> **Scalability and energy savings**
One to 4 electromagnetic locks can be embedded, as the product is upgradeable! Furthermore it is energy efficient, its consuming being near zero when the door is open…

> **Simple as the Plug & Play**
… And the voltage automatically adjusts. Forgotten, the hassles of wiring, now you just Plug and Play!

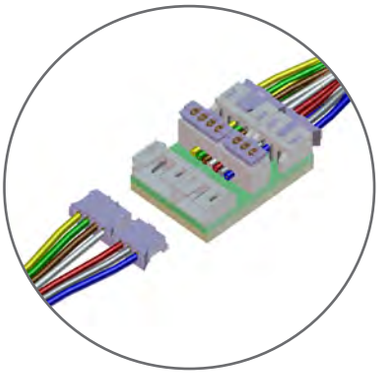

CPREG™-3 ELECTROMAGNETIC HANDLES

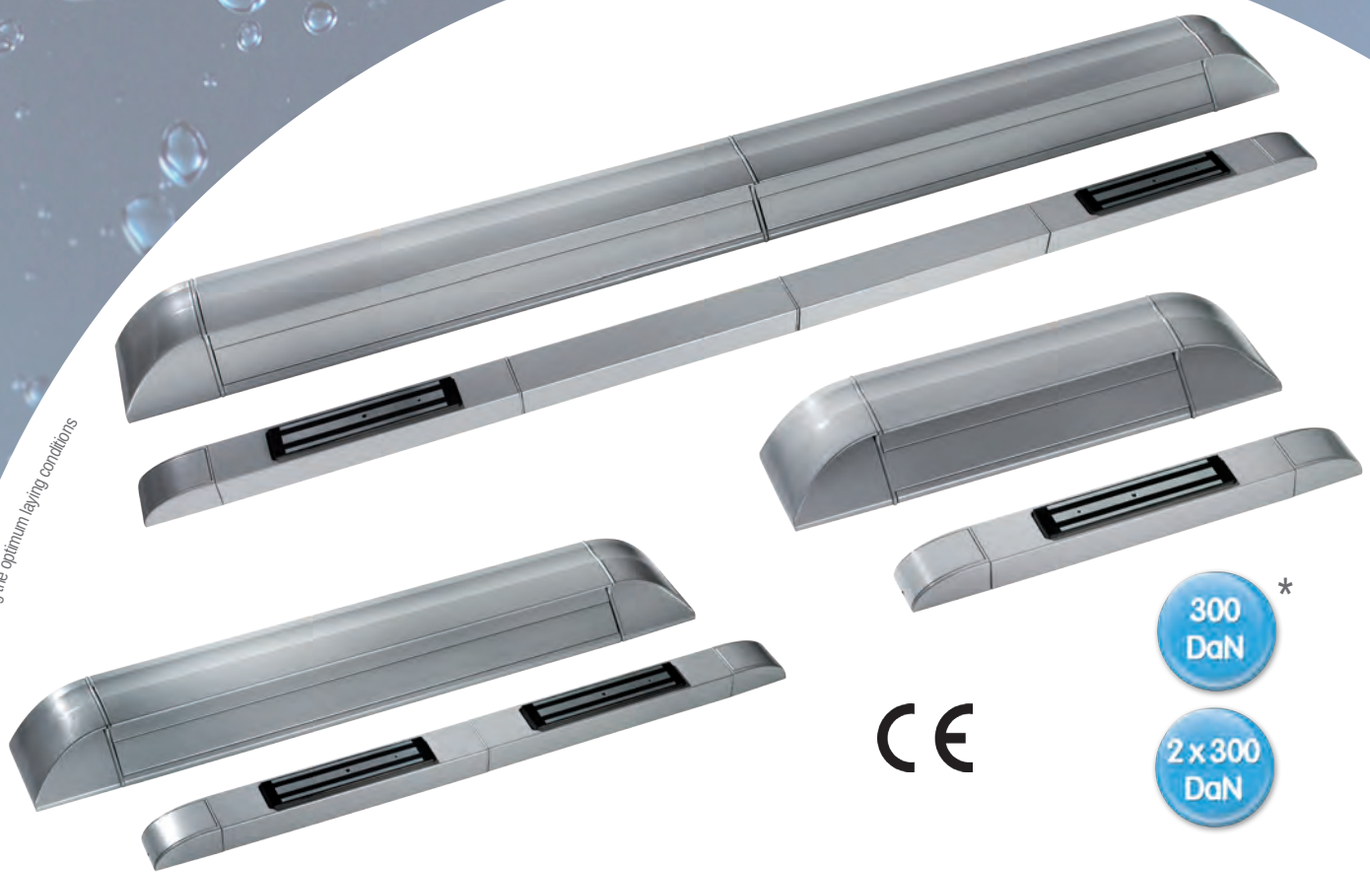

300 DaN *

2 x 300 DaN

CE

* Maximal theoretical holding forces, for an implementation meeting the optimum laying conditions

- **Modular and discreet**
- **Plug & Play connection**
- **Easy transport and storage**
- **Low consumption door open (0,4 W on average)**
- **Innovative aesthetic (finishing curved end caps)**
- **Patented**

NF S 61 937 24/48 VOLTS DC

CNPP
Certificate n°
SD 15 00 27

CPREG™-3 ELECTROMAGNETIC HANDLES

4 segments - 2 electromagnetic locks

NF S 61 937 — 24/48 VOLTS DC

CNPP
Certificate n°
SD 15 00 27

- Modular, fit all door heights without cutting
- Plug & Play connection
- Easy storing and transporting
- Low consumption door open (0.4 W on average)
- Innovative aesthetics (curved finishing end caps)
- Patented

CPREG-3/S4AS

CHARACTERISTICS

Dimensions H x W x D	CPREG-3/S4		1330 x 105 x 67,5 mm
V DC	12-48V DC	ImA DC	see table opposite
°C	-10 +60 °C	IP	42
V/A	125V AC-2 A 30V DC-2 A	DaN	2 x 300*

* Maximal theoretical holding forces, for an implementation meeting the optimum laying conditions

CPREG-3 / 2 electromagnetic locks			
CONSUMPTION			
Voltage	Door without constraint	Door under constraint	Door open
12V DC		1000 mA	17,5 mA
24V DC		500 mA	13,3 mA
48V DC		250 mA	12,3 mA

CPREG-3/S4AS	Modular electromagnetic handle CPREG-3 1330mm 2x 300DaN 12-48V DC + contact ; natural anodizing	N.C kg
CPREG-3/S4B	Modular electromagnetic handle CPREG-3 1330mm 2x 300DaN 12-48V DC + contact ; mill finish	N.C kg

Customs code
83014019

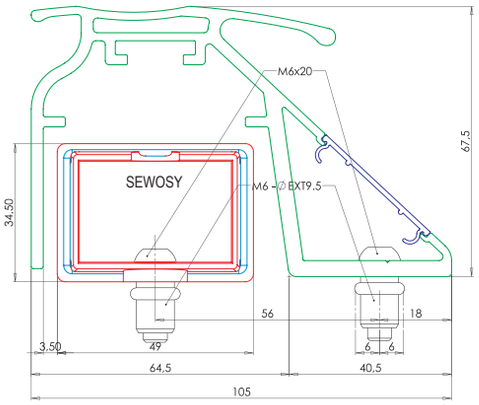

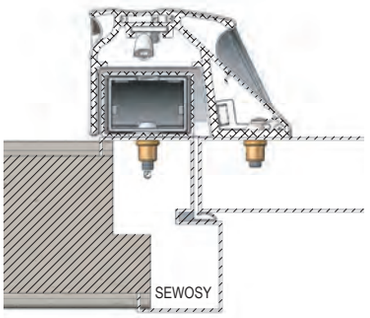

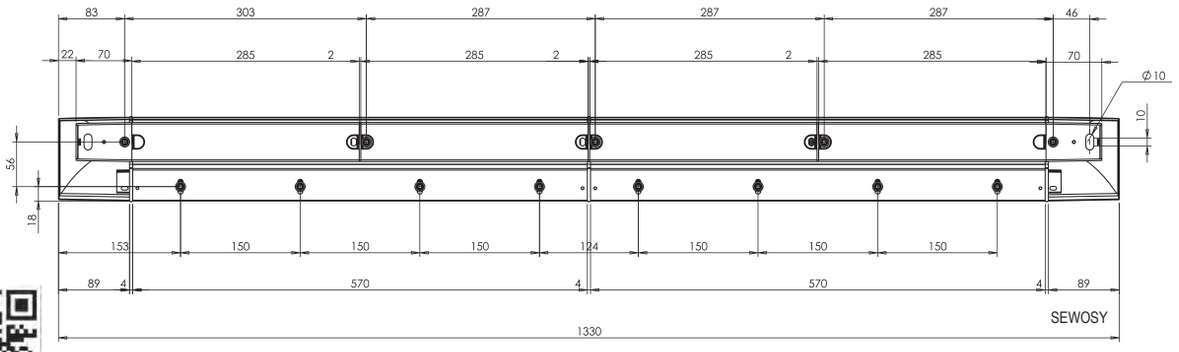

CPREG™-3 ELECTROMAGNETIC HANDLES

2 segments - 2 electromagnetic locks

NF S 61 937 24/48 VOLTS DC

CNPP
Certificate n°
SD 15 00 27

- Modular and discreet
- Plug & Play connection
- Easy storing and transporting
- Low consumption door open (0.4 W on average)
- Innovative aesthetics (curved finishing end caps)
- Patented

CPREG-3/S2AS

CHARACTERISTICS

Dimensions H x W x D	CPREG-3/S2		756 x 105 x 67,5 mm
V DC	12-48V DC	ImA DC	see table opposite
°C	-10 +60 °C	IP	42
V/A	125V AC-2 A 30V DC-2 A	DaN	2 x 300*

* Maximal theoretical holding forces, for an implementation meeting the optimum laying conditions

CPREG-3 / 2 electromagnetic locks			
CONSUMPTION			
Voltage	Door without constraint	Door under constraint	Door open
12V DC		1000 mA	17,5 mA
24V DC		500 mA	13,3 mA
48V DC		250 mA	12,3 mA

CPREG-3/S2AS	Modular electromagnetic handle CPREG-3 756mm 2x 300DaN 12-48V DC + contact ; natural anodizing	N.C kg
CPREG-3/S2B	Modular electromagnetic handle CPREG-3 756mm 2x 300DaN 12-48V DC + contact ; mill finish	N.C kg

Customs code
83014019

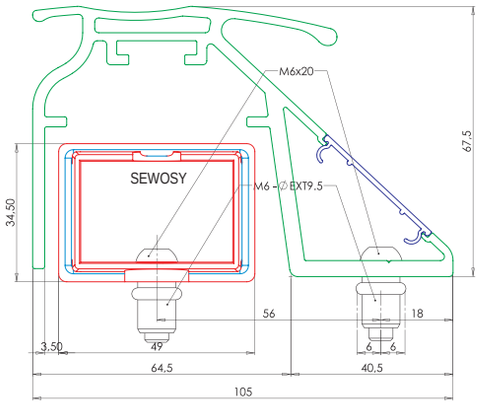

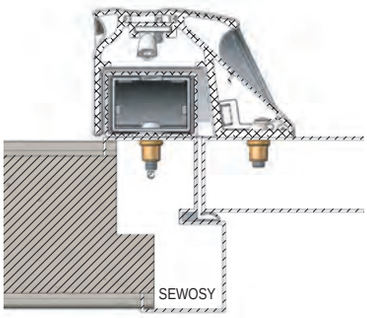

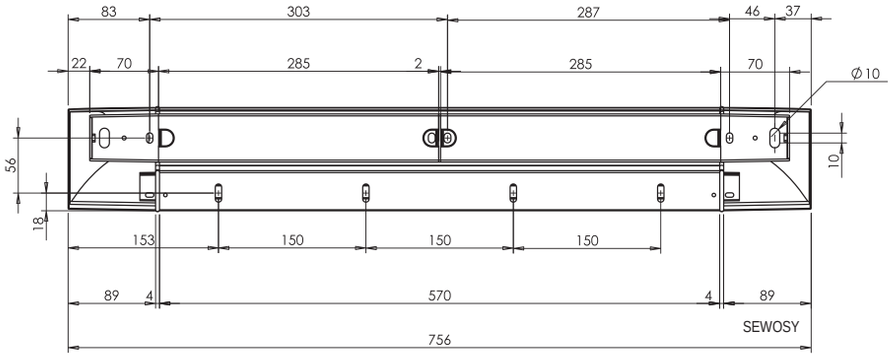

CPREG™-3 ELECTROMAGNETIC HANDLES

1 segment - 1 electromagnetic lock

NF S 61 937 — 24/48 VOLTS DC

CNPP
Certificate n°
SD 15 00 27

- Blend into their environment
- Plug & Play connection
- Easy storing and transporting
- Low consumption door open (0.4 W on average)
- Innovative aesthetics (curved finishing end caps)
- Patented

CPREG-3/S1AS

CHARACTERISTICS

Dimensions H x W x D	CPREG-3/S1		469 x 105 x 67,5 mm
V DC	12-48V DC	ImA DC	see table opposite
°C	-10 +60 °C	IP	42
V/A	125V AC-2 A 30V DC-2 A	DaN	300*

* Maximal theoretical holding forces, for an implementation meeting the optimum laying conditions

CPREG-3 / 1 electromagnetic lock			
CONSUMPTION			
Voltage	Door without constraint	Door under constraint	Door open
12V DC		500 mA	17,5 mA
24V DC		250 mA	13,3 mA
48V DC		125 mA	12,3 mA

CPREG-3/S1AS	Modular electromagnetic handle CPREG-3 469mm 300DaN 12-48V DC + contact ; natural anodizing	N.C kg	
CPREG-3/S1B	Modular electromagnetic handle CPREG-3 469mm 300DaN 12-48V DC + contact ; mill finish	N.C kg	Customs code 83014019

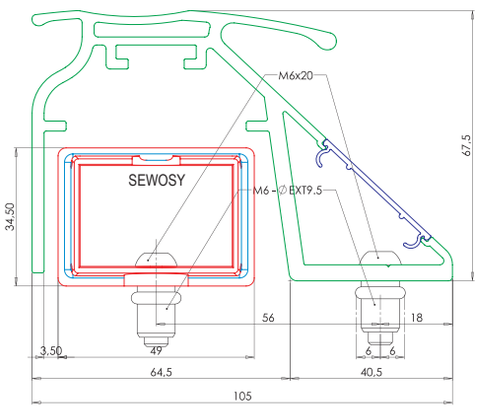

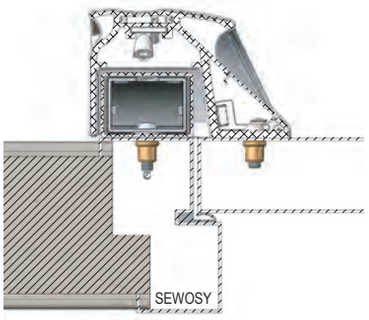

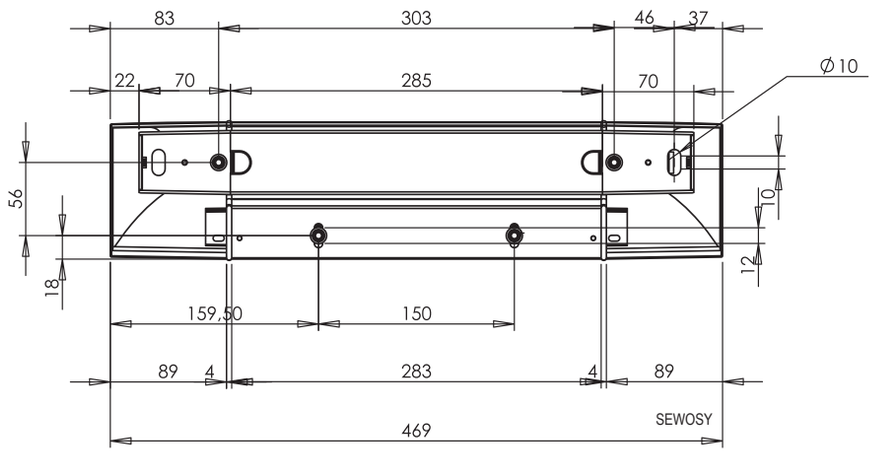

CPREG™-3 ELECTROMAGNETIC HANDLES

kit S2V2 - 2 electromagnetic locks

NF S 61 937 24/48 VOLTS DC

CNPP
Certificate n°
SD 15 00 27

- Used to add two more electromagnetic locks to CPREG-3
- Plug & Play connection
- Easy storing and transporting
- Patented

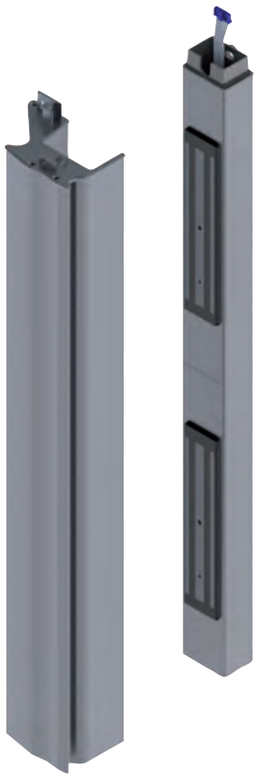

KITCPREG-3/S2V2AS

CHARACTERISTICS

Dimensions H x W x D	KITCPREG-3/S2V2		570 x 105 x 67,5 mm
V DC	12-48V DC	ImA DC	min. : 250 mA max. : 1000 mA
°C	-10 +60 °C	IP	42
DaN	2 x 300*		

* Maximal theoretical holding forces, for an implementation meeting the optimum laying conditions

KITCPREG-3/S2V2AS	Extension kit for modular electromagnetic handle CPREG-3 570mm+2 locks 300DAN 12-48V DC; natural anodizing	N.C kg	
KITCPREG-3/S2V2B	Extension kit for modular electromagnetic handle CPREG-3 570mm+2 locks 300DAN 12-48V DC; mill finish	N.C kg	Customs code 83014019

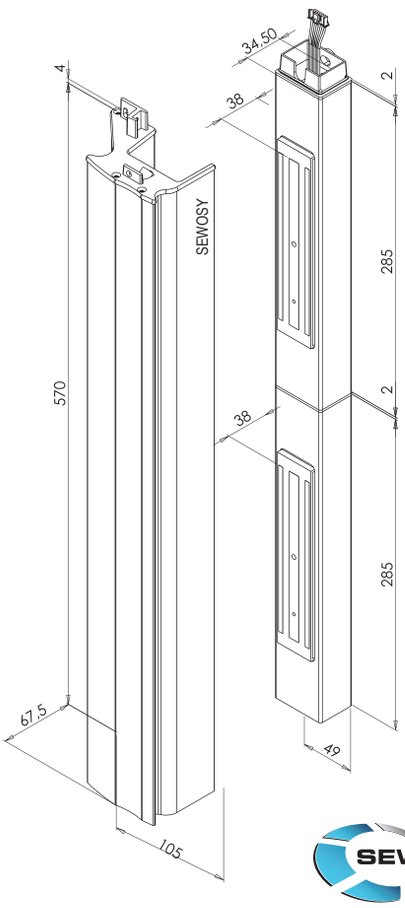

SEWOSY

CPREG™-3 ELECTROMAGNETIC HANDLES

kit S2V1 - 1 electromagnetic lock

NF S 61 937 24/48 VOLTS DC

CNPP
Certificate n°
SD 15 00 27

- Used to add one more electromagnetic lock to CPREG-3
- Allow to increase the height of CPREG-3
- Plug & Play connection
- Easy storing and transporting
- Patented

KITCPREG-3/S2V1AS

CHARACTERISTICS

Dimensions H x W x D	KITCPREG-3/S2V1		570 x 105 x 67,5 mm
V DC	12-48V DC	ImA DC	min. : 125 mA max. : 500 mA
°C	-10 +60 °C	IP	42
DaN	300*		

* Maximal theoretical holding forces, for an implementation meeting the optimum laying conditions

KITCPREG-3/S2V1AS	Extension kit for modular electromagnetic handle CPREG-3 570mm +1 lock 300DAN 12-48V DC; natural anodizing	N.C kg
KITCPREG-3/S2V1B	Extension kit for modular electromagnetic handle CPREG-3 570mm +1 lock 300DAN 12-48V DC; mill finish	N.C kg

Customs code
83014019

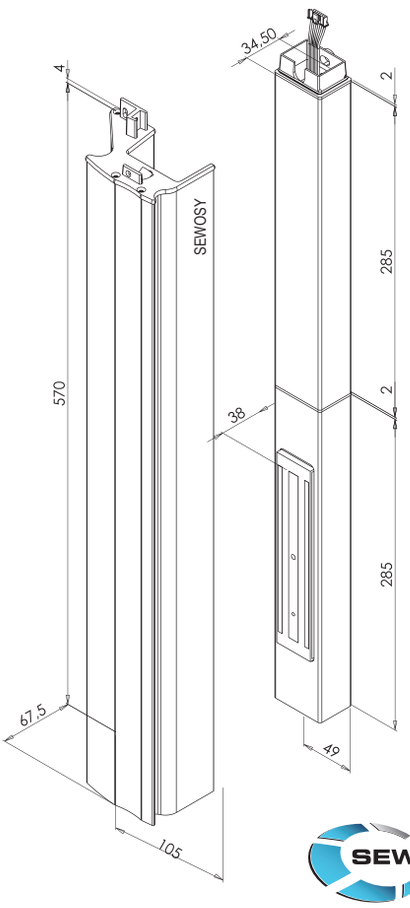

SEWOSY

CPREG™-3 ELECTROMAGNETIC HANDLES

kit S2NU

- Allow to increase the height of CPREG-3
- Plug & Play connection
- Easy storing and transporting
- Patented

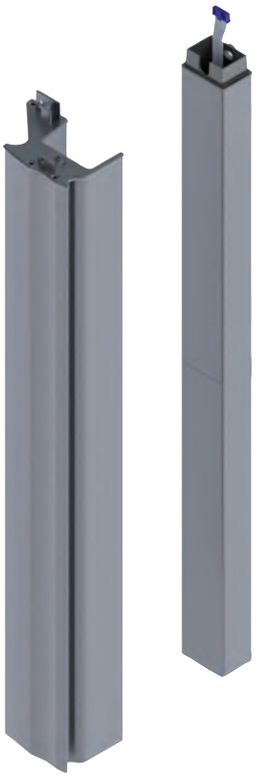

KITCPREG-3/S2NUAS

CHARACTERISTICS

Dimensions H x W x D	KITCPREG-3/S2NU	570 x 105 x 67,5 mm

KITCPREG-3/S2NUAS	Extension kit for modular electromagnetic handle CPREG-3 height 570mm without locks ; natural anodizing	N.C kg	
KITCPREG-3/S2NUB	Extension kit for modular electromagnetic handle CPREG-3 height 570mm without locks ; mill finish	N.C kg	Customs code 83014019

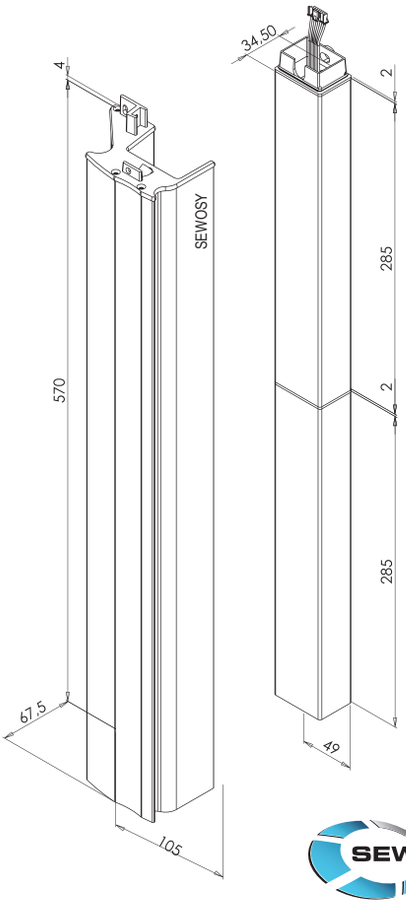

CPREG™-3 ELECTROMAGNETIC HANDLES

kit S1V1 - 1 electromagnetic lock

NF S 61 937 24/48 VOLTS DC

CNPP
Certificate n°
SD 15 00 27

- Used to add one more electromagnetic lock to CPREG-3
- Plug & Play connection
- Easy storing and transporting
- Patented

KITCPREG-3/S1V1AS

CHARACTERISTICS

Dimensions H x W x D	KITCPREG-3/S1V1		283 x 105 x 67,5 mm
V DC	12-48V DC	ImA DC	min. : 125 mA max. : 500 mA
°C	-10 +60 °C	IP	42
DaN	300*		

* Maximal theoretical holding forces, for an implementation meeting the optimum laying conditions

KITCPREG-3/S1V1AS	Extension kit for modular electromagnetic handle CPREG-3 283mm+1lock 300DAN 12-48V DC; natural anodizing	N.C kg	
KITCPREG-3/S1V1B	Extension kit for modular electromagnetic handle CPREG-3 283mm+1 lock 300DAN 12-48V DC; mill finish	N.C kg	Customs code 83014019

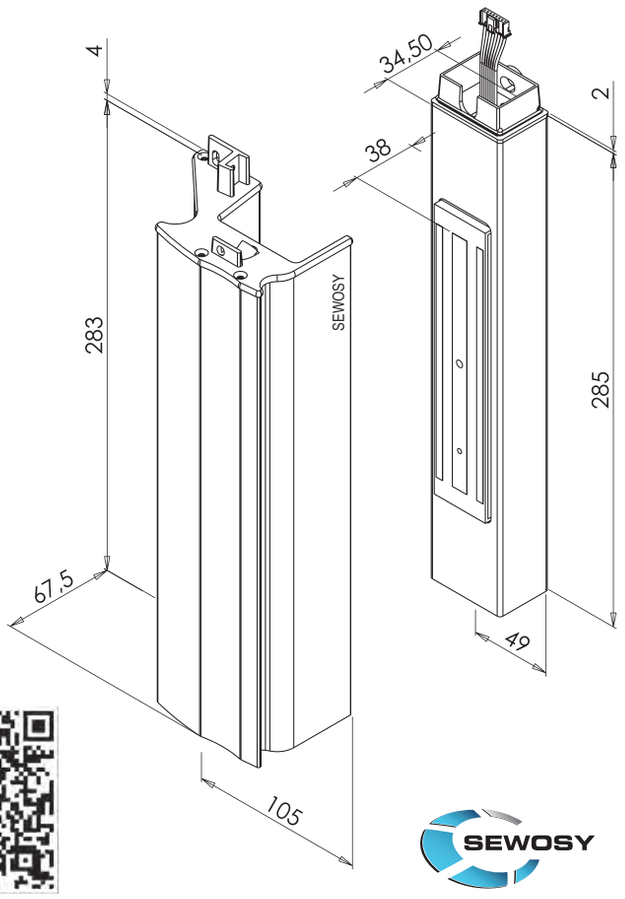

SEWOSY

CPREG™-3 ELECTROMAGNETIC HANDLES

kit S1NU

- Allow to increase the height of CPREG-3
- Plug & Play connection
- Easy storing and transporting
- Patented

KITCPREG-3/S1NUAS

CHARACTERISTICS

Dimensions H x W x D	KITCPREG-3/S1NU	283 x 105 x 67,5 mm

KITCPREG-3/S1NUAS	Extension kit for modular electromagnetic handle CPREG-3 height 283mm without locks ; natural anodizing	N.C kg	
KITCPREG-3/S1NUB	Extension kit for electromagnetic handle CPREG-3 height 283mm without locks ; mill finish	N.C kg	Customs code 83014019

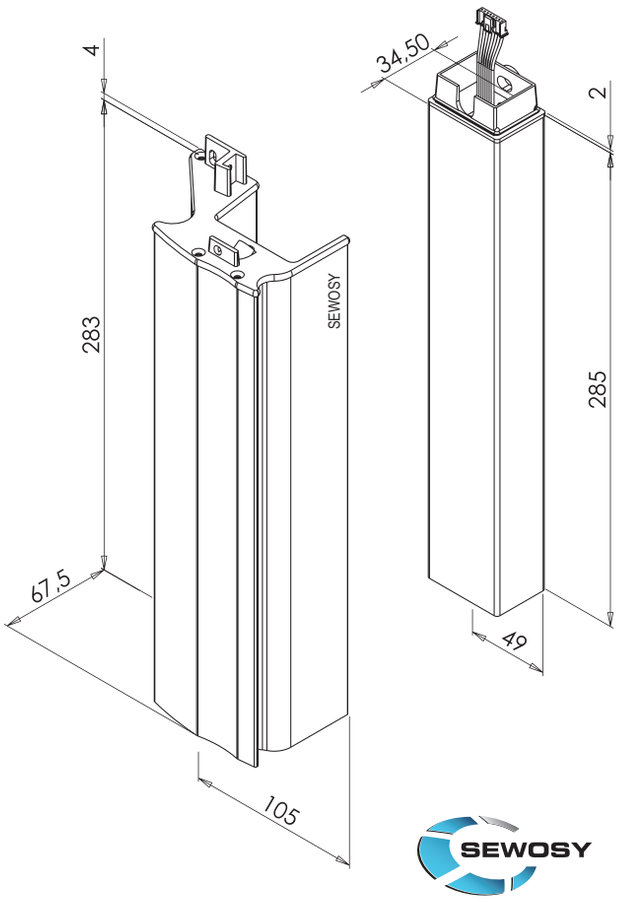

CPREG™-3 ELECTROMAGNETIC HANDLES

spare parts - services

- All RAL colors available (see SEWOSY color chart)
- Fast execution

Powder coating:
On request (*)

POWDER COATING	On request (*) all RAL colors available
NUANCIER	RAL color chart
ANODIZING	On request

Customs code
83014019

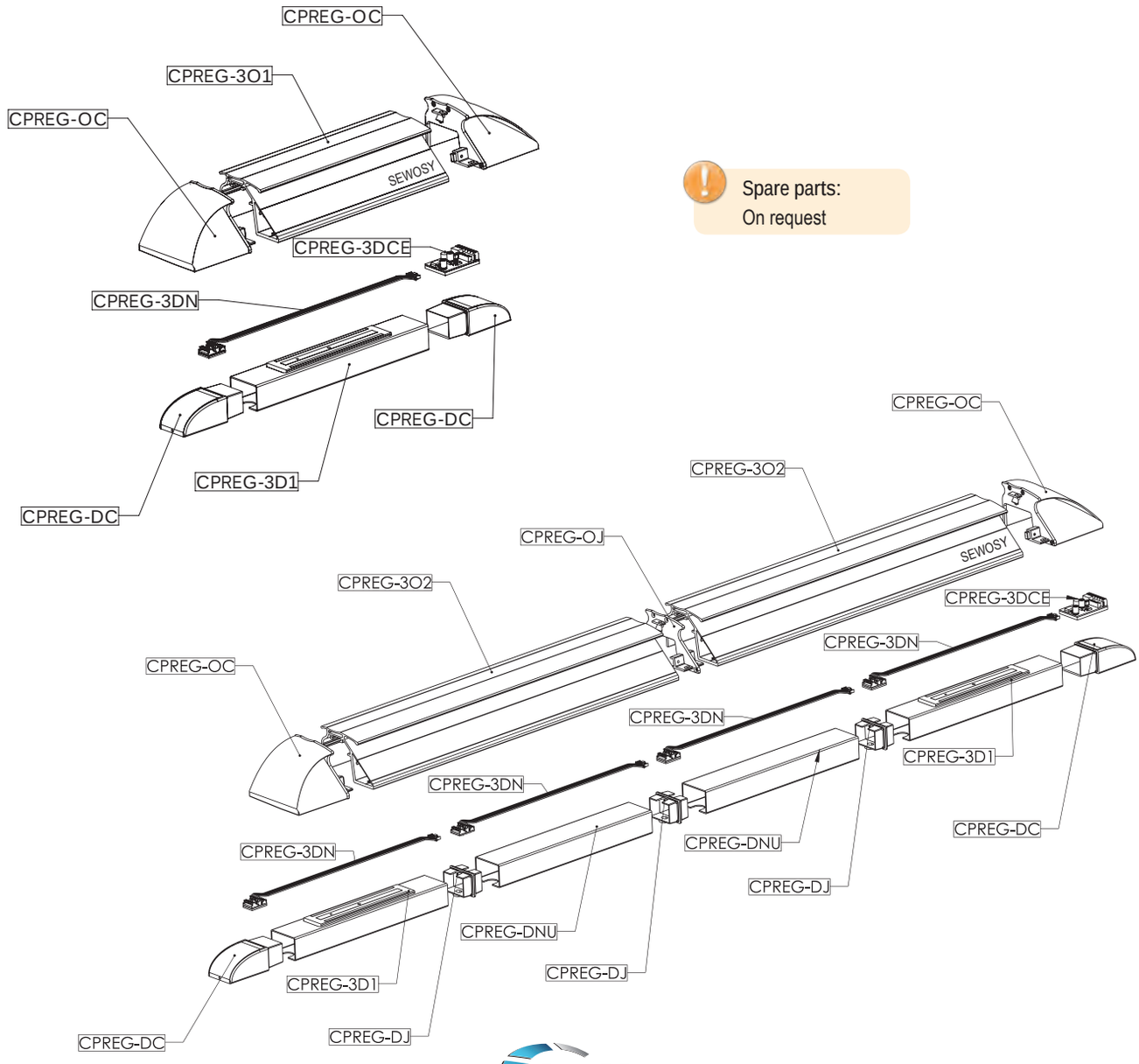

Spare parts:
On request

Eco-design, an R&D priority

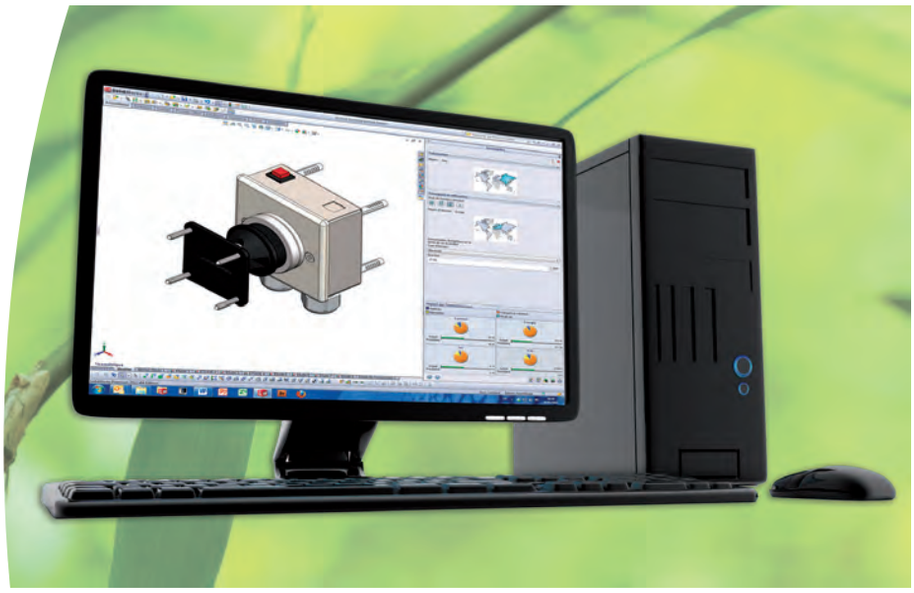

- Design of energy efficient products
- Measure of environmental impact
- Daily use of carbon balance tool

FOCUS ON CPREG™ 4 & 5 ELECTROMAGNETIC HANDLES

The CPREG-4 & 5 electromagnetic handles are suitable for all types of doors.

Their modularity allows easily fitting them to the door height without any cut!

> High accuracy of fixing points
The fixing points have been designed with great accuracy to guarantee an optimum distance, thus offering better resistance to vandalism.

> Scalability and energy savings
One to 4 electromagnetic locks can be embedded, as the product is upgradeable! Furthermore it is energy efficient, its consuming being near zero when the door is open, and 3 Watts only by magnet when the door is locked.

> Simple as the Plug & Play
… And the voltage automatically adjusts. Forgotten, the hassles of wiring, now you just Plug and Play!

The CPREG-5 are the top of the electromagnetic handles range and consume less than 1 Watt by magnet door locked!

SIGNIFICANT ENERGY SAVINGS

- AESTHETICS
- MODULAR
- ENERGY SAVINGS
- EASY TO CONNECT

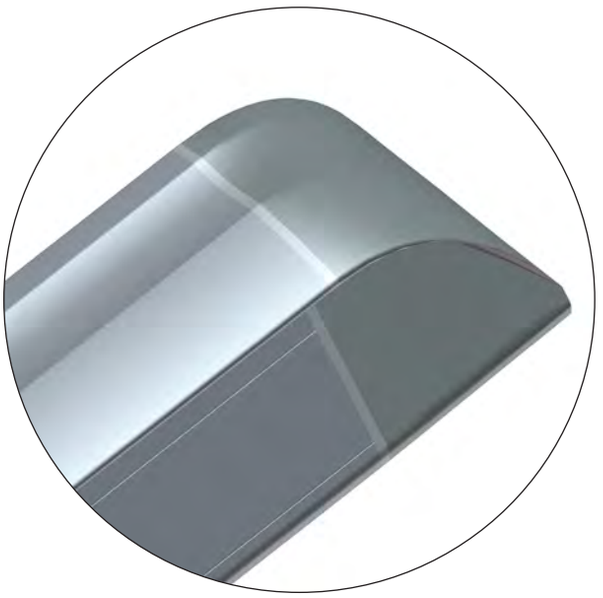

The CPREG™ 3, 4 & 5 are characterized by their curved end cap, for enhanced aesthetic of installations!

CPREG™-4 ELECTROMAGNETIC HANDLES

Available 2nd **quarter of 2015**

CE

300 DaN *

2 x 300 DaN

- **Modular and discreet**
- **Plug & Play connection**
- **Easy transport and storage**
- **Only 3 W consumption per magnet door locked**
- **Innovative aesthetic (finishing curved end caps)**
- **Patented**

SIGNIFICANT ENERGY SAVINGS

NF S 61 937 24/48 VOLTS DC

Query made
Dossier filed for 24/48V DC

* Maximal theoretical holding forces, for an implementation meeting the optimum laying conditions

CPREG™-4 ELECTROMAGNETIC HANDLES

4 segments - 2 electromagnetic locks

NF S 61 937 — 24/48 VOLTS DC

Query made
Dossier filed for
24/48V DC

- Modular, fit all door heights without cutting
- Plug & Play connection
- Easy storing and transporting
- Consumption of only 6 W door locked
- Innovative aesthetics (curved finishing end caps)
- Patented

CPREG-4/S4AS

CHARACTERISTICS

Dimensions H x W x D	CPREG-4/S4		1330 x 105 x 67,5 mm
V DC	12-48V DC	ImA DC	see table opposite
°C	-10 +60 °C	IP	42
V/A	125V AC-2 A 30V DC-2 A	DaN	2 x 300*

* Maximal theoretical holding forces, for an implementation meeting the optimum laying conditions

CPREG-4 / 2 electromagnetic locks			
CONSUMPTION			
Voltage	Door without constraint	Door under constraint	Door open
12V DC		500 mA	17,5 mA
24V DC		272 mA	13,3 mA
48V DC		158 mA	12,3 mA

CPREG-4/S4AS	Modular electromagnetic handle CPREG-4 1330mm 2x 300DaN 12-48V DC + contact ; natural anodizing	N.C kg
CPREG-4/S4B	Modular electromagnetic handle CPREG-4 1330mm 2x 300DaN 12-48V DC + contact ; mill finish	N.C kg

Customs code
83014019

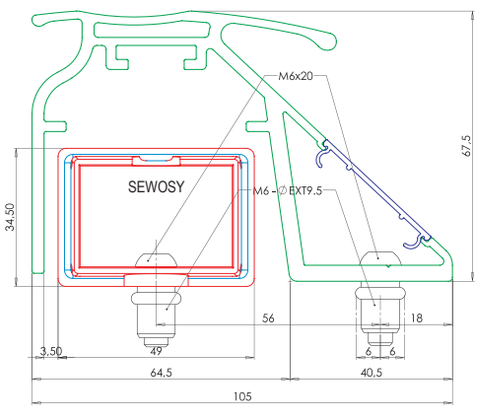

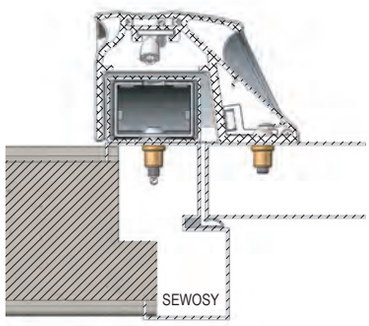

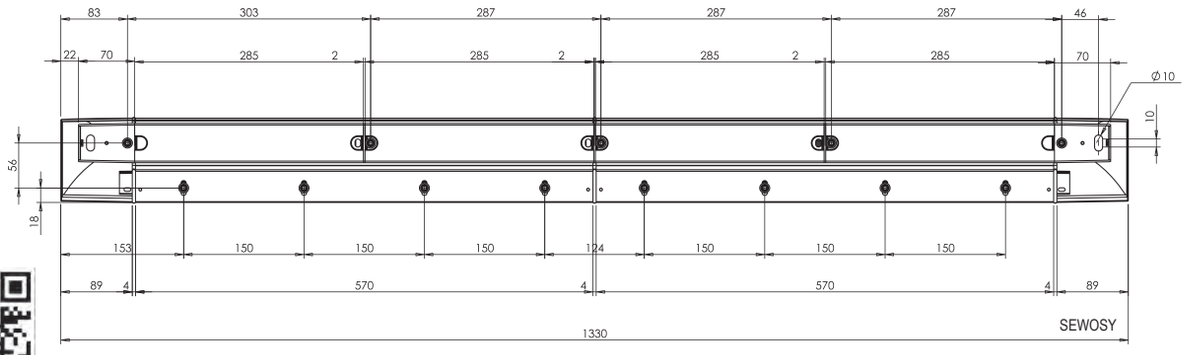

SEWOSY

CPREG™-4 ELECTROMAGNETIC HANDLES

2 segments - 2 electromagnetic locks

NF S 61 937 — 24/48 VOLTS DC

Query made
Dossier filed for
24/48V DC

- Modular and discreet
- Plug & Play connection
- Easy storing and transporting
- Consumption of only 6 W door locked
- Innovative aesthetics (curved finishing end caps)
- Patented

CPREG-4/S2AS

CHARACTERISTICS

Dimensions H x W x D	CPREG-4/S2		756 x 105 x 67,5 mm
V DC	12-48V DC	ImA DC	see table opposite
°C	-10 +60 °C	IP	42
V/A	125V AC-2 A 30V DC-2 A	DaN	2 x 300*

* Maximal theoretical holding forces, for an implementation meeting the optimum laying conditions

CPREG-4 / 2 electromagnetic locks			
CONSUMPTION			
Voltage	Door without constraint	Door under constraint	Door open
12V DC		500 mA	17,5 mA
24V DC		272 mA	13,3 mA
48V DC		158 mA	12,3 mA

CPREG-4/S2AS	Modular electromagnetic handle CPREG-4 756 mm 2x 300DaN 12-48V DC + contact ; natural anodizing	N.C kg
CPREG-4/S2B	Modular electromagnetic handle CPREG-4 756mm 2x 300DaN 12-48V DC + contact ; mill finish	N.C kg

Customs code
83014019

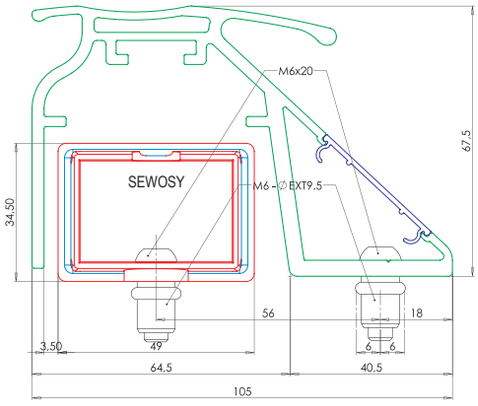

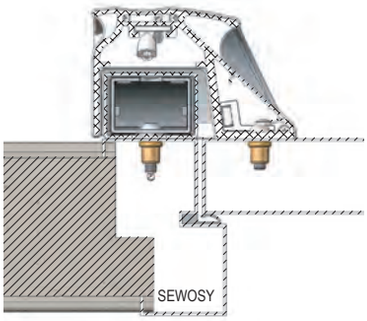

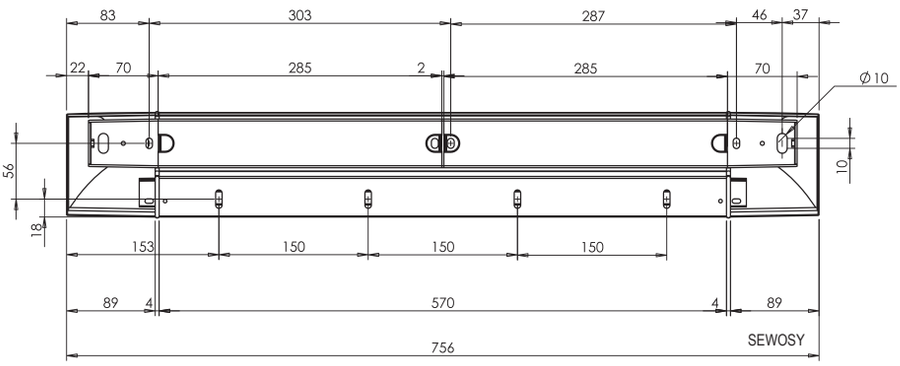

SEWOSY

CPREG™-4 ELECTROMAGNETIC HANDLES

1 segment - 1 electromagnetic lock

NF S 61 937 — 24/48 VOLTS DC

Query made
Dossier filed for
24/48V DC

- Blend into their environment
- Plug & Play connection
- Easy storing and transporting
- Consumption of only 3 W door locked
- Innovative aesthetics (curved finishing end caps)
- Patented

CPREG-4/S1AS

CHARACTERISTICS

Dimensions H x W x D	CPREG-4/S1		469 x 105 x 67,5 mm
V DC	12-48V DC	ImA DC	see table opposite
°C	-10 +60 °C	IP	42
V/A	125V AC-2 A 30V DC-2 A	DaN	300*

* Maximal theoretical holding forces, for an implementation meeting the optimum laying conditions

CPREG-4 / 1 electromagnetic lock			
CONSUMPTION			
Voltage	Door without constraint	Door under constraint	Door open
12V DC		250 mA	17,5 mA
24V DC		136 mA	13,3 mA
48V DC		79 mA	12,3 mA

CPREG-4/S1AS	Modular electromagnetic handle CPREG-4 469 mm 300DaN 12-48V DC + contact ; natural anodizing	N.C kg
CPREG-4/S1B	Modular electromagnetic handle CPREG-4 469mm 300DaN 12-48V DC + contact ; mill finish	N.C kg

Customs code
83014019

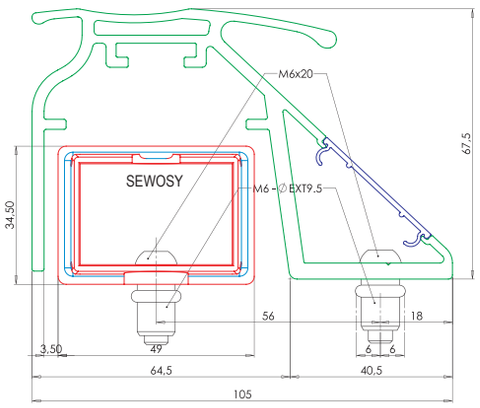

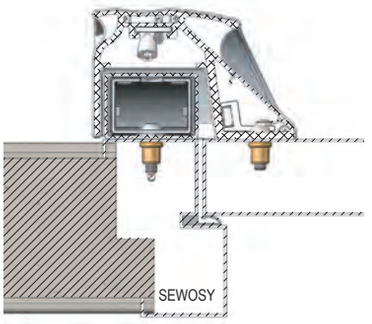

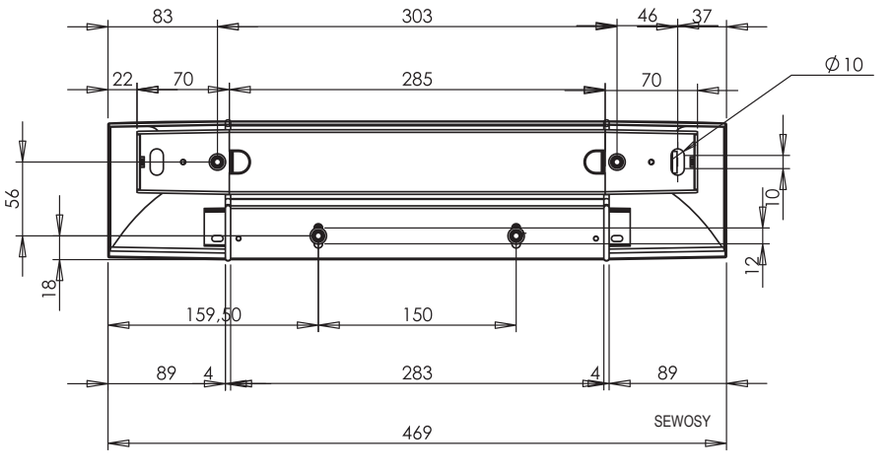

SEWOSY

CPREG™-4 ELECTROMAGNETIC HANDLES

kit S2V2 - 2 electromagnetic locks

NF S 61 937 24/48 VOLTS DC

Query made
Dossier filed for
24/48V DC

- Used to add two more electromagnetic locks to CPREG-4
- Plug & Play connection
- Easy storing and transporting
- Patented

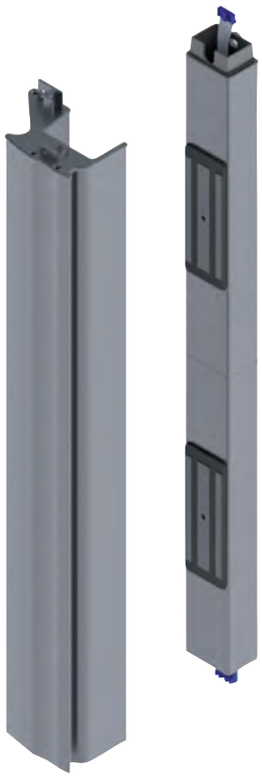

KITCPREG-4/S2V2AS

CHARACTERISTICS

Dimensions H x W x D	KITCPREG-4/S2V2		570 x 105 x 67,5 mm
V DC	12-48V DC	ImA DC	min. : 500 mA max. : 125 mA
°C	-10 +60 °C	IP	42
DaN	2 x 300*		

* Maximal theoretical holding forces, for an implementation meeting the optimum laying conditions

KITCPREG-4/S2V2AS	Extension kit for modular electromagnetic handle CPREG-4 570mm+2 locks 300DAN 12-48V DC; natural anodizing	N.C kg	
KITCPREG-4/S2V2B	Extension kit for modular electromagnetic handle CPREG-4 570mm+2 locks 300DAN 12-48V DC; mill finish	N.C kg	Customs code 83014019

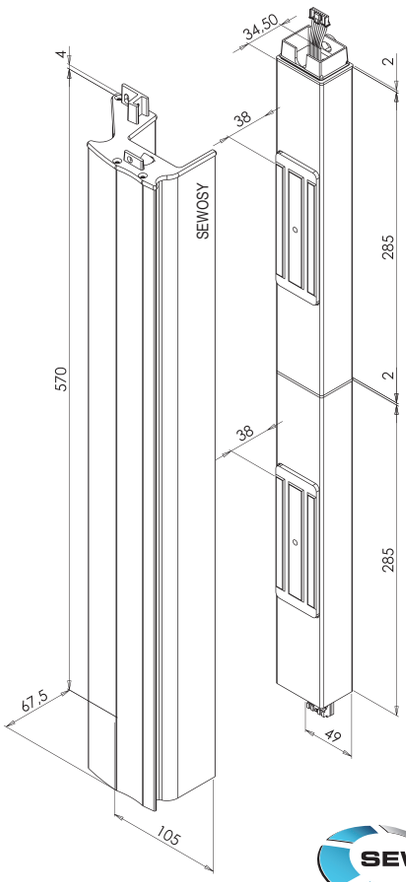

SEWOSY

CPREG™-4 ELECTROMAGNETIC HANDLES

kit S2V1 - 1 electromagnetic lock

NF S 61 937 24/48 VOLTS DC

Query made
Dossier filed for 24/48V DC

- Used to add one more electromagnetic lock to CPREG-4
- Allow to increase the height of CPREG-4
- Plug & Play connection
- Easy storing and transporting
- Patented

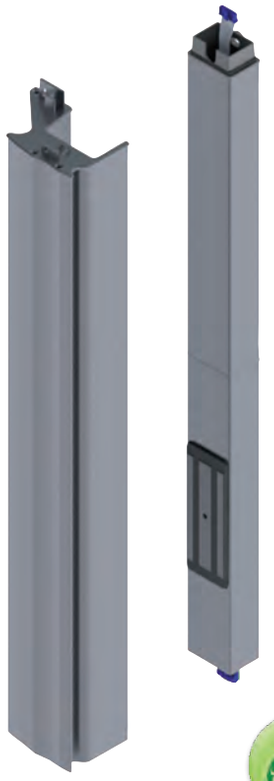

KITCPREG-4/S2V1AS

CHARACTERISTICS

Dimensions H x W x D	KITCPREG-4/S2V1		570 x 105 x 67,5 mm
V DC	12-48V DC	ImA DC	min. : 250 mA max. : 62,5 mA
°C	-10 +60 °C	IP	42
DaN	300*		

* Maximal theoretical holding forces, for an implementation meeting the optimum laying conditions

KITCPREG-4/S2V1AS	Extension kit for modular electromagnetic handle CPREG-4 570mm +1 lock 300DAN 12-48V DC; natural anodizing	N.C kg
KITCPREG-4/S2V1B	Extension kit for modular electromagnetic handle CPREG-4 570mm +1 lock 300DAN 12-48V DC; mill finish	N.C kg

Customs code 83014019

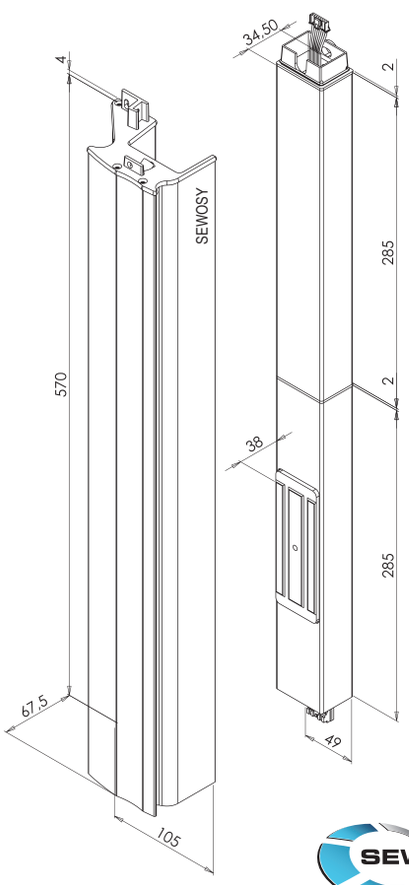

CPREG™-4 ELECTROMAGNETIC HANDLES

kit S2NU

- Allow to increase the height of CPREG-4
- Plug & Play connection
- Easy storing and transporting
- Patented

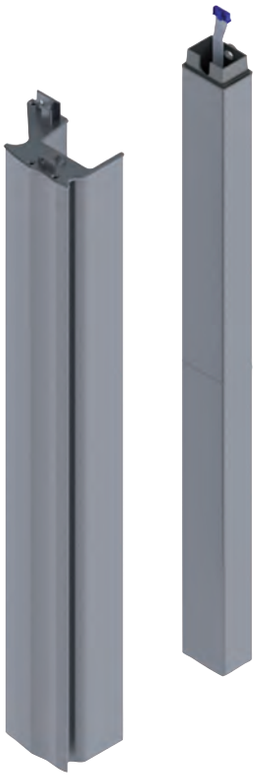

KITCPREG-4/S2NUAS

CHARACTERISTICS

Dimensions H x W x D	KITCPREG-4/S2NU	570 x 105 x 67,5 mm

KITCPREG-4/S2NUAS	Extension kit for modular electromagnetic handle CPREG-4 height 570mm without locks ; natural anodizing	N.C kg	
KITCPREG-4/S2NUB	Extension kit for modular electromgnatic handle CPREG-4 height 570mm without locks; mill finish	N.C kg	Customs code 83014019

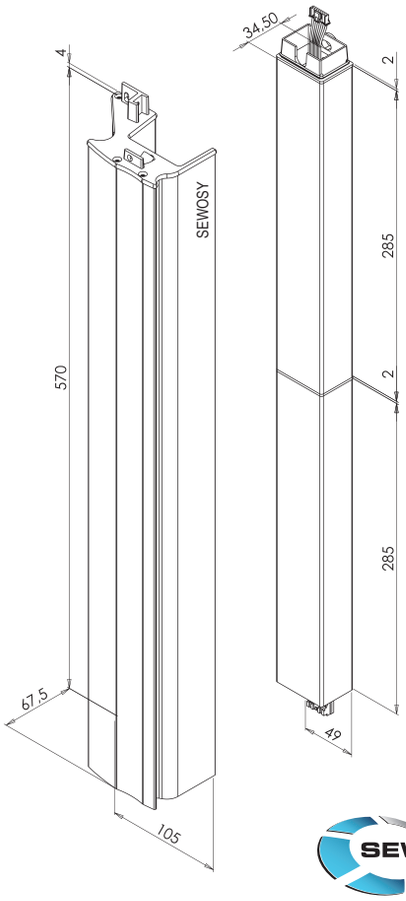

CPREG™-4 ELECTROMAGNETIC HANDLES

kit S1V1 - 1 electromagnetic lock

NF S 61 937 24/48 VOLTS DC

Query made
Dossier filed for
24/48V DC

- Used to add one more electromagnetic lock to CPREG-4
- Plug & Play connection
- Easy storing and transporting
- Patented

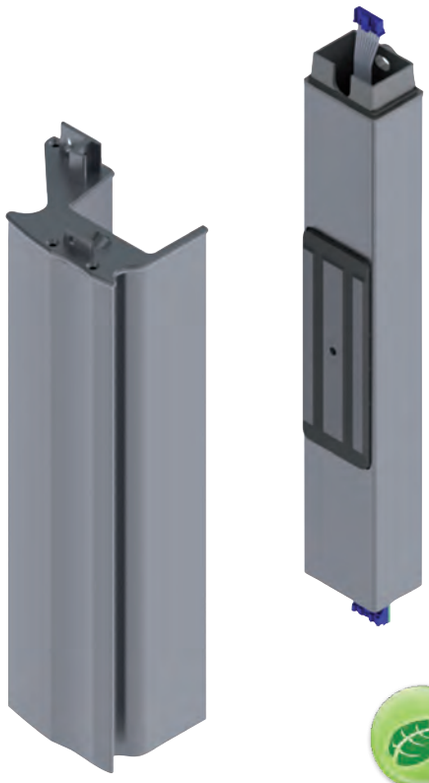

KITCPREG-4/S1V1AS

CHARACTERISTICS

Dimensions H x W x D	KITCPREG-4/S1V1	283 x 105 x 67,5 mm	
V DC	12-48V DC	ImA DC	min. : 250 mA max. : 62,5 mA
°C	-10 +60 °C	IP	42
DaN	300*		

* Maximal theoretical holding forces, for an implementation meeting the optimum laying conditions

KITCPREG-4/S1V1AS	Extension kit for modular electromagnetic handle CPREG-4 283mm +1 lock 300DAN 12-48V DC; natural anodizing	N.C kg	
KITCPREG-4/S1V1B	Extension kit for modular electromagnetic handle CPREG-4 283mm +1 lock 300DAN 12-48V DC; mill finish	N.C kg	Customs code 83014019

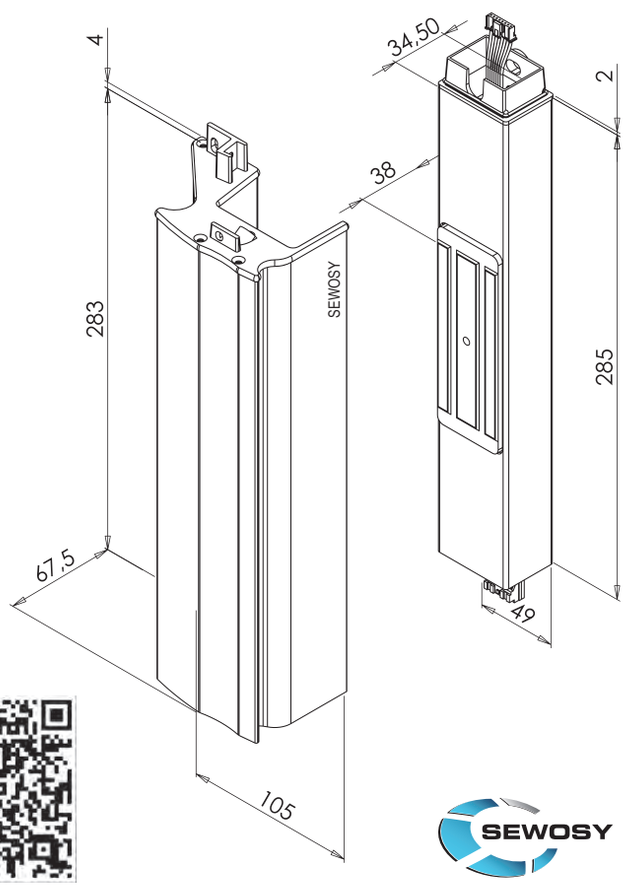

CPREG™-4 ELECTROMAGNETIC HANDLES

kit S1NU

- Allow to increase the height of CPREG-4
- Plug & Play connection
- Easy storing and transporting
- Patented

KITCPREG-4/S1NUAS

CHARACTERISTICS

Dimensions H x W x D	KITCPREG-4/S1NU	283 x 105 x 67,5 mm

KITCPREG-4/S1NUAS	Extension kit for modular electromagnetic handle CPREG-4 height 283mm without locks; natural anodizing	N.C kg	
KITCPREG-4/S1NUB	Extension kit for modular electromagnetic handle CPREG-4 height 283mm without locks ; mill finish	N.C kg	Customs code 83014019

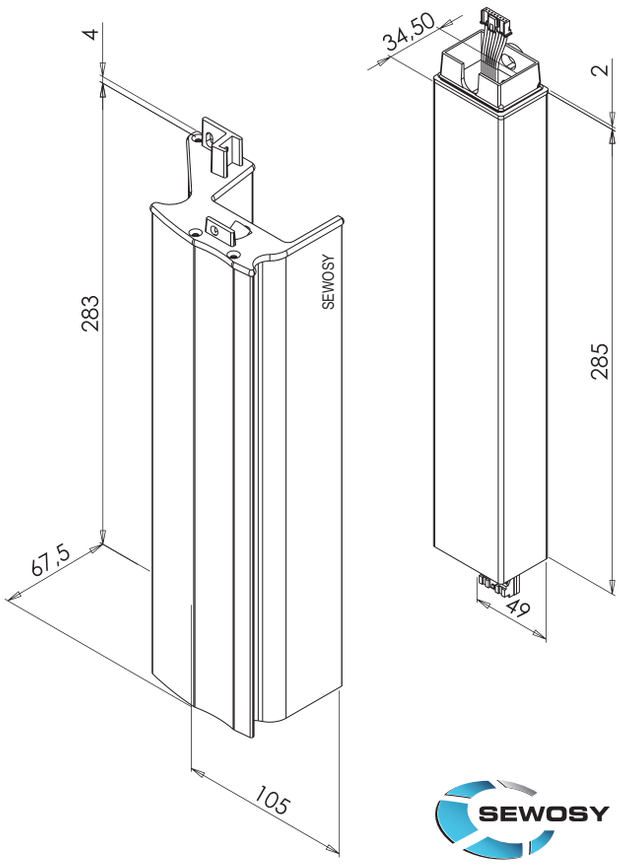

CPREG™-4 ELECTROMAGNETIC HANDLES

spare parts - services

- All RAL colors available (see SEWOSY color chart)
- Fast execution

Powder coating:
On request (*)

POWDER COATING	On request (*) all RAL colors available
NUANCIER	RAL color chart
ANODIZING	On request

Customs code
83014019

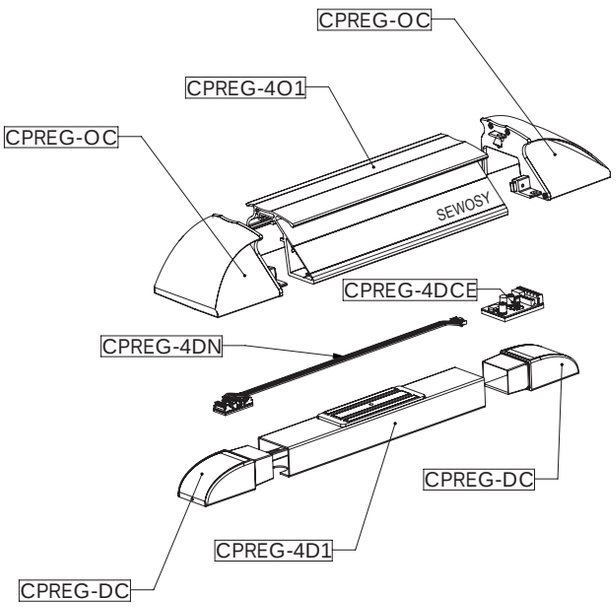

Spare parts:
On request

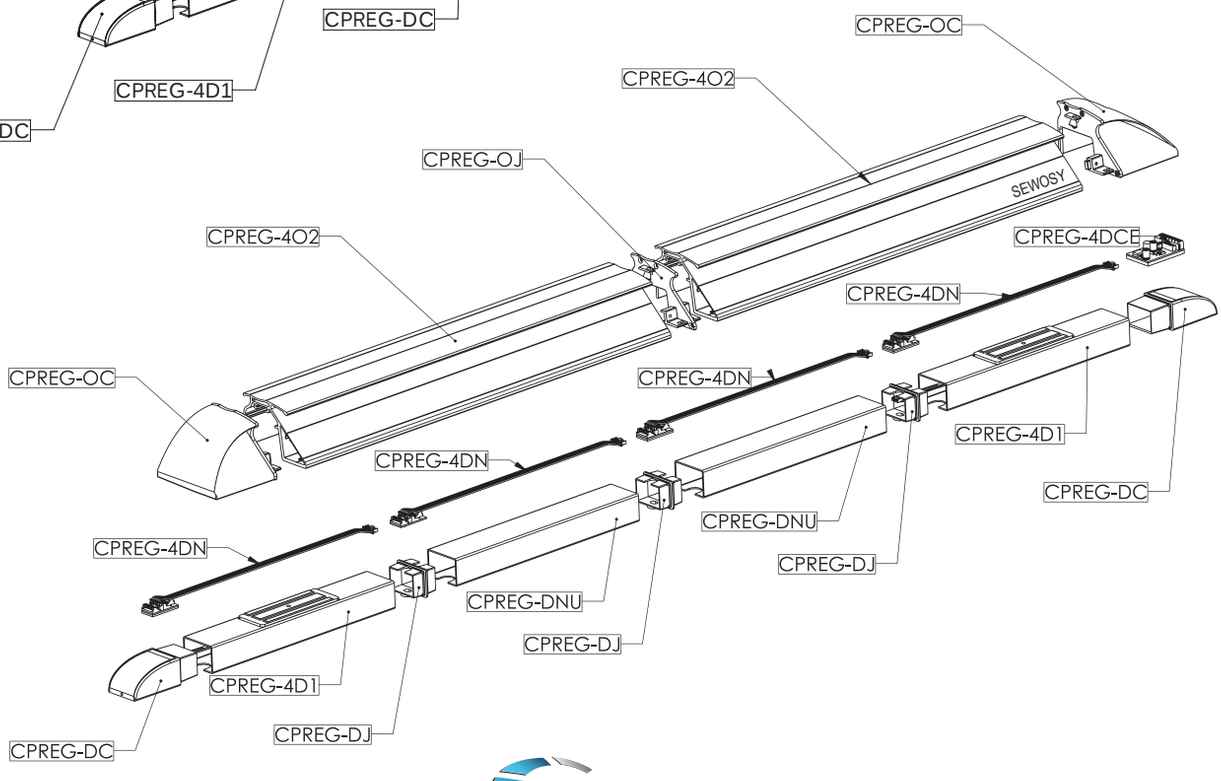

CPREG™-5 ELECTROMAGNETIC HANDLES

Available 3rd **quarter of 2015**

CE

300 DaN *

2 x 300 DaN

- **Modular and discreet**
- **Plug & Play connection**
- **Easy transport and storage**
- **Only 0,9 W consumption per magnet door locked**
- **Innovative aesthetic (finishing curved end caps)**
- **Patented**

SIGNIFICANT ENERGY SAVINGS

NF S 61 937 24/48 VOLTS DC

Query made
Dossier filed for 24/48V DC

* Maximal theoretical holding forces, for an implementation meeting the optimum laying conditions

CPREG™-5 ELECTROMAGNETIC HANDLES

4 segments - 2 electromagnetic locks

NF S 61 937 — 24/48 VOLTS DC

Query made
Dossier filed for
24/48V DC

- Modular, fit all door heights without cutting
- Plug & Play connection
- Easy storing and transporting
- Consumption of only 1.8 W door locked
- Innovative aesthetics (curved finishing end caps)
- Patented

CPREG-5/S4AS

CHARACTERISTICS

Dimensions H x W x D	CPREG-5/S4		1330 x 105 x 67,5 mm
V DC	12-48V DC	ImA DC	see table opposite
°C	-10 +60 °C	IP	42
V/A	125V AC-2 A 30V DC-2 A	DaN	2 x 300*

* Maximal theoretical holding forces, for an implementation meeting the optimum laying conditions

CPREG-5 / 2 electromagnetic locks			
CONSUMPTION			
Voltage	Door without constraint	Door under constraint	Door open
12V DC	250 mA	500 mA	17,5 mA
24V DC	125 mA	272 mA	13,3 mA
48V DC	62 mA	158 mA	12,3 mA

CPREG-5/S4AS	Modular electromagnetic handle CPREG-5 1330mm 2x 300DaN 12-48V DC low energy+contact ; nat. anodizing	N.C kg
CPREG-5/S4B	Modular electromagnetic handle CPREG-5 1330mm 2x 300DaN 12-48V DC low energy + contact ; mill finish	N.C kg

Customs code
83014019

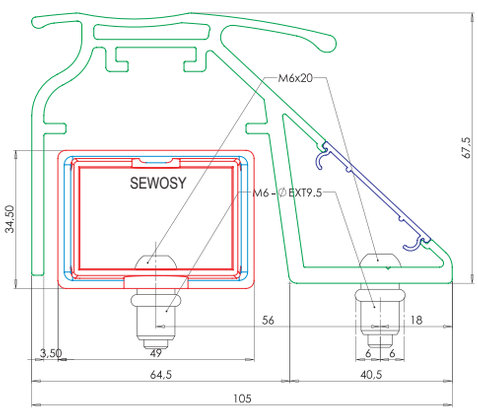

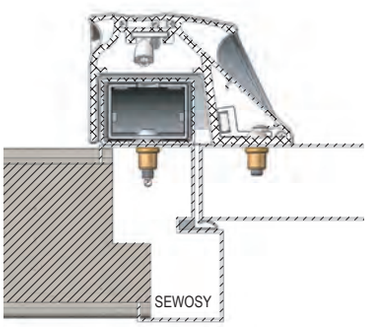

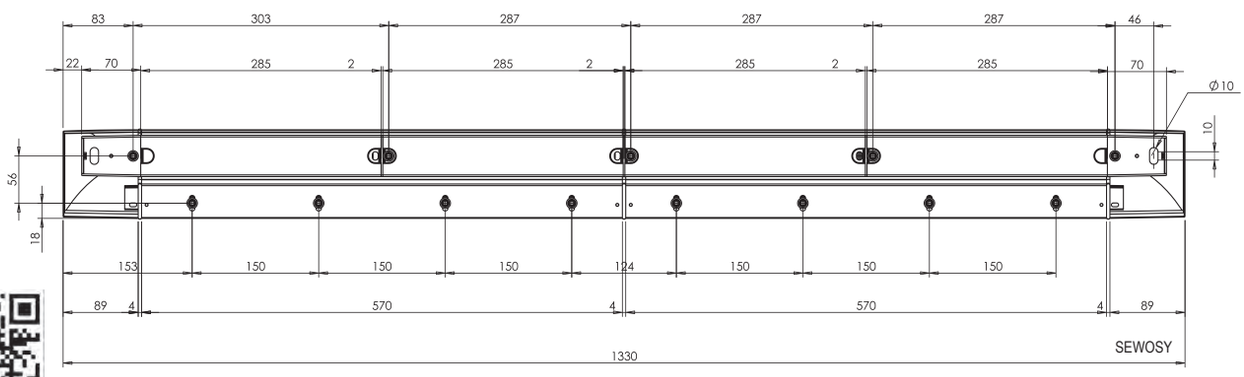

CPREG™-5 ELECTROMAGNETIC HANDLES

2 segments - 2 electromagnetic locks

NF S 61 937 — 24/48 VOLTS DC

Query made
Dossier filed for
24/48V DC

- Modular and discreet
- Plug & Play connection
- Easy storing and transporting
- Consumption of only 1.8 W door locked
- Innovative aesthetics (curved finishing end caps)
- Patented

CPREG-5/S2AS

CHARACTERISTICS

Dimensions H x W x D	CPREG-5/S2		756 x 105 x 67,5 mm
V DC	12-48V DC	ImA DC	see table opposite
°C	-10 +60 °C	IP	42
V/A	125V AC-2 A 30V DC-2 A	DaN	2 x 300*

* Maximal theoretical holding forces, for an implementation meeting the optimum laying conditions

CPREG-5 / 2 electromagnetic locks			
CONSUMPTION			
Voltage	Door without constraint	Door under constraint	Door open
12V DC	250 mA	500 mA	17,5 mA
24V DC	125 mA	272 mA	13,3 mA
48V DC	62 mA	158 mA	12,3 mA

CPREG-5/S2AS	Modular electromagnetic handle CPREG-5 756mm 2x 300DaN 12-48V DC low energy+contact ; nat. anodizing	N.C kg
CPREG-5/S2B	Modular electromagnetic handle CPREG-5 756mm 2x 300DaN 12-48V DC low energy + contact ; mill finish	N.C kg

Customs code
83014019

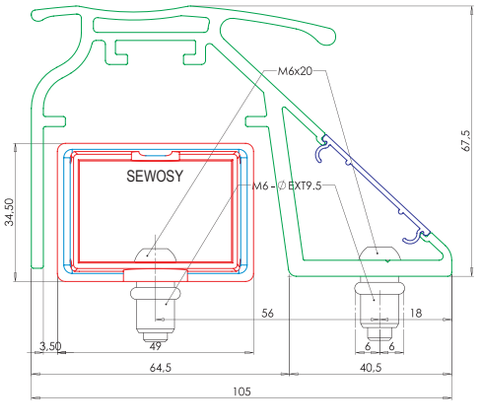

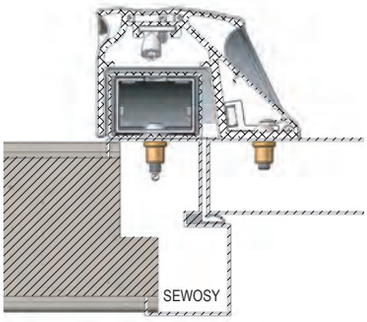

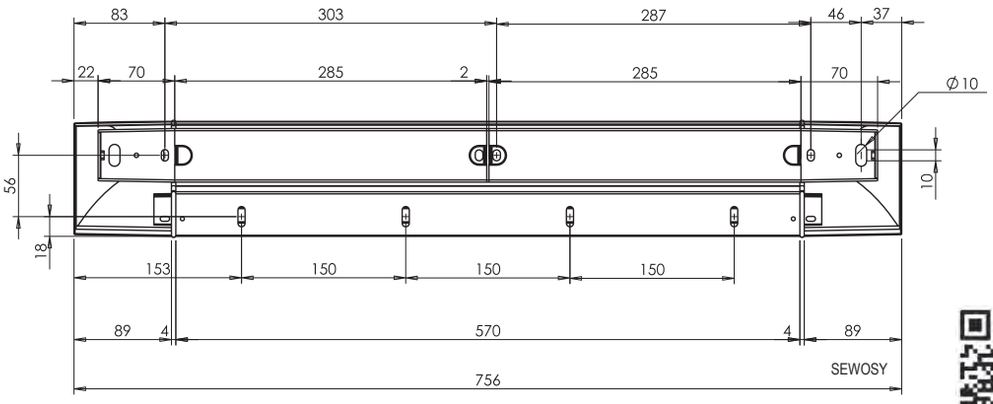

SEWOSY

CPREG™-5 ELECTROMAGNETIC HANDLES - 2 SEGMENTS

CPREG™-5 ELECTROMAGNETIC HANDLES

1 segment - 1 electromagnetic lock

NF S 61 937 — 24/48 VOLTS DC

Query made
Dossier filed for
24/48V DC

- Blend into their environment
- Plug & Play connection
- Easy storing and transporting
- Consumption of only 0.9 W door locked
- Innovative aesthetics (curved finishing end caps)
- Patented

CPREG-5/S1AS

CHARACTERISTICS

Dimensions H x W x D	CPREG-5/S1		469 x 105 x 67,5 mm
V DC	12-48V DC	ImA DC	see table opposite
°C	-10 +60 °C	IP	42
V/A	125V AC-2 A 30V DC-2 A	DaN	300*

* Maximal theoretical holding forces, for an implementation meeting the optimum laying conditions

CPREG-5 / 1 electromagnetic lock			
CONSUMPTION			
Voltage	Door without constraint	Door under constraint	Door open
12V DC	125 mA	250 mA	17,5 mA
24V DC	62,5 mA	136 mA	13,3 mA
48V DC	31 mA	79 mA	12,3 mA

CPREG-5/S1AS	Modular electromagnetic handle CPREG-5 469mm 300DaN 12-48V DC low energy+contact ; nat. anodizing	N.C kg
CPREG-5/S1B	Modular electromagnetic handle CPREG-5 469mm 300DaN 12-48V DC low energy + contact ; mill finish	N.C kg

Customs code
83014019

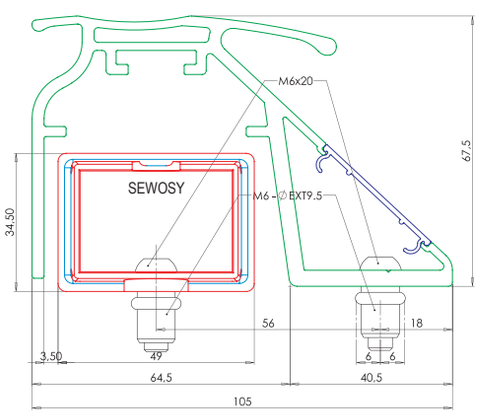

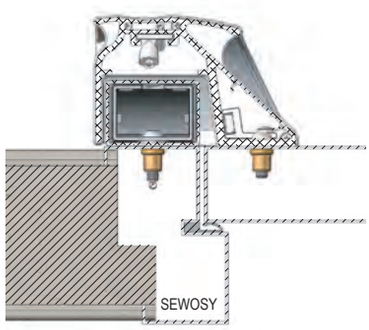

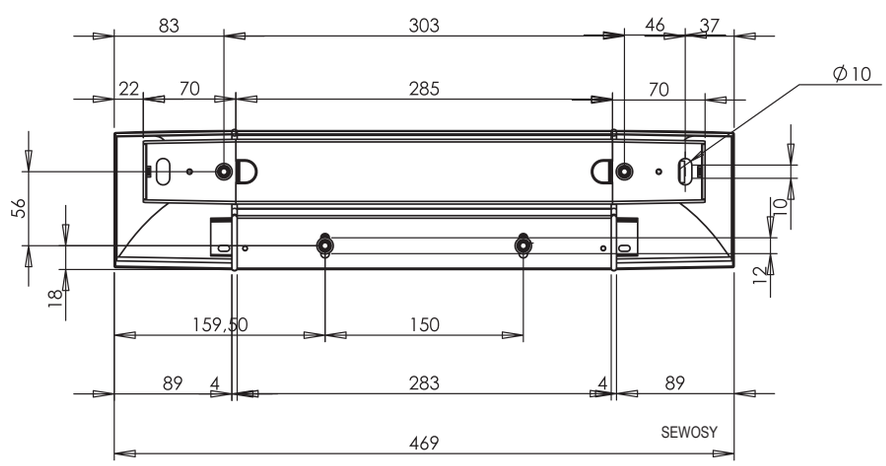

CPREG™-5 ELECTROMAGNETIC HANDLES

kit S2V2 - 2 electromagnetic locks

NF S 61 937 24/48 VOLTS DC

Query made
Dossier filed for
24/48V DC

- Used to add two more electromagnetic locks to CPREG-5
- Plug & Play connection
- Easy storing and transporting
- Patented

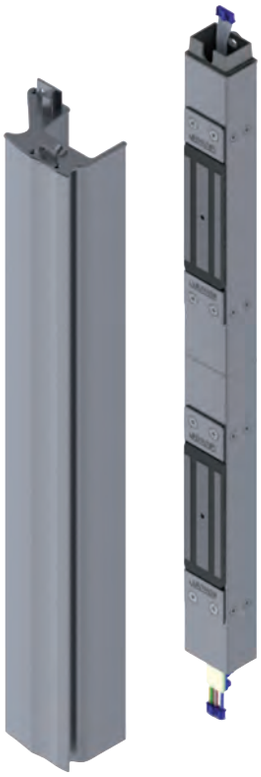

KITCPREG-5/S2V2AS

CHARACTERISTICS

Dimensions H x W x D	KITCPREG-5/S2V2		570 x 105 x 67,5 mm
V DC	12-48V DC	ImA DC	min. : 65 mA max. : 250 mA
°C	-10 +60 °C	IP	42
DaN	2 x 300*		

* Maximal theoretical holding forces, for an implementation meeting the optimum laying conditions

KITCPREG-5/S2V2AS	Extension kit for modular electromagnetic handle CPREG-5 570mm+2 locks 300DAN 12-48V DC; natural anodizing	N.C kg	
KITCPREG-5/S2V2B	Extension kit for modular electromagnetic handle CPREG-5 570mm+2 locks 300DAN 12-48V DC; mill finish	N.C kg	Customs code 83014019

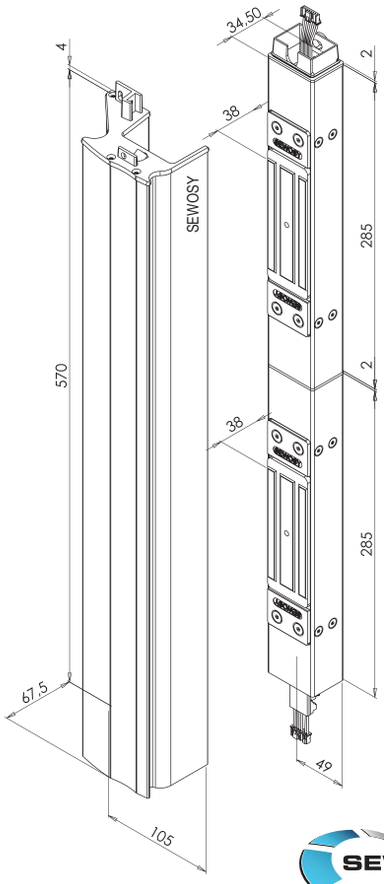

SEWOSY

CPREG™-5 ELECTROMAGNETIC HANDLES

kit S2V1 - 1 electromagnetic lock

NF S 61 937 24/48 VOLTS DC

Query made
Dossier filed for
24/48V DC

- Used to add one more electromagnetic lock to CPREG-5
- Allow to increase the height of CPREG-5
- Plug & Play connection
- Easy storing and transporting
- Patented

KITCPREG-5/S2V1AS

CHARACTERISTICS

Dimensions H x W x D	KITCPREG-5/S2V1		570 x 105 x 67,5 mm
V DC	12-48V DC	ImA DC	min. : 32,5 mA max. : 125 mA
°C	-10 +60 °C	IP	42
DaN	300*		

* Maximal theoretical holding forces, for an implementation meeting the optimum laying conditions

KITCPREG-5/S2V1AS	Extension kit for modular electgromagnetic handle CPREG-5 570mm+1 lock 300DAN 12-48V DC; natural anodizing	N.C kg	
KITCPREG-5/S2V1B	Extension kit for modular electromagnetic handle CPREG-5 570mm +1 lock 300DAN 12-48V DC; mill finish	N.C kg	Customs code 83014019

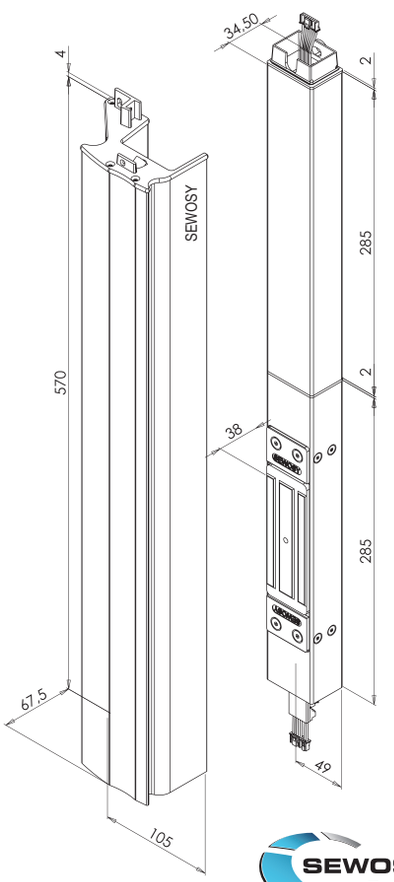

SEWOSY

CPREG™-5 ELECTROMAGNETIC HANDLES

kit S2NU

- Allow to increase the height of CPREG-5
- Plug & Play connection
- Easy storing and transporting
- Patented

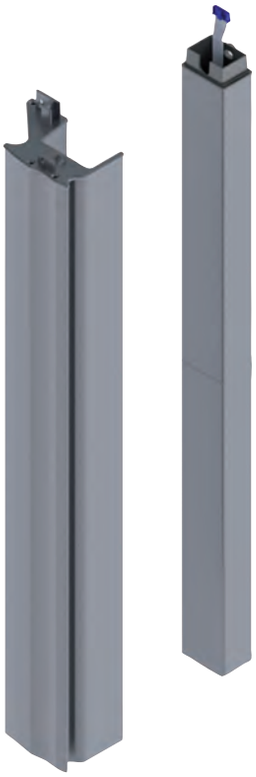

KITCPREG-5/S2NUAS

CHARACTERISTICS

Dimensions H x W x D	KITCPREG-5/S2NU	570 x 105 x 67,5 mm

KITCPREG-5/S2NUAS	Extension kit for modular electromagnetic handle CPREG-5 height 570mm without locks; natural anodizing	N.C kg	
KITCPREG-5/S2NUB	Extension kit for modular electromagnetic handle CPREG-5 height 570mm without locks ; mill finish	N.C kg	Customs code 83014019

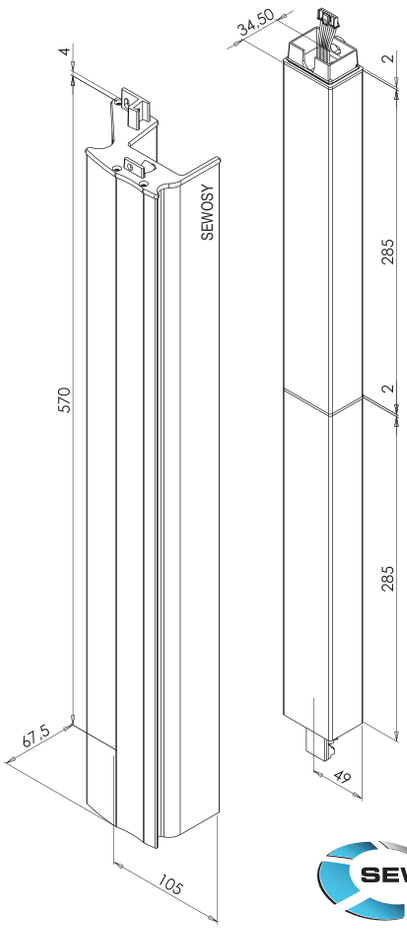

CPREG™-5 ELECTROMAGNETIC HANDLES

kit S1V1- 1 electromagnetic lock

NF S 61 937 24/48 VOLTS DC

Query made
Dossier filed for
24/48V DC

- Used to add one more electromagnetic lock to CPREG-5
- Plug & Play connection
- Easy storing and transporting
- Patented

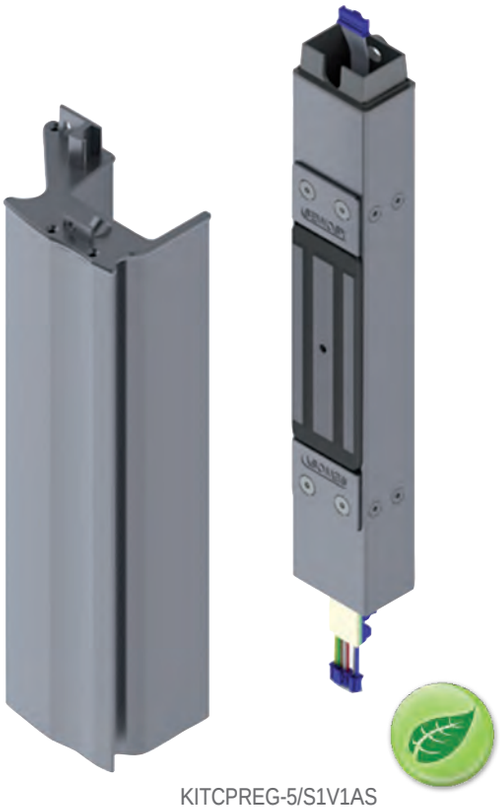

KITCPREG-5/S1V1AS

CHARACTERISTICS

Dimensions H x W x D	KITCPREG-5/S1V1		283 x 105 x 67,5 mm
V DC	12-48V DC	ImA DC	min. : 32,5 mA max. : 125 mA
°C	-10 +60 °C	IP	42
DaN	300*		

* Maximal theoretical holding forces, for an implementation meeting the optimum laying conditions

KITCPREG-5/S1V1AS	Extension kit for modular electromagnetic handle CPREG-5 283mm +1 lock 300DAN 12-48V DC; natural anodizing	N.C kg
KITCPREG-5/S1V1B	Extension kit for modular electromagnetic handle CPREG-5 283mm +1 lock 300DAN 12-48V DC; mill finish	N.C kg

Customs code
83014019

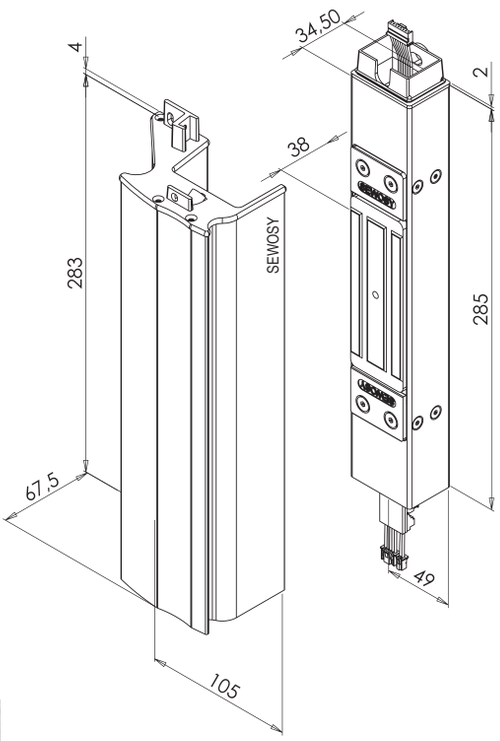

CPREG™-5 ELECTROMAGNETIC HANDLES

kit S1NU

- Allow to increase the height of CPREG-5
- Plug & Play connection
- Easy storing and transporting
- Patented

KITCPREG-5/S1NUAS

CHARACTERISTICS

Dimensions H x W x D	KITCPREG-5/S1NU	283 x 105 x 67,5 mm

KITCPREG-5/S1NUAS	Extension kit for modular electromagnetic handle CPREG-5 height 283mm without locks ; natural anodizing	N.C kg	
KITCPREG-5/S1NUB	Extension kit for modular electromagnetic handle CPREG-5 height 283mm without locks ; mill finish	N.C kg	Customs code 83014019

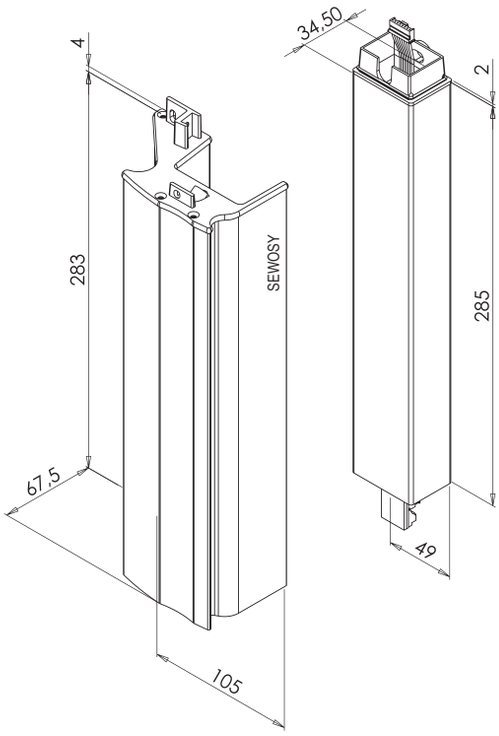

CPREG™-5 ELECTROMAGNETIC HANDLES

spare parts - services

- All RAL colors available (see SEWOSY color chart)
- Fast execution

Powder coating:
On request (*)

POWDER COATING	On request (*) all RAL colors available
NUANCIER	RAL color chart
ANODIZING	On request

Customs code
83014019

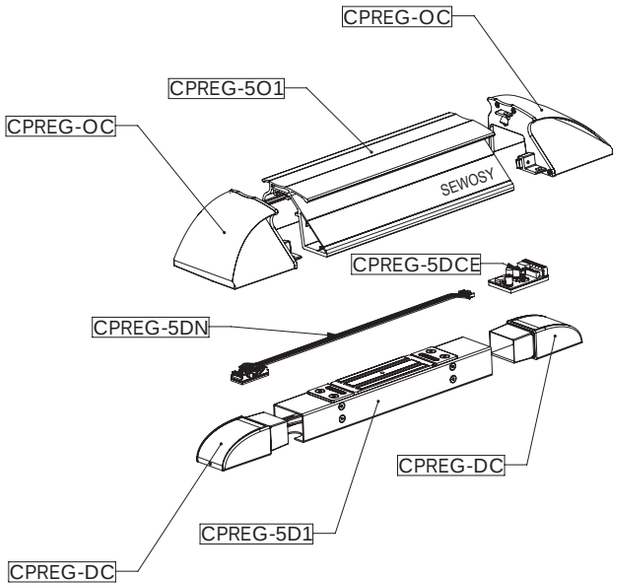

Spare parts:
On request

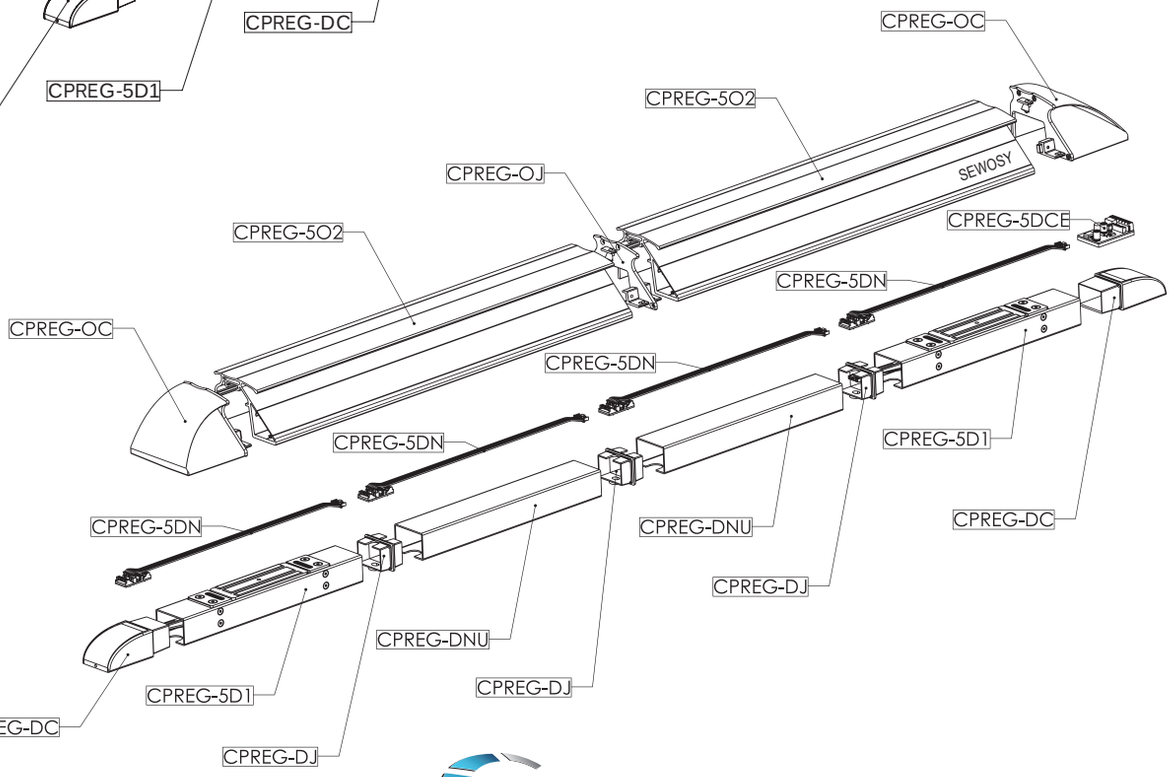

CPREG™ ELECTROMAGNETIC HANDLES

Electromagnetic handles which feed on little energy...

1 Watt = 80 mA in 12V DC

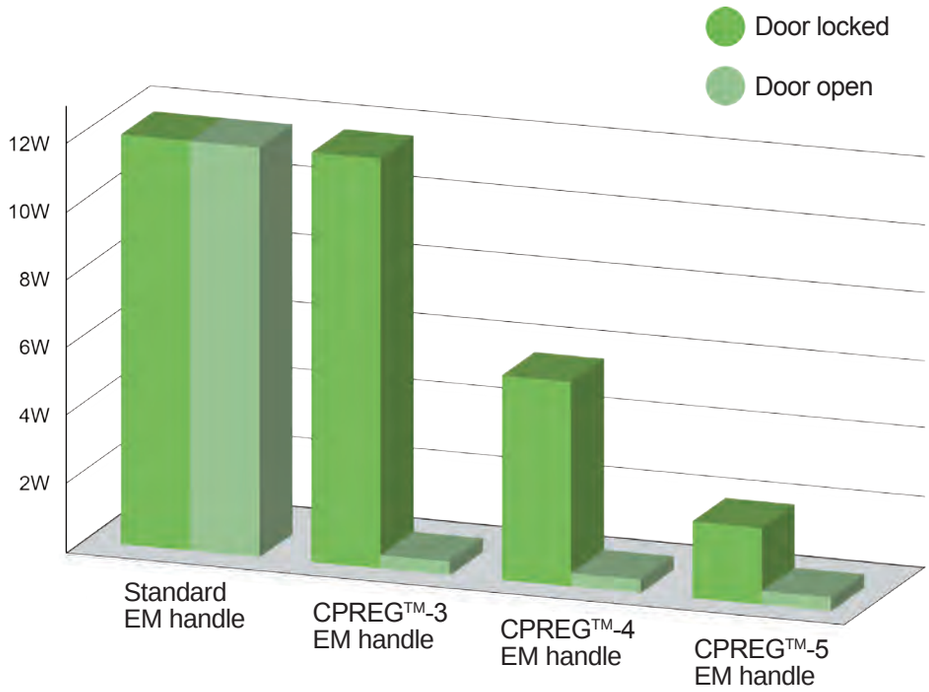

Easy storage and manutention.
Optimized transportation.

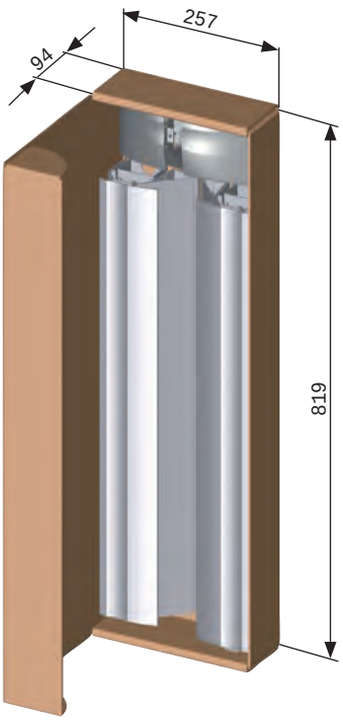

Minimum space for
easy transportation!

The EF200ENC CA electromagnetic locks show an innovative design. Due to their compact dimensions, they have a steadier surface, which ensures the sustainability of the nominal holding force.

Additionally, current consumption is greatly reduced (- 50 %!), while maintaining a locking strength consistent to the announced nominal value.

Worldwide innovation, the EF200ENCCTC CA-BV adapts its consumption according to its use.

When the door is not forced the consumption is at its minimum (0.9 Watts) to guarantee both a secured locking and a very low consumption.

Soon as any restraint is detected, the door strengthens its safety by increasing again its consumption.

This innovation is the ideal compromise between security and respect of environment.

LOW CONSUMPTION ELECTROMAGNETIC LOCKS

300 DaN *

CE

Available 3rd **quarter of 2015**

SIGNIFICANT ENERGY SAVINGS

- **Low or very low consumption (0,9 W - 3W)**
- **Reduced length avoiding surface deformation**
- **Fixing by rear press screw or casing**
- **Locked / unlocked status by HALL contact (CTC model)**
- **Patented**

NF S 61 937 24/48 VOLTS DC

Query made
Dossier filed for 24/48V DC

* Maximal theoretical holding forces, for an implementation meeting the optimum laying conditions

ELECTROMAGNETIC LOCKS

low consumption - fixing by rear press screw

NF S 61 937 — 24/48 VOLTS DC

Query made
Dossier filed for
24/48V DC

- Low consumption (3 Watts)
- Reduced length avoiding an area deformation
- Rear cylinder fixing
- Locked / unlocked status by HALL contact (CTC model)

EF200ENC CA

CHARACTERISTICS

Dimensions H x W x D		Electromagnet Armature plate	43 x 141 x 26 mm 43 x 110 x 11 mm - M6
V DC	12-48V DC	ImA DC	see table opposite
°C	-10 +60 °C	IP	42
V/A	125V AC-2 A 30V DC-2 A	DaN	300*

* Maximal theoretical holding forces, for an implementation meeting the optimum laying conditions

EF200ENC CA / EF200ENCCTC CA			
CONSUMPTION			
Voltage	Door without constraint	Door under constraint	
12V DC		250 mA	
24V DC		125 mA	
48V DC		62,5 mA	

EF200ENC CA	Mortise electromagnetic lock 300 DaN 12-48V DC low consumption	0,8 kg	
EF200ENCCTC CA	Mortise electromagnetic lock 300 DaN 12-48V DC low consumption + hall contact	0,8 kg	Customs code 83014019

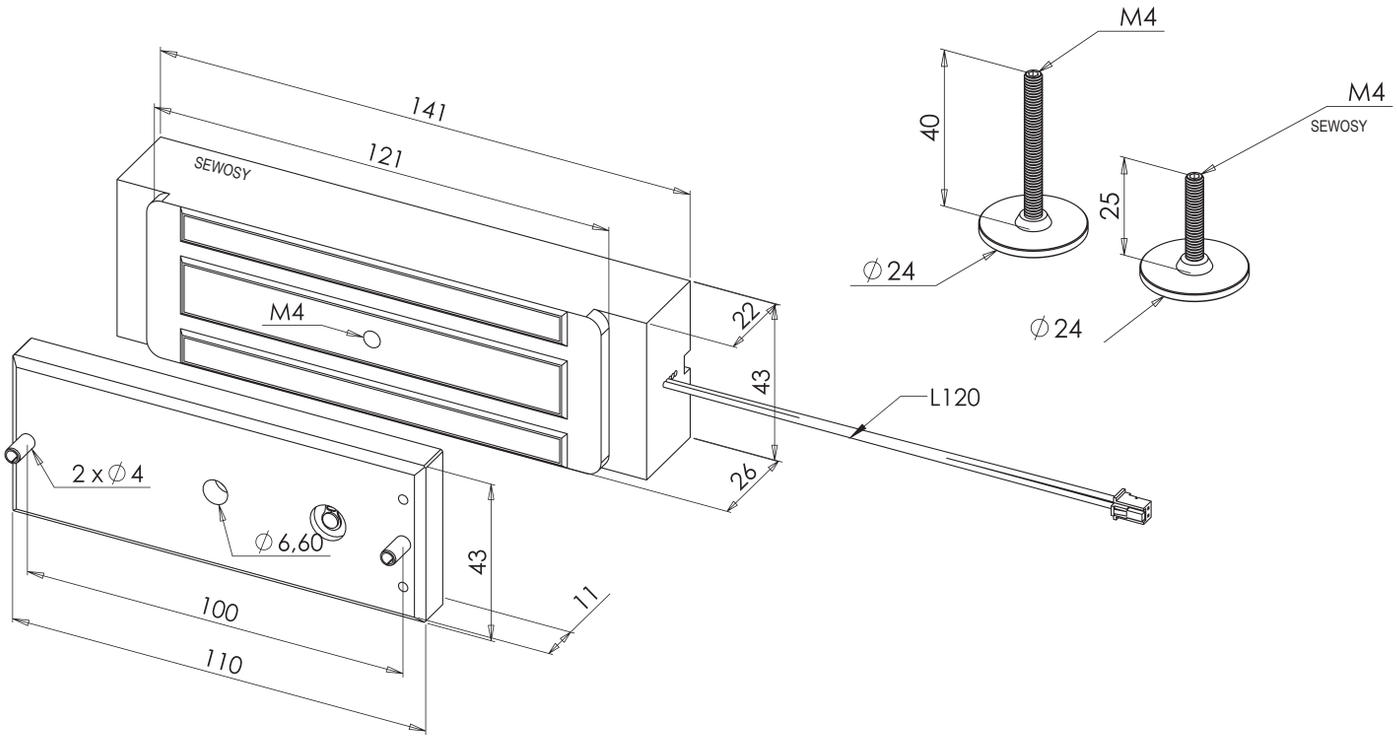

LOW CONSUMPTION ELECTROMAGNETIC LOCKS

ELECTROMAGNETIC LOCKS

low consumption - fixing by casing

NF S 61 937 — 24/48 VOLTS DC

Query made
Dossier filed for
24/48V DC

- Low consumption (3 Watts)
- Reduced length avoiding an area deformation
- Fixing by casing
- Locked / unlocked status by HALL contact (CTC model)

EF200ENC CA-B

CHARACTERISTICS

Dimensions H x W x D		Electromagnet Armature plate	43 x 190 x 32,9 mm 43 x 110 x 11 mm - M6
V DC	12-48V DC	ImA DC	see table opposite
°C	-10 +60 °C	IP	42
V/A	125V AC-2 A 30V DC-2 A	DaN	300*

* Maximal theoretical holding forces, for an implementation meeting the optimum laying conditions

EF200ENC CA-B / EF200ENCCTC CA-B			
CONSUMPTION			
Voltage	Door without constraint	Door under constraint	
12V DC		250 mA	
24V DC		125 mA	
48V DC		62,5 mA	

EF200ENC CA-B	Mortise electromagnetic locks 300 DaN 12-48V DC + casing low consumption	0,8 kg	
EF200ENCCTC CA-B	Mortise electromagnetic locks 300 DaN 12-48V DC + casing low consumption + contact HALL	0,8 kg	Customs code 83014019

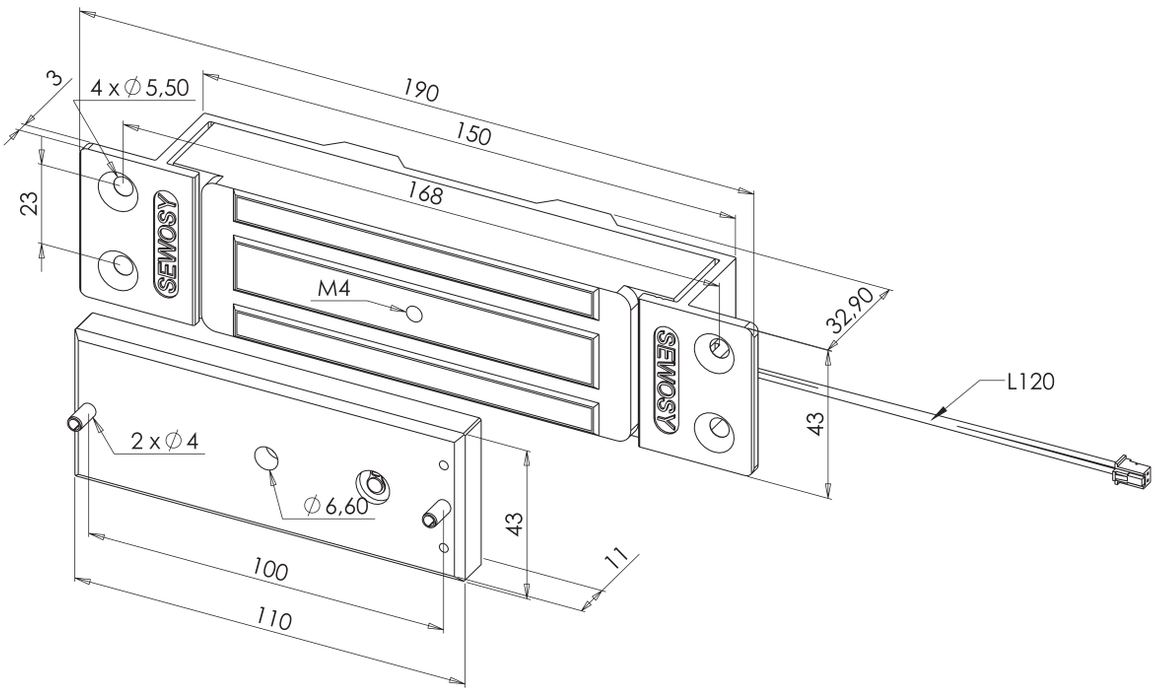

LOW CONSUMPTION ELECTROMAGNETIC LOCKS

ELECTROMAGNETIC LOCKS

very low consumption - fixing by casing

NF S 61 937 24/48 VOLTS DC

Query made
Dossier filed for
24/48V DC

- Very low consumption (0.9 Watts)
- Reduced length avoiding an area deformation
- Fixing by casing
- Locked / unlocked status by HALL contact
- Patented

EF200ENCCTC CA-BV

CHARACTERISTICS

Dimensions H x W x D		Electromagnet Armature plate	43 x 190 x 32,9 mm 43 x 110 x 11 mm - M6
V DC	12-48V DC	ImA DC	see table opposite
°C	-10 +60 °C	IP	42
V/A	125V AC-2 A 30V DC-2 A	DaN	300*

* Maximal theoretical holding forces, for an implementation meeting the optimum laying conditions

EF200ENCCTC CA-BV			
CONSUMPTION			
Voltage	Door without constraint	Door under constraint	
12V DC	75 mA	250 mA	
24V DC	37,5 mA	125 mA	
48V DC	18,75 mA	62,5 mA	

EF200ENCCTC CA-BV	Mortise electromagnetic locks 300 DaN 12-48V DC adaptive very low consumption + contact HALL	0,8 kg	Customs code 83014019

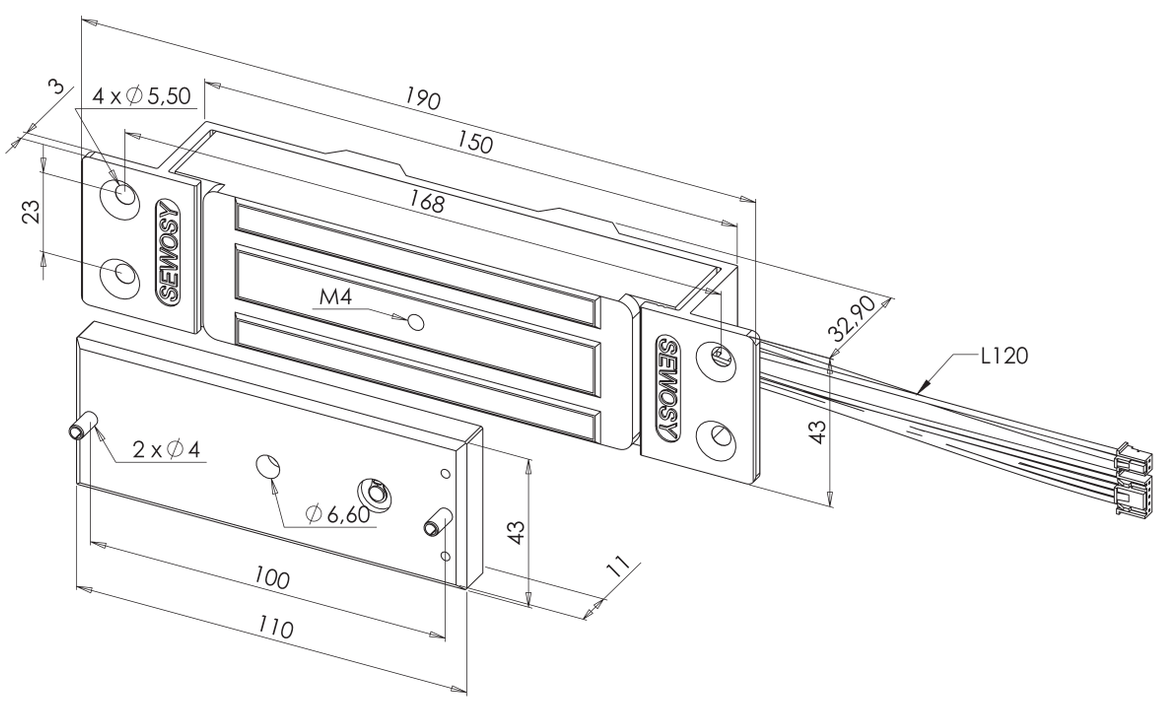

SEWOSY

ELECTROMAGNETIC LOCKS

low consumption

CONSUMPTIONS

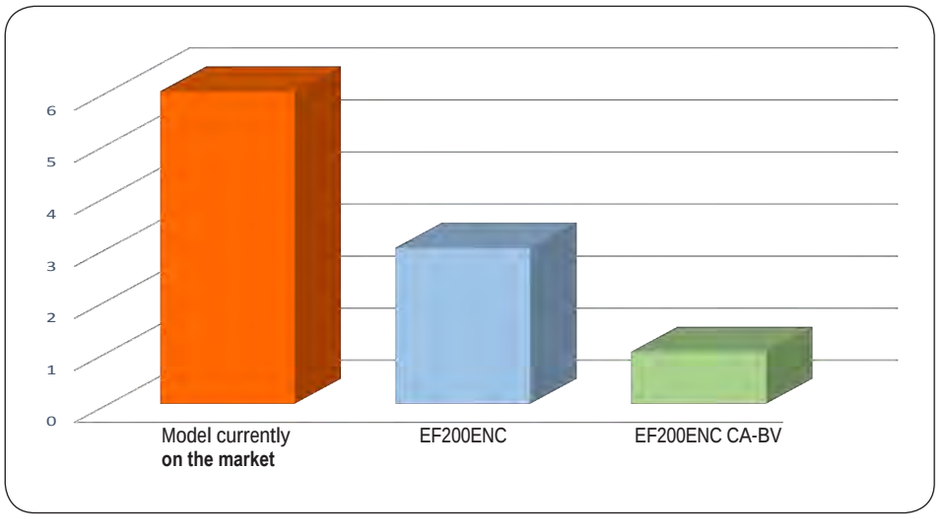

IMPACT ON THE PRODUCT LIFE CYCLE ENVIRONMENT

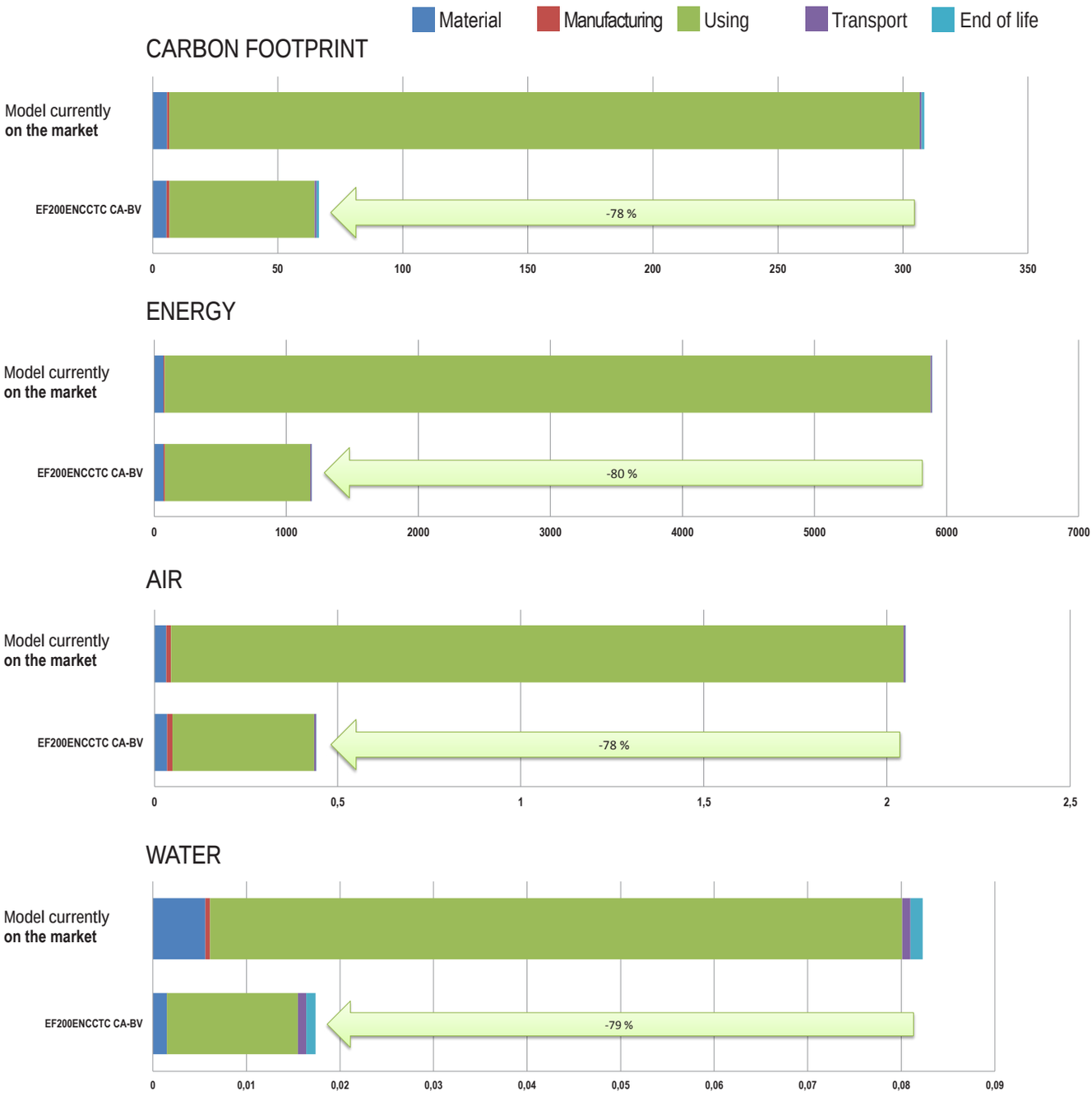

The round electromagnetic locks from VR series are especially suitable for installation on rising barriers and on access to industrial buildings. Benefiting from a significant holding force in view of their compact dimensions, these electromagnetic locks offer one of the best possible compromises in terms of space and resistance.

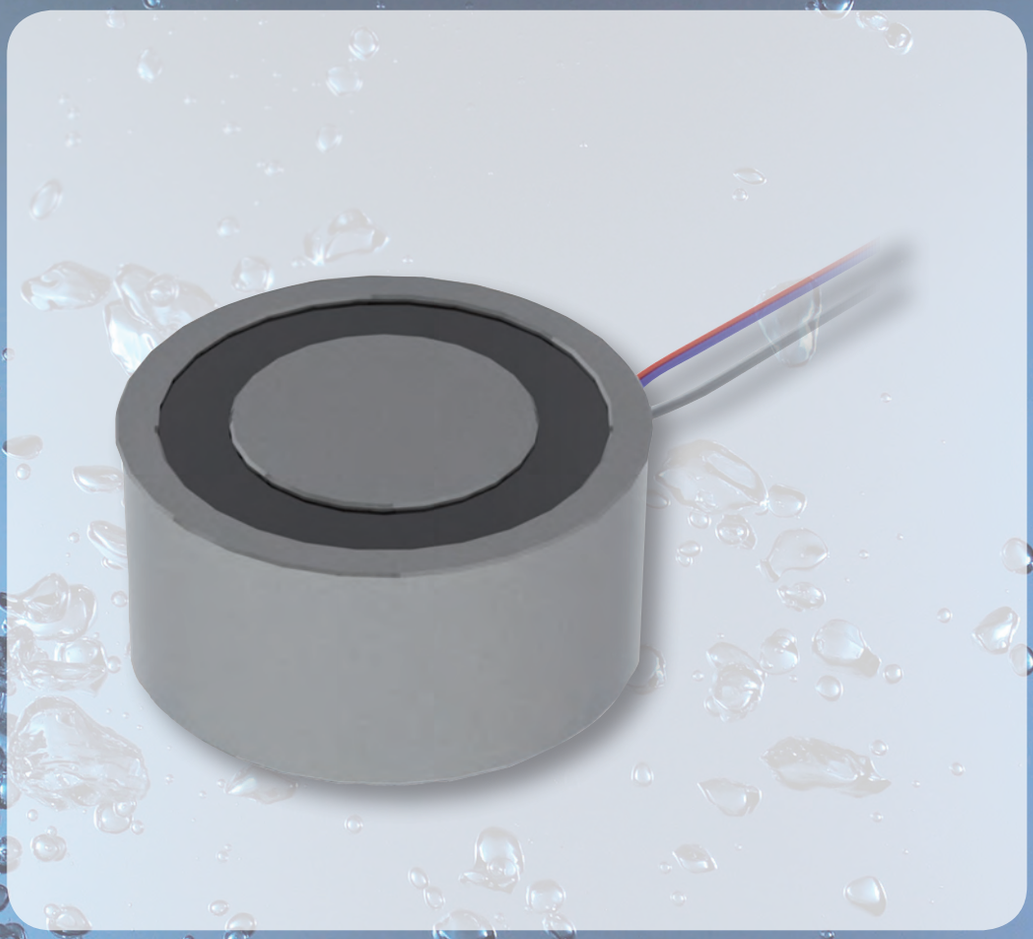

VELMAG™ ROUND ELECTROMAGNETIC LOCKS VR SERIES

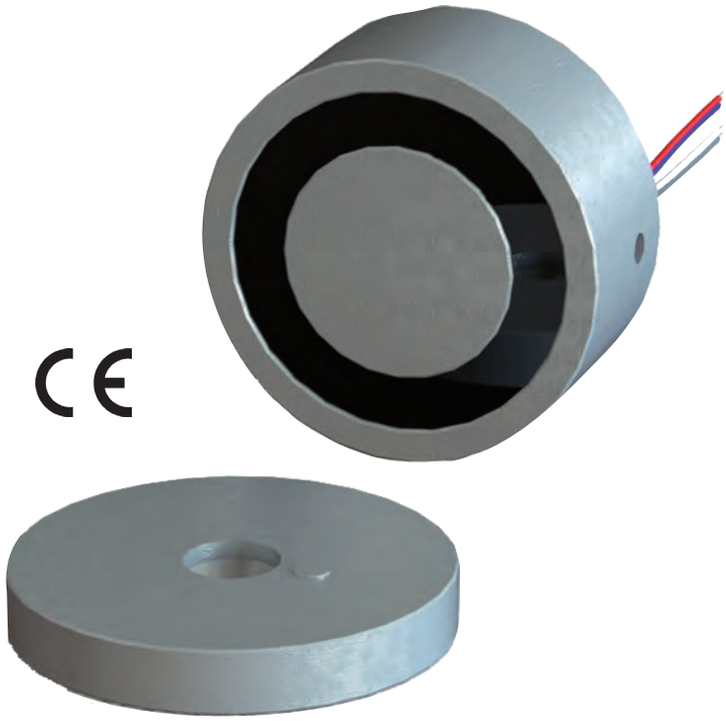

200 DaN *

CE

* Maximal theoretical holding forces, for an implementation meeting the optimum laying conditions

- **Dual voltage 12-24V DC**
- **Rear or sideway cable exit**
- **Rear fixing**
- **Anti-remanence device by ejector**

VELMAG™ ROUND ELECTROMAGNETIC LOCKS

VR series

- Dual voltage 12/24V DC
- Rear or side wire output
- Rear fixing
- Anti-remanence device by ejector

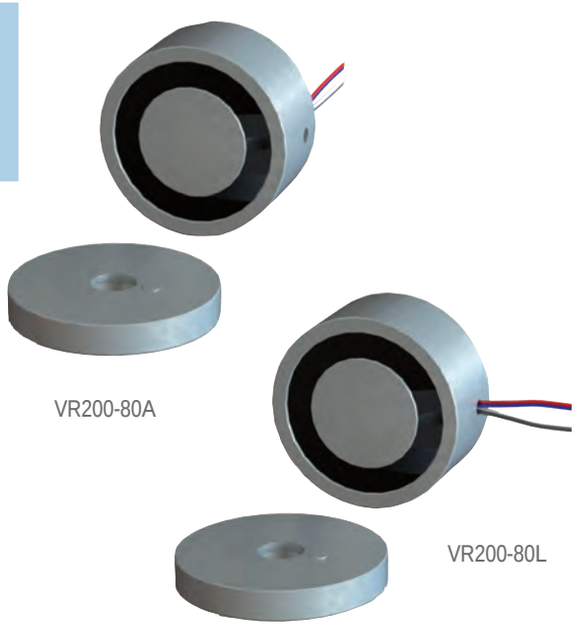

CHARACTERISTICS

Dimensions H x W x D	Electromagnet Armature plate		80 X 38 mm 80 x 12 mm
V DC	12-24V DC	ImA DC	420-210 mA
°C	-10°C +55°C	IP	67
DaN	200*		

* Maximal theoretical holding forces, for an implementation meeting the optimum laying conditions

VR200-80A	Round electromagnetic lock 210 DaN 12/24V DC (rear cable exit) Diam. 80mm	1,2 kg	
VR200-80L	Round electromagnetic lock 200 DaN 12/24V DC (sideway cable exit) Diam. 80mm	1,2 kg	Customs code 83014019

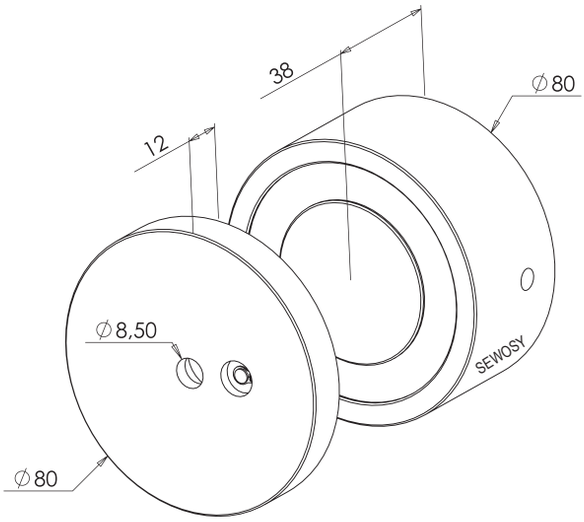

ELECTRIC DROPBOLTS

- Information of gate detection
- Status or position contact
- Adjustable time delay
- Various types of mounting and doors (depending on models)
- Unlocking by European cylinder (SPP1TCY35 model)

DOOR LOCKS

electric dropbolt - fail secure (power to open)

- Unlocking by European cylinder
- Accurate setting for closed door detection
- Adjustable time delay
- Easy adjustment
- Axis at 35 mm

SPP1TCY35

CHARACTERISTICS

Dimensions H x W x D	Lock Face plate		260 x 30 x 48 mm 100 x 30 x 3 mm
V DC	12-24V DC	ImA DC	1 A max.
°C	-10 +60 °C	T s	1,5 - 9 s

SPP1TCY35	Dropbolt time delay fail secure 12-24V DC backset 35 mm	1,32 kg	Customs code 83014019

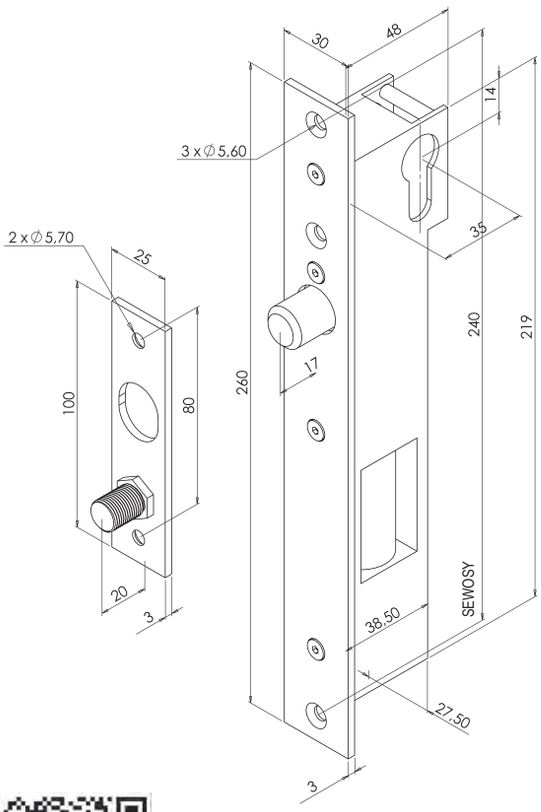

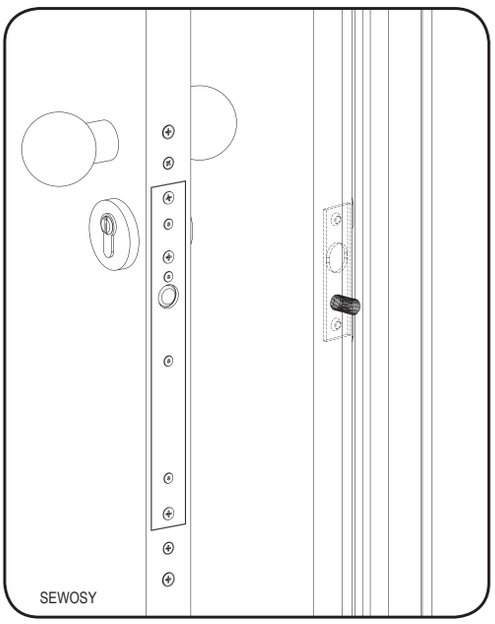

DOOR LOCKS

electric dropbolt - fail safe (power to lock)

- Door positionning device by adjustable ball
- Locked / unlocked status sensor
- Adjustable time delay
- Horizontal or vertical mounting
- For single or double action door

SPP3TCB

CHARACTERISTICS

Dimensions H x W x D	Lock Face plate		262 x 35 x 41 mm 115 x 25 x 3 mm
V DC	12V DC	ImA DC	900-300 mA
°C	-10 +60 °C	T s	0 - 9 s
V/A	30V DC-3 A		

SPP3TCB	Dropbolt time delay fail safe contact 12V DC with positioning assistance	1.18 kg	Customs code 83014019

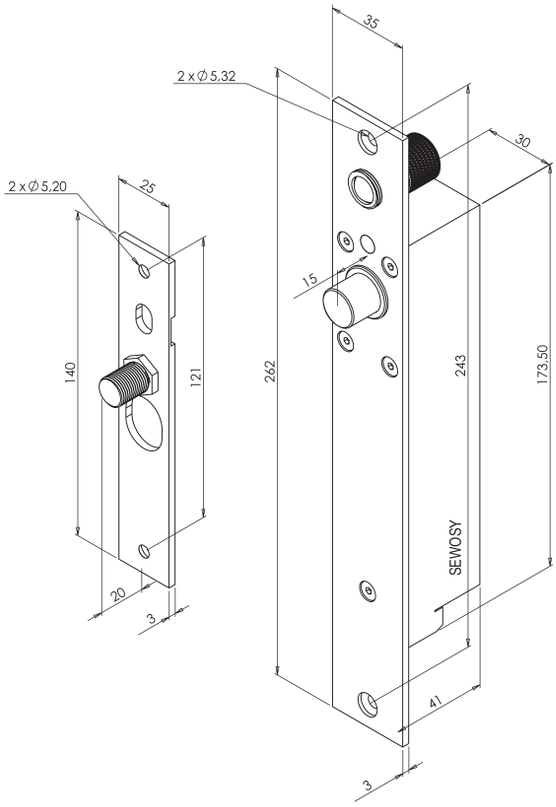

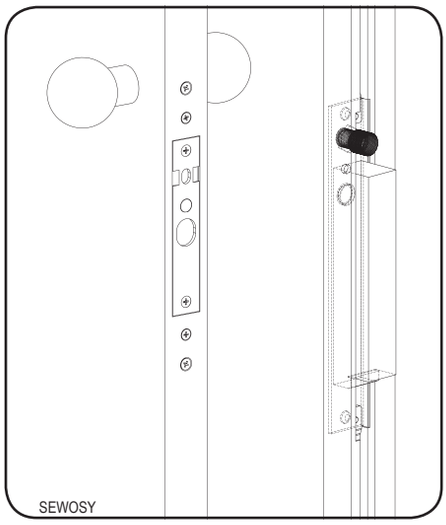

DOOR LOCKS

electric dropbolts - fail safe (power to lock)

- Suitable for narrow profiles
- Mortised or surface-mounting (housing as an option)
- Open or closed door position sensor
- Locked or unlocked door status sensor
- Adjustable time delay

SPP3T2C

CHARACTERISTICS

Dimensions H x W x D	Lock Face plate		210 x 25 x 41 mm 140 x 30 x 3 mm
V DC	12V DC 24V DC	ImA DC	900-300 mA 450-100 mA
°C	-10 +60 °C	T s	0 - 9 s
V/A	position: 30V DC-0,25 A status: 30V DC-3 A		

SPP3T2C	Dropbolt time delay fail safe 2 contacts 12-24V DC narrow design	0.66 kg	
SPP3T2C-AP	Surface housing for SPP3T2C (2 pcs)	0.84 kg	Customs code 83014019

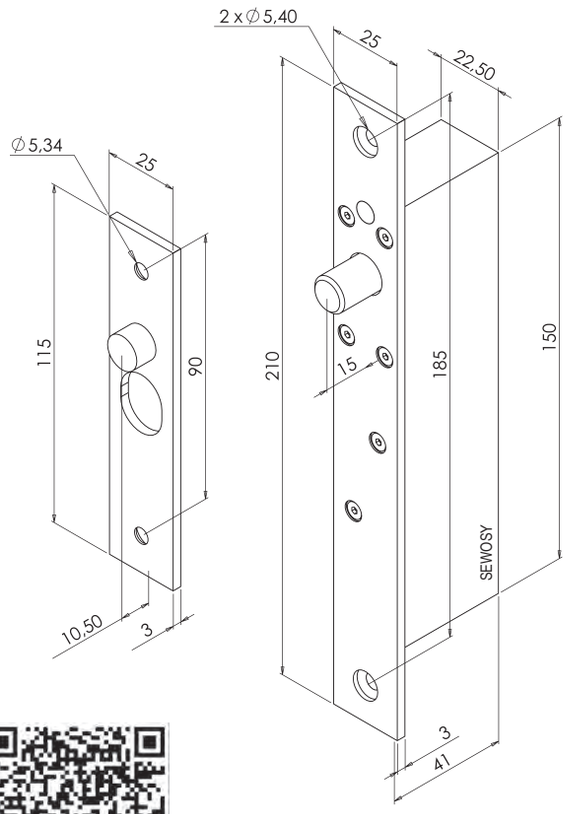

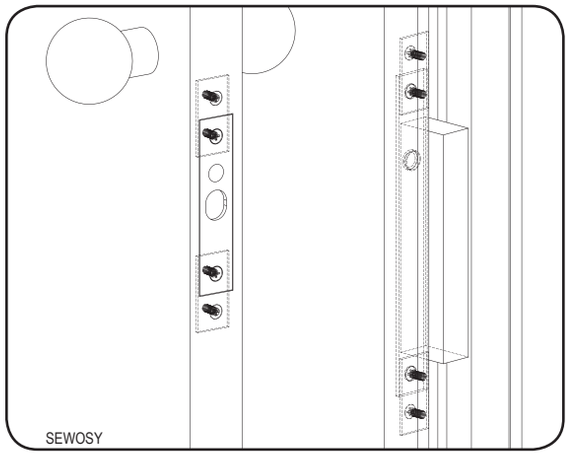

DOUBLE ACTION LOCKS

- Fail-secure or fail-safe
- Detection of closed door by mechanical probe
- Locked / unlocked status contact
- For simple or double acting doors
- Possible unlocking by cylinder

DOOR LOCKS

double action lock

- Fail secure or fail safe
- Closed door detection by mechanical probe
- Locked or unlocked door status sensor
- For single or double action door

SPDBC13

CHARACTERISTICS

Dimensions H x W x D	Lock Face plate		210 x 25 x 44 mm 150 x 30 x 3 mm
V AC/DC	12-24V AC/DC	ImA AC/DC	280-180 mA
°C	-10 +60 °C	V/A	125V AC-3 A

SPDBC13	Double action lock + contact fail safe / fail secure 12-24V AC/DC	0.82 kg	Customs code 83014019

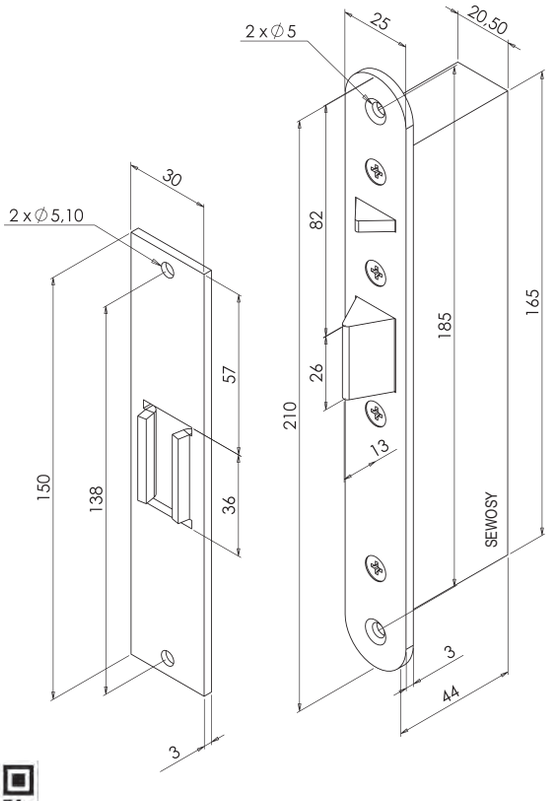

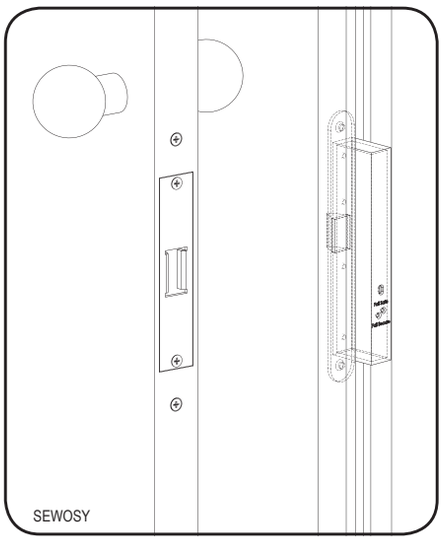

DOOR LOCKS

double action bolt lock

- Fail secure or fail safe
- Closed door detection by mechanical probe
- Locked or unlocked door status sensor
- Unlocking by cylinder
- For single or double action door

SPDBC13CY30

CHARACTERISTICS

Dimensions H x W x D	Lock Face plate simple action Face plate double action		275 x 25 x 49 mm 150 x 30 x 1,5 mm 150 x 50 x 1,5 mm
V AC/DC	12-24V AC/DC	ImA AC/DC	280-180 mA
°C	-10 +60 °C	V/A	125V AC-3 A

SPDBC13CY30	Double action bolt lock + contact fail safe / fail secure 12-24V AC/DC backset 30 mm	1.16 kg	Customs code 83014019

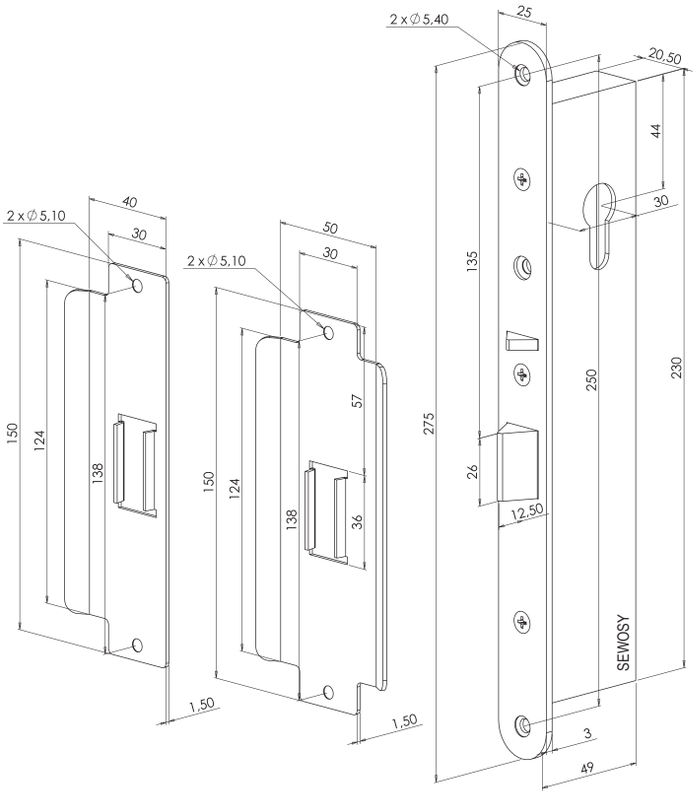

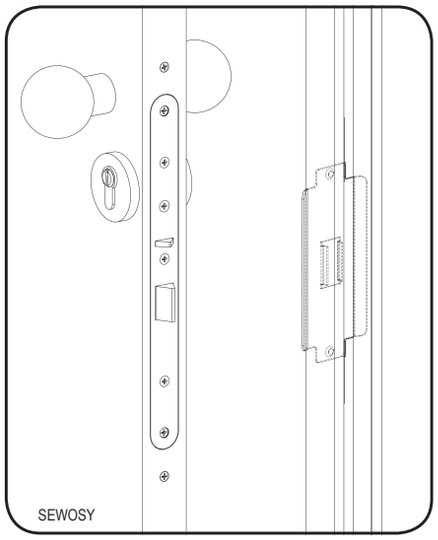

The CEB200 compact electromagnetic bolt is appropriate for the locking of all kinds of lockers and / or drawers in which some objects must be protected against vandalism. Its reduced dimensions and its frontal or side operation make it a master complementary to lock the small openings with a maximum security. This "all in one" product which runs as well with emission or cut of current, in 12 or 24V DC, also enables monitoring of openings state thanks to its embedded contacts.

Mounting of the CEB200 on sliding door

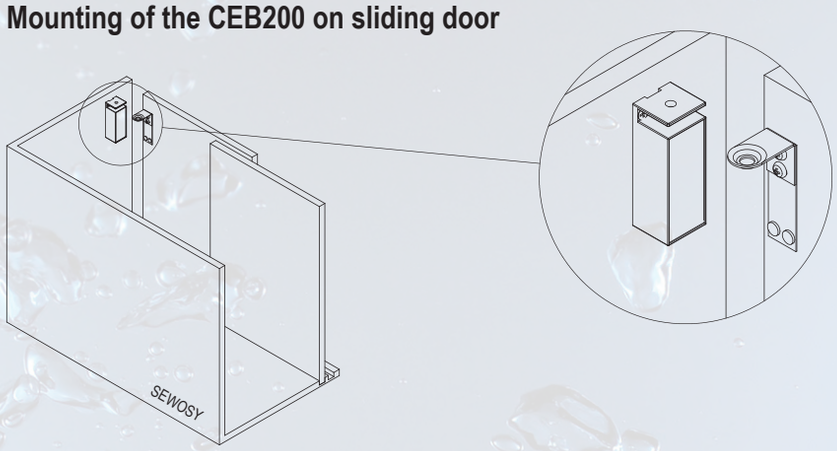

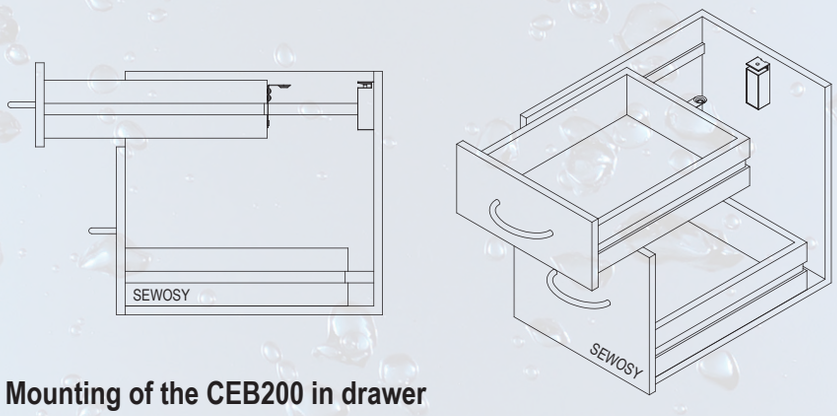

Mounting of the CEB200 in drawer

COMPACT ELECTRO-MAGNETIC BOLT CEB200

200 DaN *

* Maximal theoretical holding forces, for an implementation meeting the optimum laying conditions

- **Fail-secure or fail-safe**
- **Dual voltage 12/24V DC**
- **Mounting on swinging or sliding doors**
- **Position contact open / closed door**
- **Status contact locked / unlocked door**

COMPACT ELECTROMAGNETIC BOLT

CEB200

- Fail secure or fail safe
- Dual voltage 12/24V DC
- Mounting on swinging or sliding doors
- Open / closed door position sensor
- Locked or unlocked door status sensor

CEB200

CHARACTERISTICS

Dimensions H x W x D	Verrou Contrepartie	82 x 30 x 27,80 mm 73,40 x 21,60 x 33 mm	
V DC	12-24V DC	ImA DC	300-150 mA
IP	42	DaN	200*
V/A	position: 30V AC/DC-0,5 A status: 125V AC-3 A		

* Maximal theoretical holding forces, for an implementation meeting the optimum laying conditions

CEB200	Compact electromagnetic bolt fail safe / fail secure - 12-24V DC 2 contacts - 200 DaN	0.2 kg	Customs code 83014019

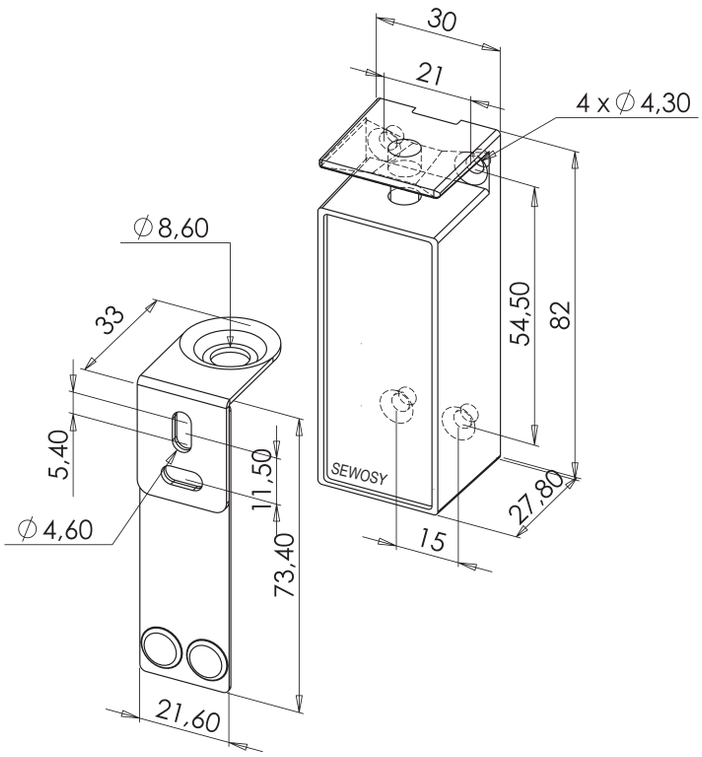

ACCESS CONTROL

ACCESS CONTROL

STAND-ALONE KEYPADS.....203

K1000 AND KN1000 KEYPADS..... 204

STAND-ALONE PROXIMITY READERS 205

KR1000 AND KRN1000 PROXIMITY READERS - MARIN..... 206
KR1000-M PROXIMITY READER - MIFARE 207
KR1000-W PROXIMITY READER WIEGAND OUTPUT WITH KEYPAD..... 208
LP-W PROXIMITY READER WIEGAND OUTPUT 209
INSTALLATIONS EXAMPLES..... 210

PROXIMITY CARDS AND KEYFOBS.....215

ISO PROXIMITY CARDS..... 216
MULTITECHNOLOGY PROXIMITY CARDS..... 218
PROXIMITY KEYFOBS 219
ACCESSORIES 221
SERVICES 222

STAND-ALONE KEYPADS

CE

1010

STAND-ALONE KEYPADS

K1000 and KN1000

- Suitable for narrow profiles (KN1000 model)
- Blue backlighted metal keys
- Easy programming
- 3 meters cable
- Push button and door contact input

K1000

KN1000

CHARACTERISTICS

Dimensions H x W x D	K1000 KN1000	120 x 76 x 28 mm 165 x 45 x 22 mm	
V AC/DC	12-24V AC/DC	ImA AC/DC	110 mA
°C	-10 +60 °C	IP	65
V/A	2 relays 125V AC /0,5 A - 30V DC /2 A	T s	0 - 99 s bistable function

K1000	Keypad 2 relays 1010 users 12/24V AC/DC	0,72 kg	
KN1000	Narrow keypad 2 relays 1010 users 12/24V AC/DC	0,66 kg	Customs code 85437090

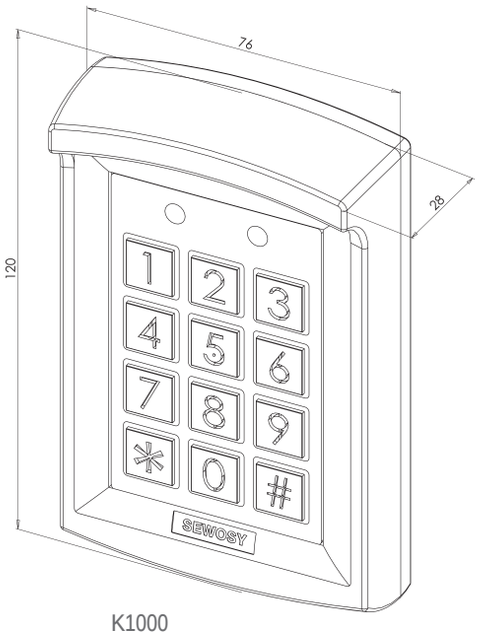

K1000

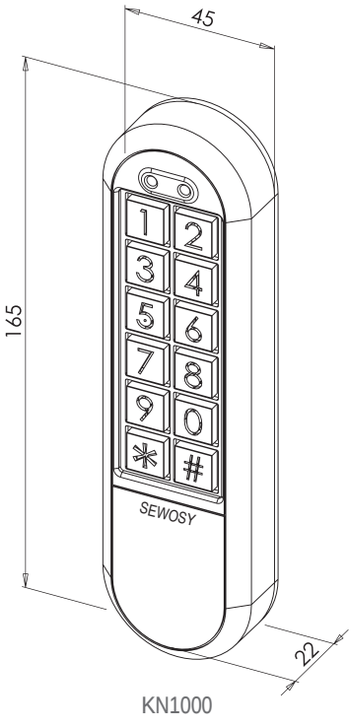

KN1000

STAND-ALONE PROXIMITY READERS

CE

- Keypad or stand-alone keypad reader (Marin or Mifare)
- Suitable for narrow profiles (KN1000 and KRN1000 models)
- Metal keys backlighted in blue
- Easy programming
- 3 meters of cable
- Push button and door contact input

KR1000 AND KRN1000 PROXIMITY READERS

125 kHz - MARIN

- Integrated proximity reader EM4200 125 kHz
- Suitable for narrow profiles (KRN1000 model)
- Blue backlighted metal keys
- Easy programming
- 3 meters cable
- Push button and door contact input

KR1000

KRN1000

396ISO1EM1

396SHEM1

CHARACTERISTICS

Dimensions H x W x D	KR1000 KRN1000 396ISO1EM1 396SHEM1	120 x 76 x 28 mm 165 x 45 x 22 mm 54 x 85,6 x 0,80 mm 56,6 x 32 x 8,2 mm	
V AC/DC	12-24V AC/DC	ImA AC/DC	110 mA
°C	READERS -10 +60 °C 396ISO1EM1 -20 +60 °C 396SHEM1 -30 +65 °C	IP	65 67 66
V/A	2 RELAYS 125V AC /0,5 A - 30V DC /2 A		0 - 99 s bistable function

KR1000	Proximity reader with programming keypad and integrated antenna 12/24V AC/DC - 125kHz	0,72 kg	
KRN1000	Narrow proximity reader with programming keypad 12/24V AC/DC - 125kHz	0,66 kg	Customs code 85437090
396ISO1EM1	Proximity ISO card EM4200 125 kHz	0,005 kg	
396SHEM1	Proximity keyfob Shark EM4200 125 kHz	0,007 kg	Customs code 85235290

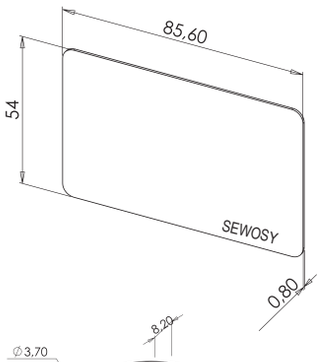

396ISO1EM1

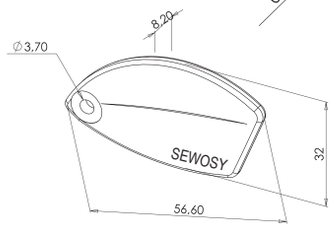

396SHEM1

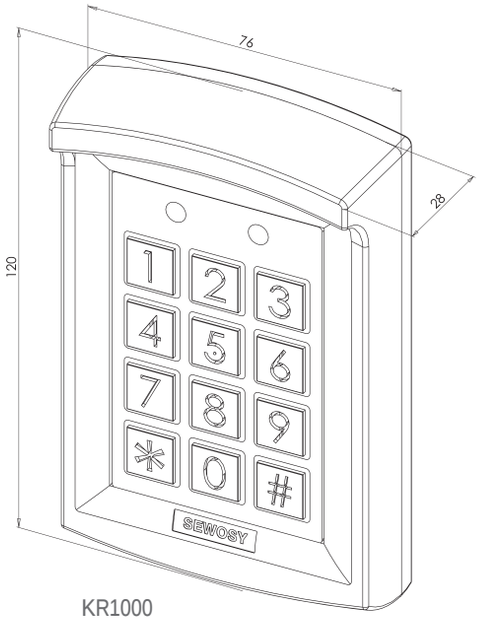

KR1000

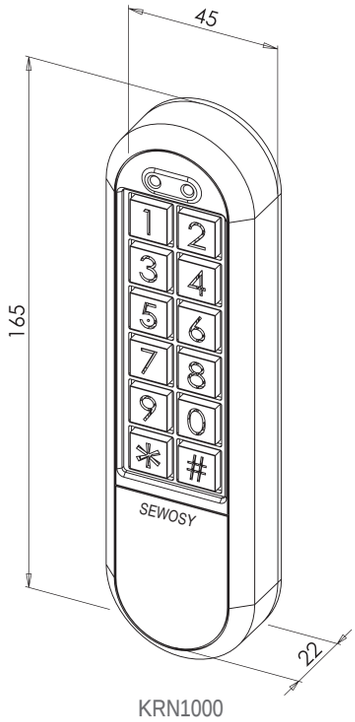

KRN1000

KR1000-M PROXIMITY READER

13,56 MHz - MIFARE

- Integrated proximity reader MIFARE 13,56 MHz
- Blue backlighted metal keys
- Easy programming
- 3 meters cable
- Push button and door contact input

KR1000-M

396ISO1MF1

396P1MF1

CHARACTERISTICS

Dimensions H x W x D	KR1000-M 396ISO1MF1 396P1MF1	122,5 x 78,5 x 22,5 mm 54 x 85,6 x 0,80 mm 36,4 x 30 x 7,1 mm	
V AC/DC	12-24V AC/DC	ImA AC/DC	110 mA
°C	READER -10 +60 °C 396ISO1MF1 -20 +60 °C 396P1MF1 -15 +60 °C	IP	65 67 66
V/A	2 RELAYS 125V AC /0,5 A - 30V DC /2 A 125V AC /0,5 A - 30V DC /2 A		0 - 99 s bistable function

KR1000-M	Proximity reader with programming keypad and integrated antenna 12/24V AC/DC - Mifare 13.56 mHz	0,72 kg	Customs code 85437090
396ISO1MF1	Proximity ISO card Philips Mifare 1k 13,56 MHz	0,005 kg	
396P1MF1	Proximity keyfob P1 Philips Mifare 1k 13,56MHz	0,003 kg	Customs code 85235290

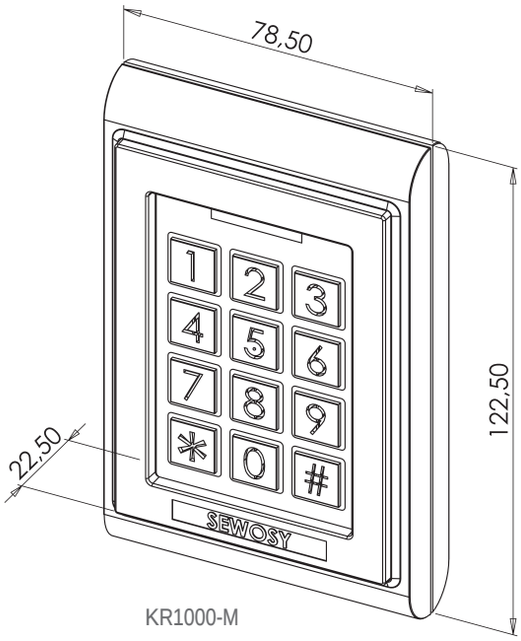

KR1000-M

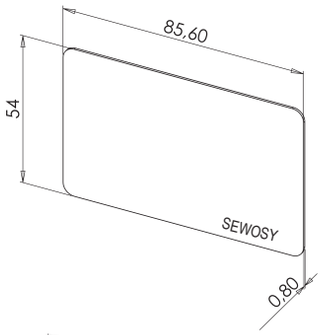

396ISO1MF1

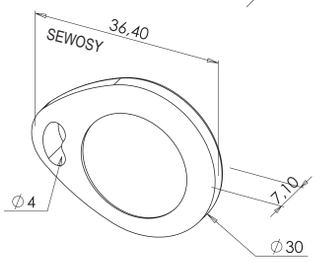

396P1MF1

KR1000-W PROXIMITY READER

with keypad - WIEGAND output

- Output Wiegand 26 bits
- Integrated keypad and proximity reader EM4200 125 kHz
- Blue backlighted metal keys
- 3 meters cable

KR1000-W

CHARACTERISTICS

Dimensions H x W x D	KR1000-W 396ISO1EM1 396SHEM1	120 x 76 x 28 mm 54 x 85,6 x 0,80 mm 56,6 x 32 x 8,2 mm	
V AC/DC	12-24V AC/DC	ImA AC/DC	110 mA
°C	READER 396ISO1EM1 396SHEM1	-10 +60 °C -20 +60 °C -30 +65 °C	IP 65 67 66

396ISO1EM1

396SHEM1

KR1000-W	Proximity reader with programming keypad 12/24V AC/DC-125kHz-Wiegand 26 bits	0,66 kg	Customs code 85437090
396ISO1EM1	Proximity ISO card EM4200 125 kHz	0,005 kg	
396SHEM1	Proximity keyfob Shark EM4200 125 kHz	0,007 kg	Customs code 85235290

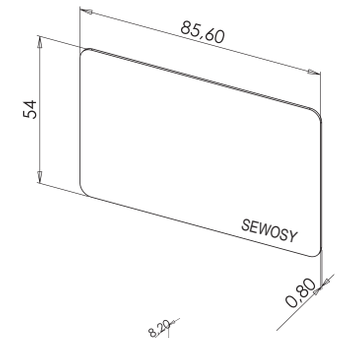

396ISO1EM1

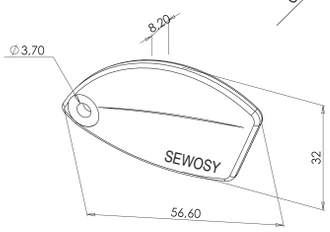

396SHEM1

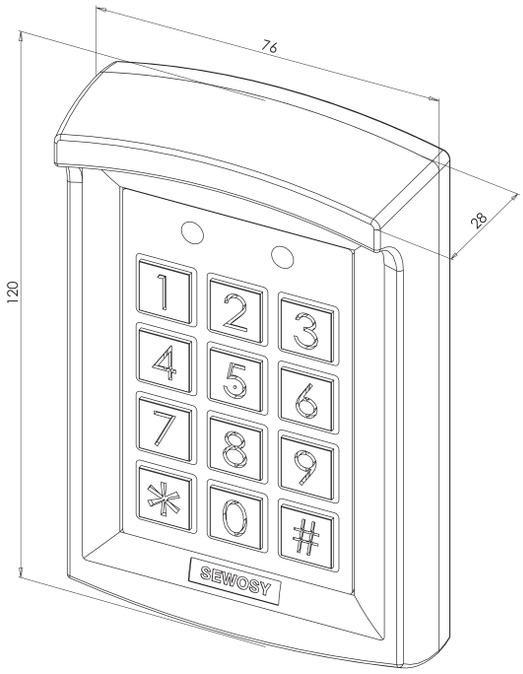

KR1000-W

LP-W PROXIMITY READER

WIEGAND output

- Output Wiegand 26 bits
- Integrated proximity reader EM4200 125 kHz
- Suitable for narrow profiles (depending on model)
- 3 meters cable

LP-W

CHARACTERISTICS

Dimensions H x W x D	LP-W 396ISO1EM1 396SHEM1	90,6 x 44,75 x 19,6 mm 54 x 85,6 x 0,80 mm 56,6 x 32 x 8,2 mm

V AC/DC	12-24V AC/DC	ImA AC/DC	max. 120 mA
°C	READER -20 +60 °C 396ISO1EM1 -20 +60 °C 396SHEM1 -30 +65 °C	IP	67 67 66

396ISO1EM1

396SHEM1

LP-W	Stand - alone proximity reader 12/24V AC/DC 125kHz - WIEGAND 26 bits	0,15 kg	Customs code 85437090
396ISO1EM1	Proximity ISO card EM4200 125 kHz	0,005 kg	
396SHEM1	Proximity keyfob Shark EM4200 125 kHz	0,007 kg	Customs code 85235290

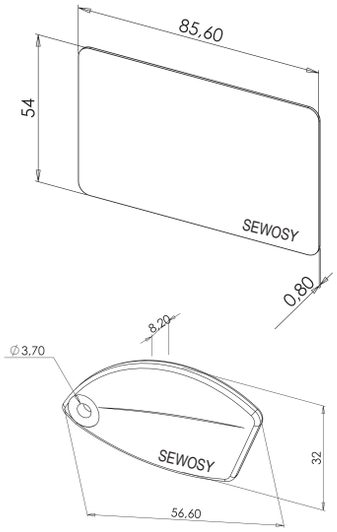

396ISO1EM1

396SHEM1

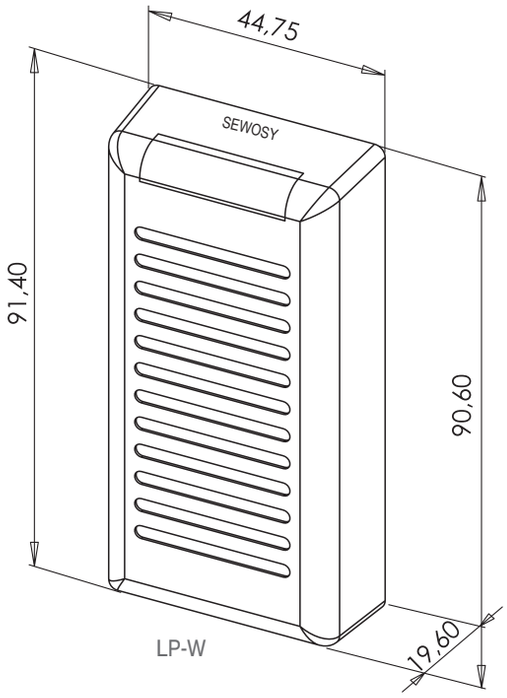

LP-W

ROUREG™ fail-secure electric strike operated by a keypad card reader KRN1000 (in 12V DC).

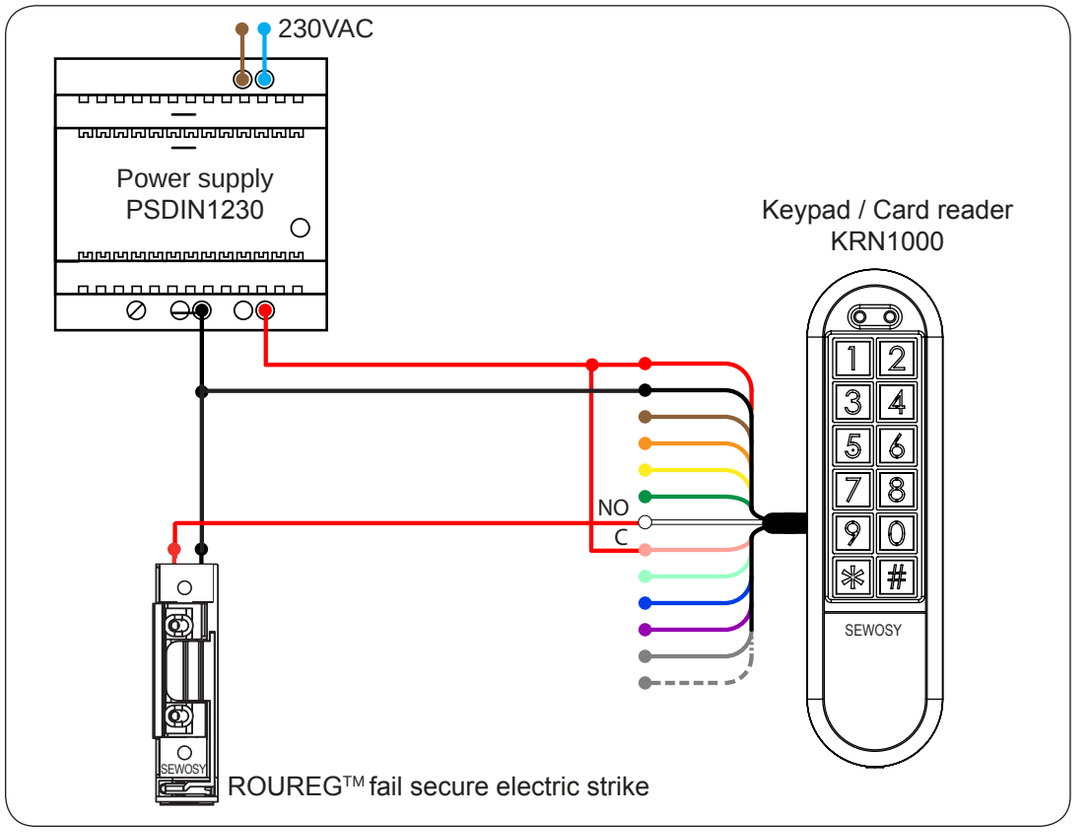

ROUREG™ fail-secure electric strike operated by a keypad card reader KR1000 (in 12V DC)

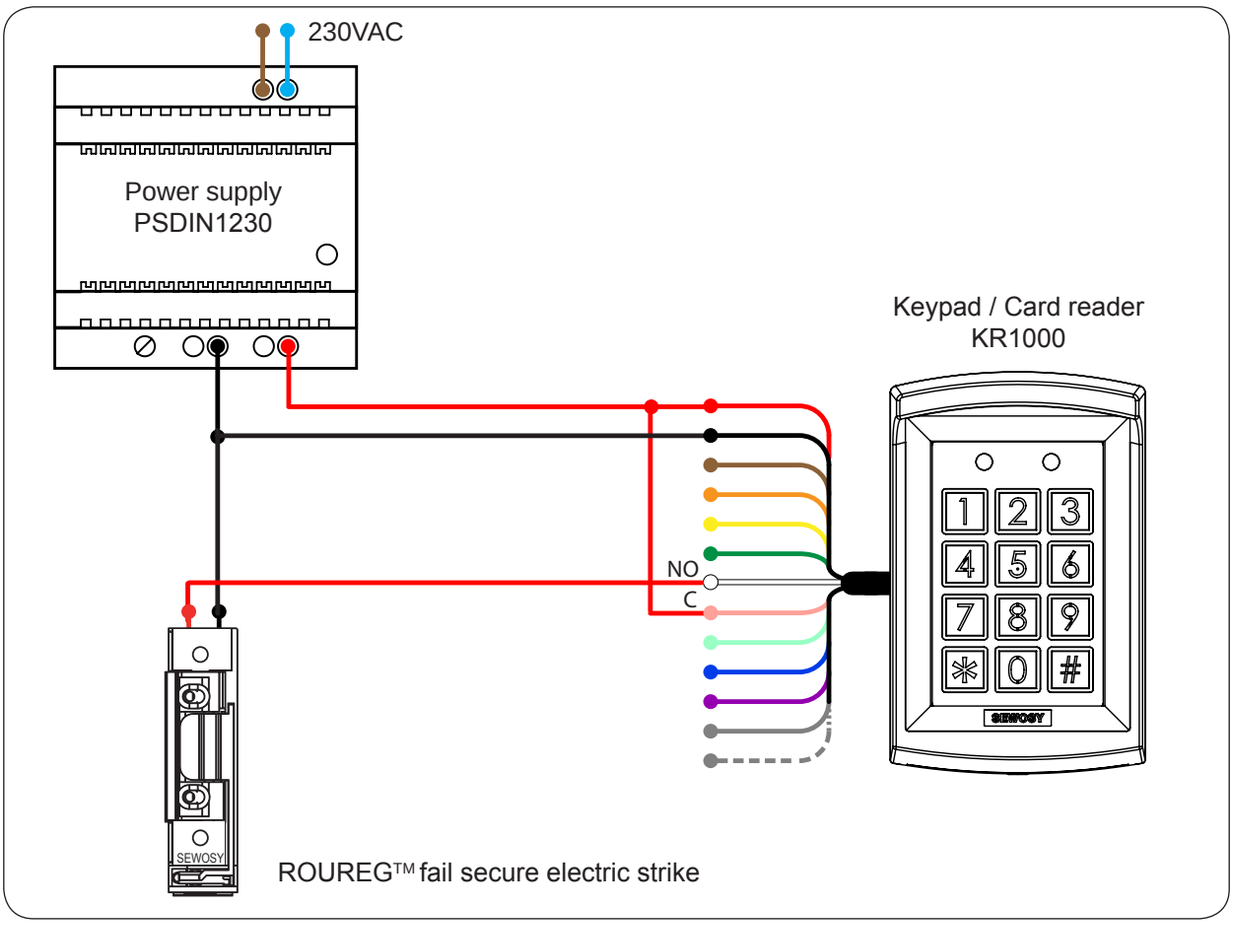

The unlocking of a ROUREG™ fail-secure electric strike is operated by a keypad / card reader.
Power supply type: class 2, without battery backup.

CPREG™ 1 or 2 aluminium housing operated by a keypad / card reader KR1000 (in 12V DC) and auxiliary release by a backlighted push button.

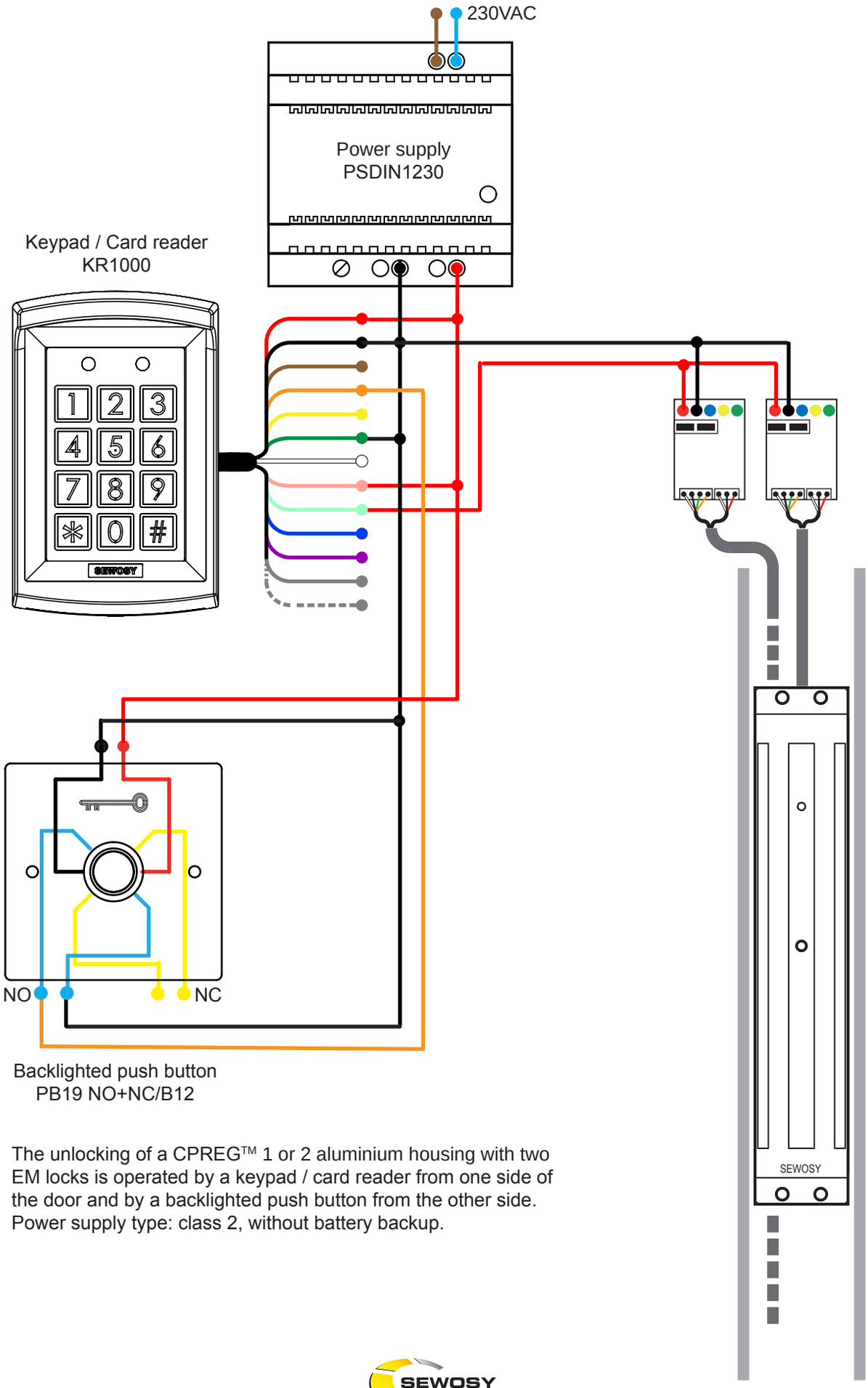

The unlocking of a CPREG™ 1 or 2 aluminium housing with two EM locks is operated by a keypad / card reader from one side of the door and by a backlighted push button from the other side. Power supply type: class 2, without battery backup.

EF300CTC surface-mount VELMAG™ EM lock operated by a keypad card reader KR1000 and a backlighted push button (in 12V DC).

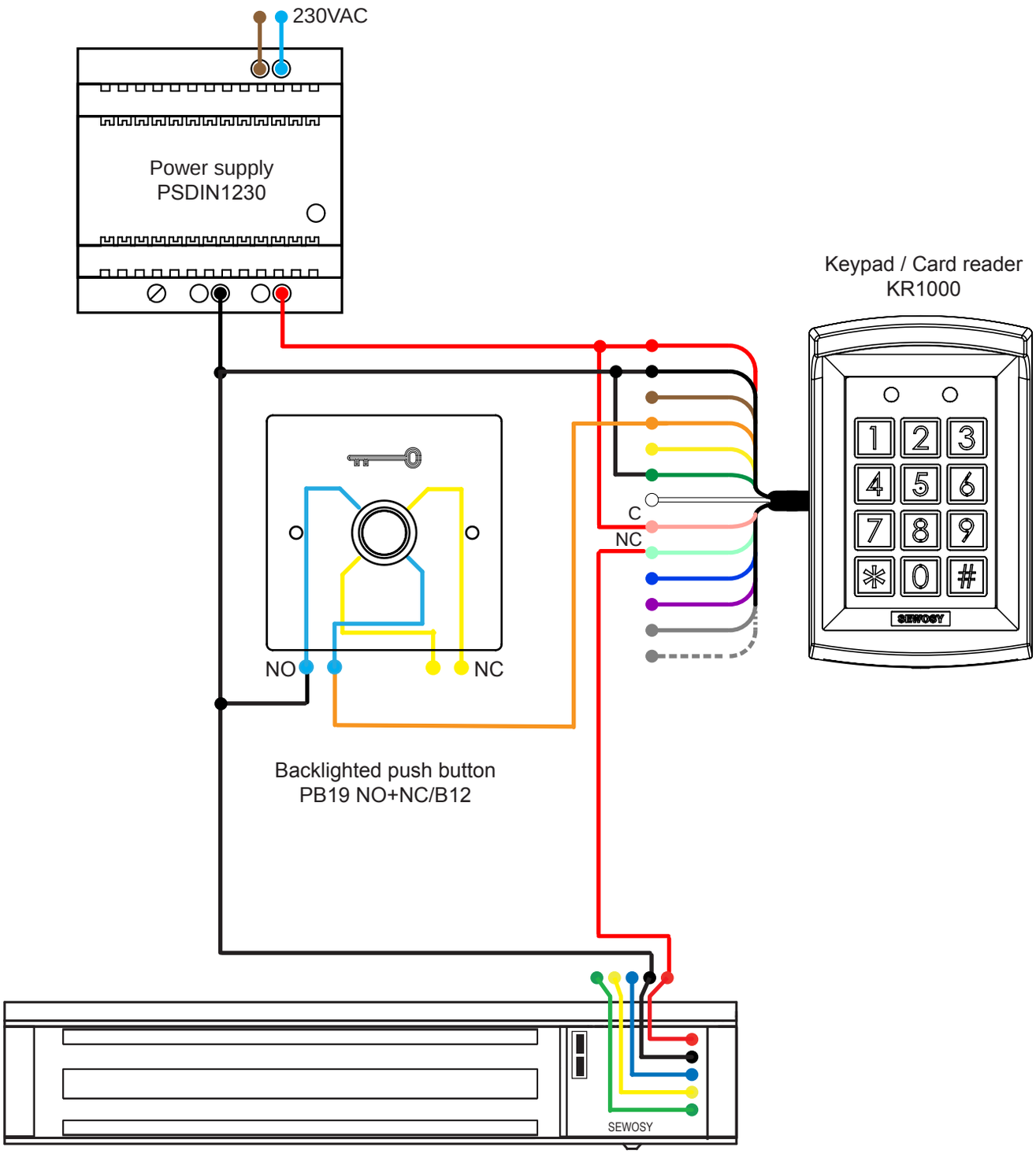

The unlocking of a surface-mount VELMAG™ EM lock is operated by a keypad / card reader and a backlighted push button. Power supply type: class 2, without battery backup.

EF300CTC surface-mount VELMAG™ EM lock operated by a keypad card reader KR1000 and a backlighted push button (in 12V DC), with daytime open access.

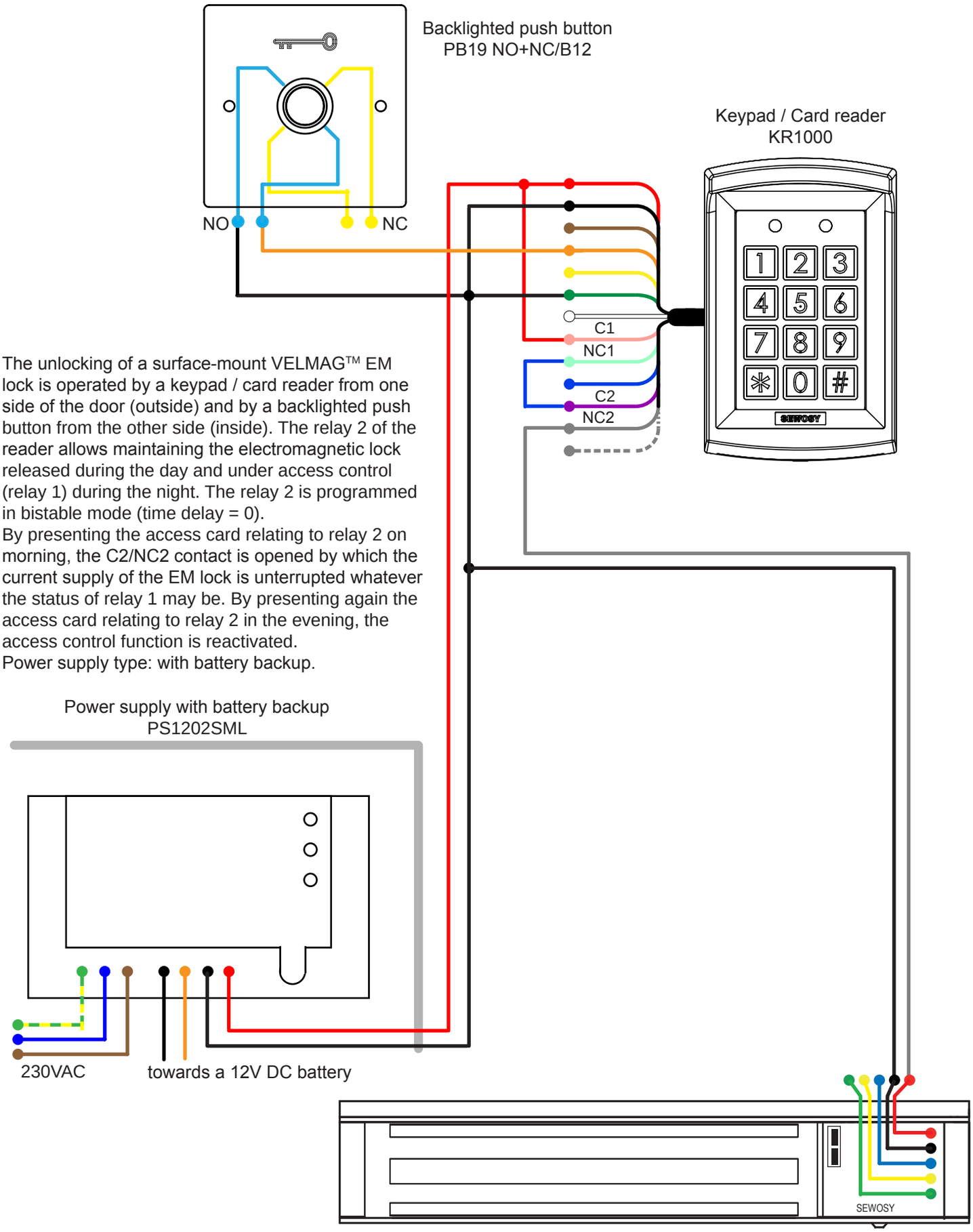

The unlocking of a surface-mount VELMAG™ EM lock is operated by a keypad / card reader from one side of the door (outside) and by a backlighted push button from the other side (inside). The relay 2 of the reader allows maintaining the electromagnetic lock released during the day and under access control (relay 1) during the night. The relay 2 is programmed in bistable mode (time delay = 0).
By presenting the access card relating to relay 2 on morning, the C2/NC2 contact is opened by which the current supply of the EM lock is unterrupted whatever the status of relay 1 may be. By presenting again the access card relating to relay 2 in the evening, the access control function is reactivated.
Power supply type: with battery backup.

CPREG™ 1 or 2 aluminium housing operated by 2 keypads / card readers KRN1000 (in 24V DC) associated with a manual call point and a remote command by a CMSI.

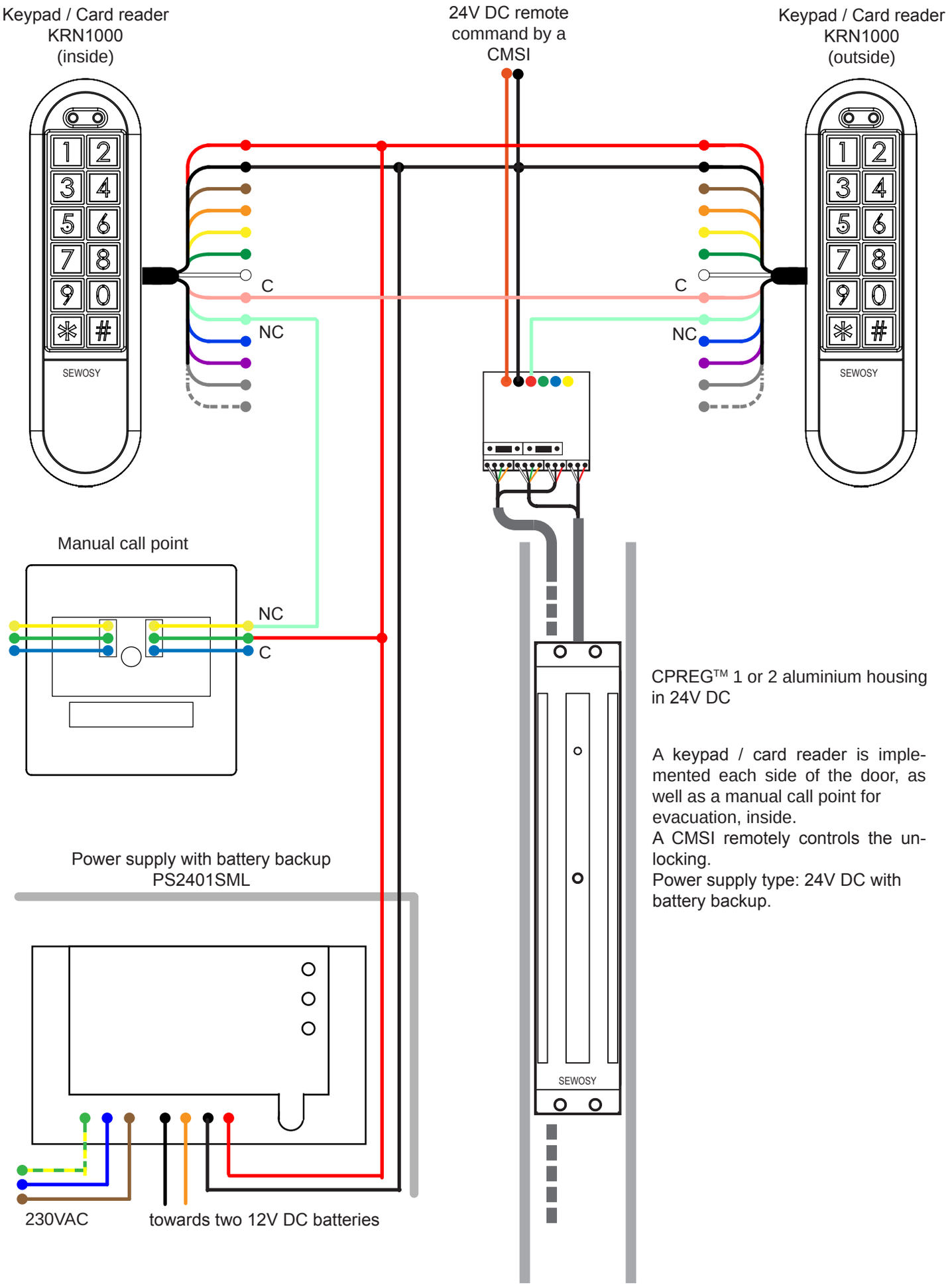

CPREG™ 1 or 2 aluminium housing in 24V DC

A keypad / card reader is implemented each side of the door, as well as a manual call point for evacuation, inside.
A CMSI remotely controls the unlocking.
Power supply type: 24V DC with battery backup.

PROXIMITY CARDS AND KEYFOBS

ISO PROXIMITY CARDS

125 kHz

- Customizable (see page 222)
- Original chip of manufacturers
- Conformity with the ISO 7810

396ISO1EM1

CHARACTERISTICS

Dimensions H x W x D	54 x 85,6 x 0,80 mm		
°C	-20 +60 °C	IP	67

396ISO1EM1	Proximity ISO card EM4200 125 kHz	0,005 kg	
396ISO1HT2	Proximity ISO card Philips HITAG 2 125 kHz	0,005 kg	
396ISO1TM5557	Proximity ISO card TEMIC 5557 125 kHz	0,005 kg	Customs code 85235290

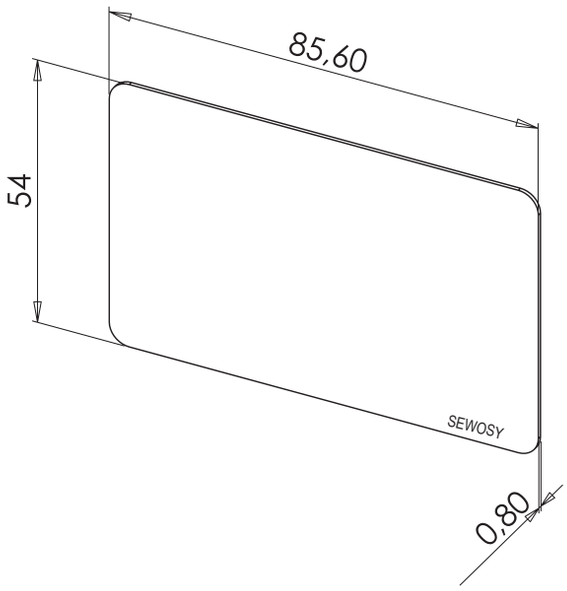

ISO PROXIMITY CARDS

13,56 MHz

- Customizable (see page 222)
- Original chip of manufacturers
- Conformity with the ISO 7810

396ISO1MF1

CHARACTERISTICS

Dimensions H x W x D	54 x 85,6 x 0,80 mm
-20 +60 °C	67

396ISO1MF1	Proximity ISO card Philips Mifare 1k 13,56 MHz	0,005 kg	
396ISO1MFDF	Proximity ISO card Philips Mifare desfire 2k	0,005 kg	
396ISO1MFUL	Proximity ISO card Philips Mifare ultralight 13,56 MHz	0,005 kg	
396ISO1LG256	Proximity ISO card LEGIC mim 256 13,56 MHz	0,005 kg	
396ISO1LG1024	Proximity ISO card LEGIC mim 1024 13,56 MHz	0,005 kg	Customs code 85235290

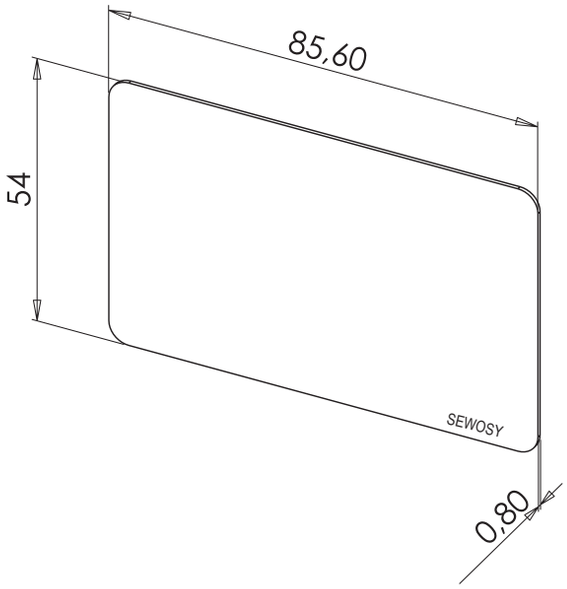

PROXIMITY CARDS

multitechnology cards

- Ideal for extensions of site of different technologies
- Customizable (see page 222)
- Original chip of manufacturers
- Conformity with the ISO 7810

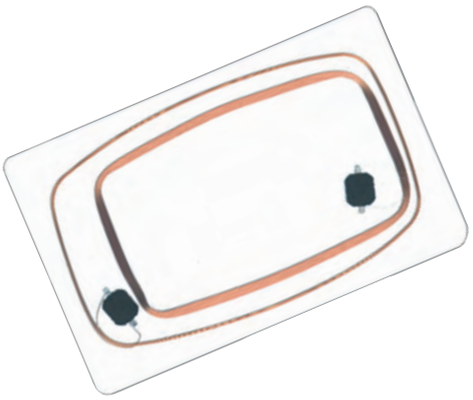

396ISO1EM1+MF1

CHARACTERISTICS

Dimensions H x W x D	54 x 85,6 x 0,80 mm		
°C	-20 +60 °C	IP	67

396ISO1EM1+MF1	Proximity card ISO EM4200 125 kHz + Mifare 1k 13.56 mHz	0,005 kg	
396ISO1EM1LG256	Proximity card ISO EM4200 125 kHz + Legic 256 13.56 Mhz	0,005 kg	
396ISO1MF1HT2	Proximity card ISO Mifare 1k 13.56 mHz + Hitag 2 125 kHz	0,005 kg	
396ISO1MF1LG256	Proximity card ISO mifare 1 K 13.56 mHz + Legic 256 13.56 mHz	0,005 kg	
396ISO1MF4HT2	Proximity card ISO mifare 4k 13.56 mHz + Hitag 2 125 kHz	0,005 kg	
396ISO1MF1LG256EM1	Proximity card ISO mifare 1K 13.56 mHz + Legic 256 13.56 mHz + EM4200 125 kHz	0,005 kg	
396ISO1MF1LG256HT2	Proximity card ISO Mifare 1 K 13.56 mHz+ Legic 256 13.56 mHz + Hitag 2 125 kHz	0,005 kg	Customs code 85235290

► **Other technologies on demand**

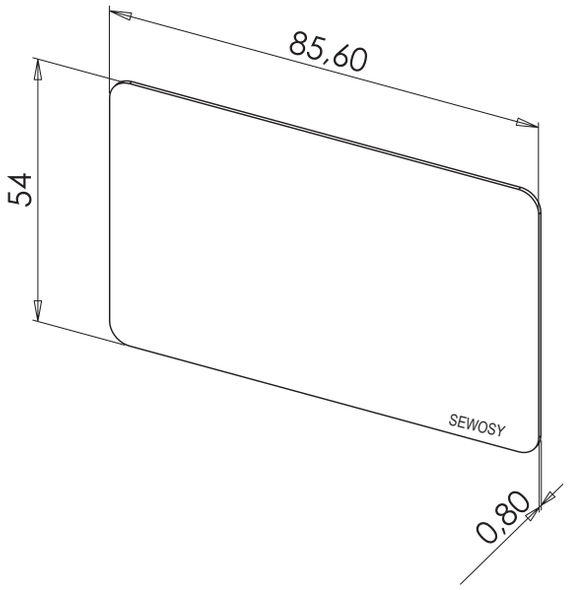

PROXIMITY KEYFOBS

125 kHz

- High mechanical resistance
- Customizable (see page 222)
- Various designs available

396P1EM1

396P2EM1

396WD1EM1

396SHEM1

CHARACTERISTICS

Product number	Dimensions H x W x D	°C	IP
396P1EM1 ⇨ 396P1TM5557	36,4 x 30 x 7,1 mm	-15 +60 °C	66
396P2HT1 ⇨ 396P2TM5557	36,4 x 30 x 7,1 mm	-15 +60 °C	66
396WD1EM1 ⇨ 396WD1TM5557	45 x 30 x 1,60 mm	-15 +60 °C	66
396SHEM1 ⇨ 396SHTM5557	56,6 x 32 x 8,2 mm	-30 +65 °C	66

P1	kg	P2	kg	Chip (*)	Technology	Frequency	Storage	Mode
396P1EM1	0,003 kg			MARIN	EM4200	125 kHz	64 Bits	READ-ONLY
396P1HT1	0,003 kg	396P2HT1	0,003 kg	PHILIPS	HITAG1	125 kHz	2048 Bits	READ / WRITE
396P1HT2	0,003 kg	396P2HT2	0,003 kg	PHILIPS	HITAG2	125 kHz	256 Bits	READ / WRITE
396P1TM5557	0,003 kg	396P2TM5557	0,003.kg	TEMIC	TEMIC 5557	125 kHz	330 Bits	READ / WRITE

WD1	kg	SH	kg	Chip (*)	Technology	Frequency	Storage	Mode
396WD1EM1	0,002 kg	396SHEM1	0,007 kg	MARIN	EM4200	125 kHz	64 Bits	READ-ONLY
396WD1HT1	0,002 kg	396SHHT1	0,01.kg	PHILIPS	HITAG1	125 kHz	2048 Bits	READ / WRITE
396WD1HT2	0,002 kg	396SHHT2	0,01.kg	PHILIPS	HITAG2	125 kHz	256 Bits	READ / WRITE
396WD1TM5557	0,002 kg	396SHTM5557	0,007 kg	TEMIC	TEMIC 5557	125 kHz	330 Bits	READ / WRITE

(*) Chip manufacturer

Customs code
85235290

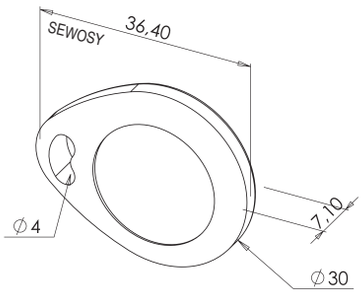

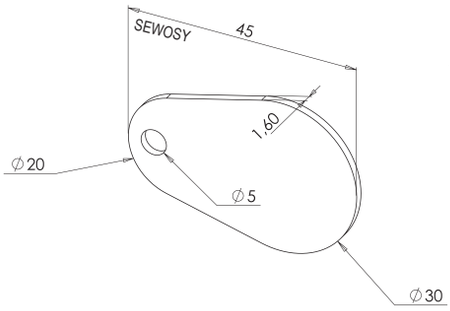

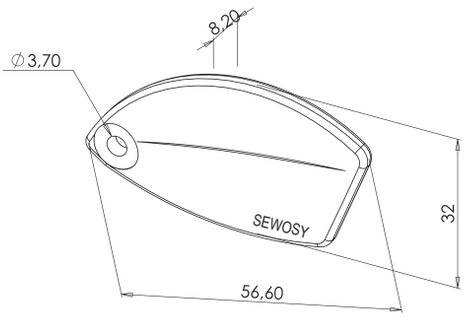

PROXIMITY KEYFOBS

13,56 MHz

- High mechanical resistance
- Customizable (see page 222)
- Various designs available

396P1LG256

396P2MF1

396WD1LG256

396SHMF1

CHARACTERISTICS

Product number	Dimensions H x W x D	°C	IP
396P1MF1 ⇨ 396P1LG256	36,4 x 30 x 7,1 mm	-15 +60 °C	66
396P2MF1 ⇨ 396P2LG256	36,4 x 30 x 7,1 mm	-15 +60 °C	66
396WD1MF1 ⇨ 396WD1LG256	45 x 30 x 1,60 mm	-15 +60 °C	66
396SHMF1 ⇨ 396SHLG256	56,6 x 32 x 8,2 mm	-30 +65 °C	66

P1	kg	P2	kg	Chip (*)	Technology	Frequency	Storage	Mode
396P1MF1	0,003 kg	396P2MF1	0,003 kg	PHILIPS	MIFARE 1 K	13,56 MHz	1024 Bits	READ / WRITE
396P1MF4	0,003 kg	396P2MF4	0,003 kg	PHILIPS	MIFARE 4 K	13,56 MHz	4096 Bits	READ / WRITE
396P1LG256	0,003 kg	396P2LG256	0,003 kg	LEGIC	LEGIC MIM 256	13,56 MHz	256 Bits	READ / WRITE

WD1	kg	SH	kg	Chip (*)	Technology	Frequency	Storage	Mode
396WD1MF1	0,002 kg	396SHMF1	0,007 kg	PHILIPS	MIFARE 1 K	13,56 MHz	1024 Bits	READ / WRITE
396WD1MF4	0,002 kg	396SHMF4	0,007 kg	PHILIPS	MIFARE 4 K	13,56 MHz	4096 Bits	READ / WRITE
396WD1LG256	0,002 kg	396SHLG256	0,01 kg	LEGIC	LEGIC MIM 256	13,56 MHz	256 Bits	READ / WRITE

(*) Chip manufacturer

Customs code
85235290

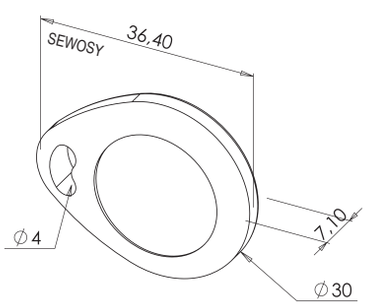

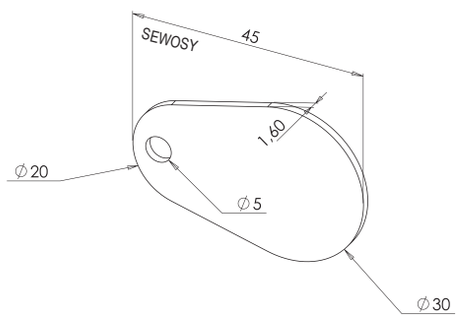

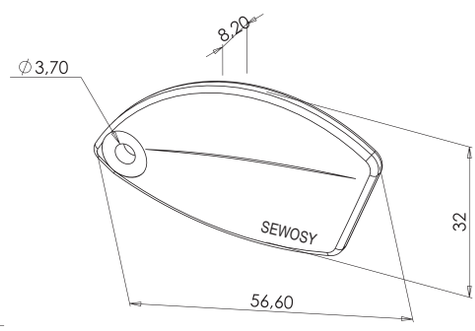

ACCESSORIES

for proximity cards and keyfobs

PB-21-B

PB-21-NR

CHARACTERISTICS

Product number	Dimensions H x W x D	°C
PB-21-B ⇨ PB-21-NR	57,5 x 91 x 4 mm	-10 +60 °C
396RING	25 x 1 mm	-
396ESCPC	-	-10 +60 °C

396RING

396ESCPC

PB-21-B	Card case blue	0,01 kg	
PB-21-NR	Card case black	0,01 kg	Customs code 39234090
396RING	Metal ring for proximity keyfob	0,001 kg	
396ESCPC	Yoyo Keychain	0,02 kg	
396MOUS	Carabiner Keychain	0,012 kg	Customs code 85235290

SERVICES FOR PROXIMITY CARDS AND KEYFOBS

- ► For your specific applications, please contact us!
- ► To customize your proximity cards and keyfobs:

  • Number (chronological, chip number identification, etc.), text, logo, picture
  • High quality print through sublimation process!

CONTACT US!

ACCESSORIES

ELECTRIC LOCKS

METAL BOX SWITCHING MODE POWER SUPPLIES 226

12V DC 3 AND 5A - WITH BATTERY BACKUP 226
24V DC 2,5 AND 5A - WITH BATTERY BACKUP 227
12V DC - 24V DC 10A - WITH BATTERY BACKUP 228
MULTICHANNEL - WITH BATTERY BACKUP 229
MULTICHANNEL - WITHOUT BATTERY BACKUP
CONNECTION VIA SCREW TERMINALS 230
12V DC 20 A - WITH BATTERY BACKUP 231

SWITCHING MODE POWER SUPPLIES 232

MULTICHANNEL - RACKABLE - WITHOUT BATTERY BACKUP 232

UPGRADEABLE METAL BOX SWITCHING MODE
POWER SUPPLIES 233

12V DC - WITH BATTERY BACKUP 233
24V DC - WITH BATTERY BACKUP 234

DIN RAIL MODULAR POWER SUPPLIES 235

12V DC - WITHOUT BATTERY BACKUP 235
24V DC - WITHOUT BATTERY BACKUP 236
48V DC - WITHOUT BATTERY BACKUP 237

SINGLE OUTPUT CONVERTER - MODULAR TRANSFORMER
ON DIN RAIL 238

12V DC BATTERIES 239

VARIOUS ACCESSORIES 241

DIGITAL WEEKLY TIME CLOCKS 242
CURRENT TRANSMITTERS 243
TIMERS AND RELAY MODULE 244

DOOR LOOPS AND CABLE LINKS 245

SURFACE-MOUNT DOOR LOOPS - STAINLESS STEEL 246
SURFACE-MOUNT DOOR LOOPS - WHITE 247
SURFACE-MOUNT DOOR LOOPS - BLACK 248
SURFACE-MOUNT REINFORCED DOOR LOOPS - STAINLESS STEEL 249
MORTISE-MOUNT - ADJUSTABLE 250
MORTISE-MOUNT - ADJUSTABLE - COMPLETE KIT 251
SURFACE-MOUNT - PLUGGABLE - MINIATURE SIZE 252
MORTISE-MOUNT - PLUGGABLE 253

POSITION CONTACTS 255

ROLLER BALL CONTACTS 256

MADE OF ABS 256
METAL BODY 257

CYLINDRICAL MORTISE-MOUNT MAGNETIC CONTACTS 258

FOR WOOD 258
FOR METAL 259
WITH MAGNET 260

ECCENTRIC MORTISE-MOUNT MAGNETIC CONTACTS 261

WHITE ABS BODY 261
BRASS BODY 262

SURFACE-MOUNT MAGNETIC CONTACTS 263

RECTANGULAR 263
RECTANGULAR - WITH SCREWS KIT 264
RECTANGULAR - ALUMINIUM BODY 265
ROLLER SHUTTER 266

BOLT SWITCH CONTACTS 267

PUSH BUTTONS 269

STAINLESS STEEL / VANDAL-PROOF PUSH BUTTONS 270

WITH CRIMP-TYPE TERMINALS 270
WITH CRIMP-TYPE TERMINALS AND MORTISE-MOUNT PLATE 271
WITH SOLDERED WIRES AND SHRINK TUBE 272
WITH SOLDERED WIRES / SHRINK TUBE AND MORTISE-MOUNT PLATE 273
WITH SCREW-TERMINALS 274
WITH SCREW-TERMINALS AND MORTISE-MOUNT PLATE 275
STAINLESS STEEL MORTISE-MOUNT PLATES 276
STAINLESS STEEL SURFACE-MOUNT HOUSINGS 277

OTHER PUSH-BUTTONS 278

FOR DISABLED PERSONS - ABS BODY 278
CONTACTLESS MICROWAVE BUTTON 279
FOR DISABLED PERSONS - WITH BRAILLE MARKING 280
FOR DISABLED PERSONS - BRAILLE MARKING - FOR NARROW PROFILES 281

KEY SWITCHES 282

MORTISE-MOUNT 284
SURFACE-MOUNT 285
UNIVERSAL 286

POWER SUPPLIES

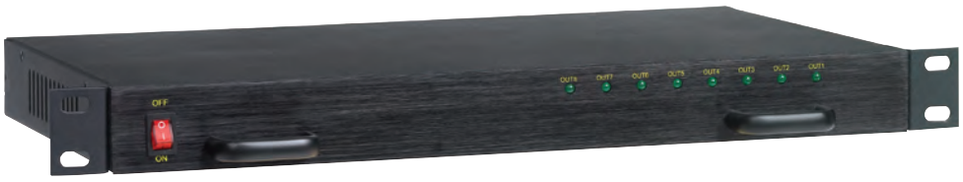

- Lockable box, various sizes and removable front panel
- Remote monitoring
- Self-protection

METAL BOX SWITCHING MODE POWER SUPPLIES

12V DC 3 and 5A - with battery backup

- Information report (low battery and no mains)
- Locking of box by key
- Embedded self-protection
- Protection by electronic fuse (PTC)
- 3 LEDs on front

AD1203R

AD1205R

CHARACTERISTICS

Product number	Dimensions H x W x D	V IN	V OUT	I (A)	W	°C	IP
AD1203R	203 x 163 x 73,8 mm	110V - 240V AC	12V DC	3 A	36 W	0 +40 °C	40
AD1203GR	295 x 195 x 90 mm	110V - 240V AC	12V DC	3 A	36 W	0 +40 °C	40
AD1205R	264 x 196 x 73,80 mm	110V - 240V AC	12V DC	5 A	60 W	0 +40 °C	40
AD1205GR	295 x 195 x 90 mm	110V - 240V AC	12V DC	5 A	60 W	0 +40 °C	40

AD1203R	Switching mode power supply 12V DC 3 A with output relay	1,2 kg	
AD1203GR	Switching mode power supply 12V DC 3 A with output relay - large box	2 kg	
AD1205R	Switching mode power supply 12V DC 5 A with output relay	1,4 kg	
AD1205GR	Switching mode power supply 12V DC 5 A with output relay - large box	2 kg	Customs code 85044090

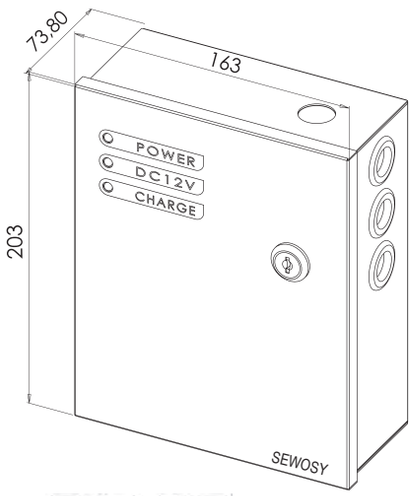

AD1203R

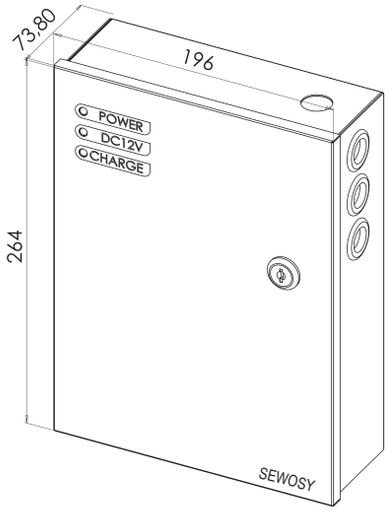

AD1205R

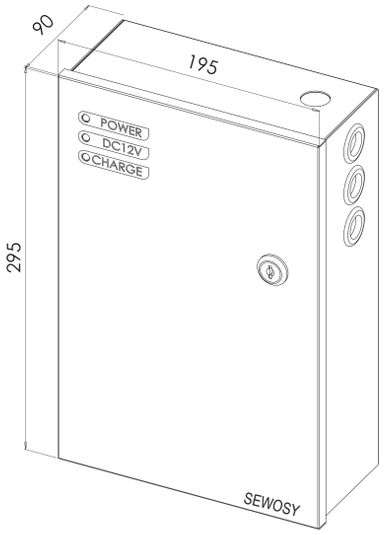

AD1205GR
AD1203GR

METAL BOX SWITCHING MODE POWER SUPPLIES

24V DC 2,5 and 5A - with battery backup

- Information report (low battery and no mains)
- Locking of box by key
- Embedded self-protection
- Protection by electronic fuse (PTC)
- LEDs on front

AD24025R

AD2405R

CHARACTERISTICS

Product number	Dimensions H x W x D	V IN	V OUT	I (A)	W	°C	IP
AD24025R	395 x 285 x 86,8	100 - 240V AC	24V DC	2,5 A	60 W	0 +40 °C	40
AD2405R	395 x 285 x 86,8	100 - 240V AC	24V DC	5 A	120 W	0 +40 °C	40

AD24025R	Switching mode power supply 24V DC 2,5A with output relay	4,3 kg	Customs code 85044090
AD2405R	Switching mode power supply 24V DC 5A with output relay	4,8 kg	

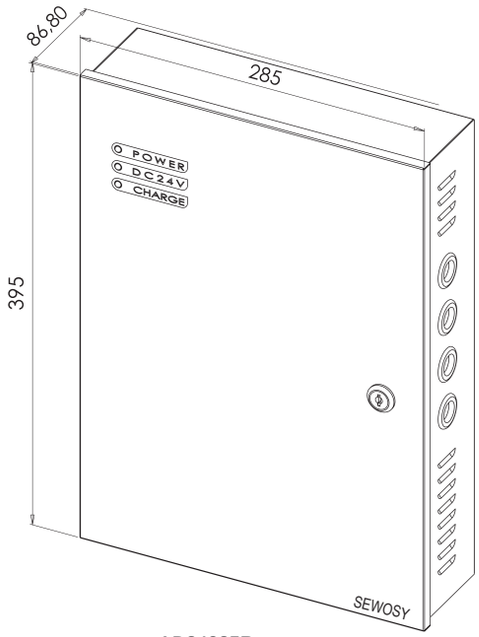

AD24025R

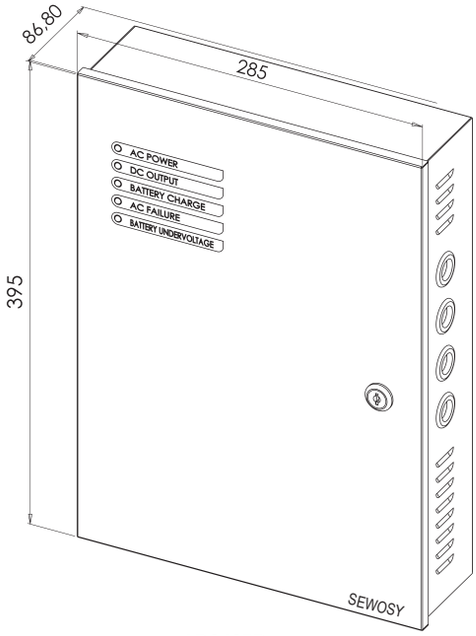

AD2405R

METAL BOX SWITCHING MODE POWER SUPPLIES

12V DC - 24V DC 10A - with battery backup

- Information report (low battery and no mains)
- Locking of box by key
- Embedded self-protection
- Protection by electronic fuse (PTC)
- LEDs on front

AD1210R

AD2410R

CHARACTERISTICS

Product number	Dimensions H x W x D	V IN	V OUT	I (A)	W	°C	IP
AD1210R	395 x 285 x 86,80 mm	110V - 240V AC	12V DC	10 A	120 W	0 +40 °C	40
AD2410R	395 x 285 x 166 mm	110V - 240V AC	24V DC	10 A	240 W	0 +40 °C	40

AD1210R	switching mode power supply 12vDC 10 A with output relay	4,7 kg	
AD2410R	Switching mode power supply 24V DC 10A with output relay Space for 2 batteries	6,2 kg	Customs code 85044090

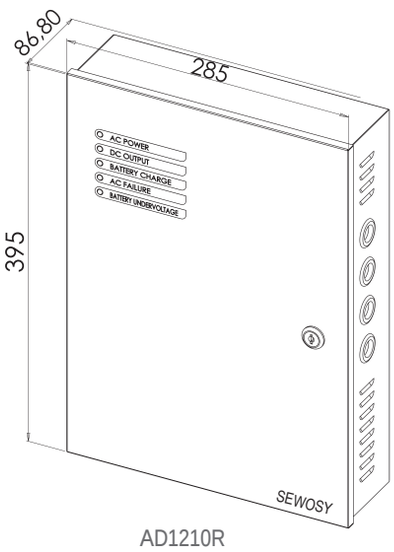

AD1210R

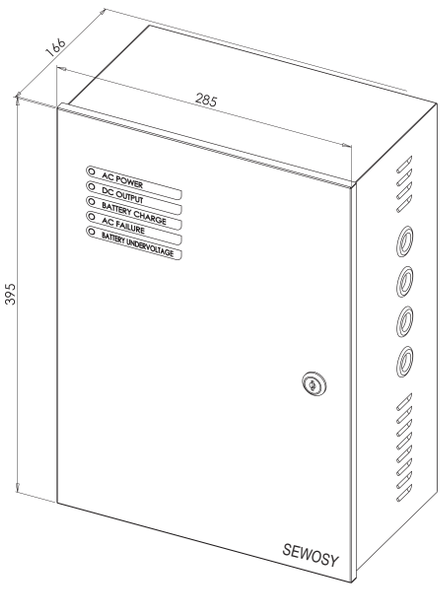

AD2410R

METAL BOX SWITCHING MODE POWER SUPPLIES

multichannel - with battery backup

- Ideal for CCTV
- Locking of box by key
- Embedded self-protection
- Protection by electronic fuse (PTC)
- LEDs on front

ADCCTVS1203-04

ADCCTVS1208-09

CHARACTERISTICS

Product number	Dimensions H x W x D	V IN	V OUT	I (A)	W	°C	IP
ADCCTVS1203-04	203 x 163 x 73,8 mm	110V - 240V AC	12V DC	3 A	36 W	0 +40 °C	40
ADCCTVS1205-08	264 x 196 x 73,8 mm	110V - 240V AC	12V DC	5 A	60 W	0 +40 °C	40
ADCCTVS1208-09	364 x 197 x 73,8 mm	110V - 240V AC	12V DC	8 A	96 W	0 +40 °C	40

ADCCTVS1203-04	CCTV switching mode power supply 12V DC 3 A 4 ways - with batteries backup	0,78 kg
ADCCTVS1205-08	CCTV switching mode power supply 12V DC 5 A 8 ways - with batteries backup	1,6 kg
ADCCTVS1208-09	CCTV switching mode power supply 12V DC 8 A 9 ways - with batteries backup	2,46 kg

Customs code
85044090

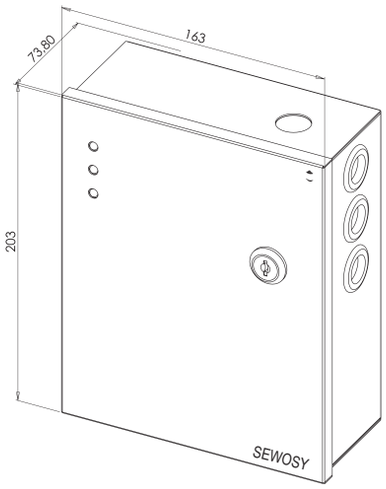

ADCCTVS1203-04

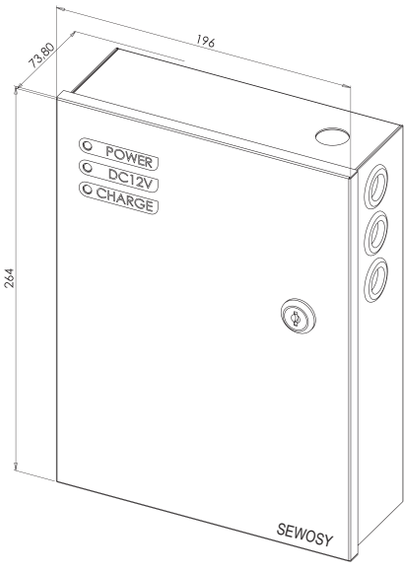

ADCCTVS1205-08

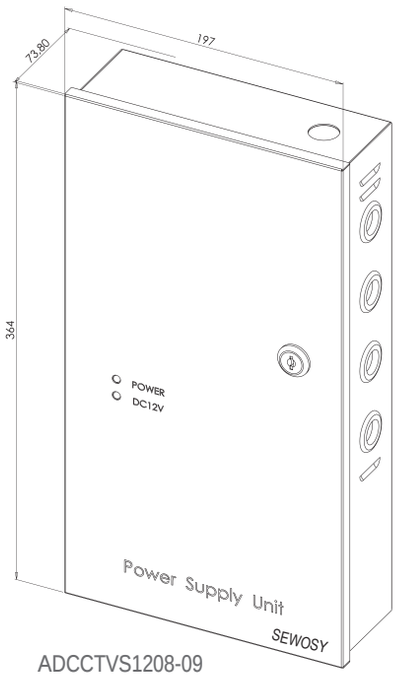

ADCCTVS1208-09

METAL BOX SWITCHING MODE POWER SUPPLIES

multichannel - without battery backup
connection via screw terminals

- Ideal for CCTV
- Locking of box by key
- Embedded self-protection
- Protection by electronic fuse (PTC)
- 1 LED on front (mains presence)

ADCCTV1203-04

ADCCTV1205-08

CHARACTERISTICS

Product number	Dimensions H x W x D	V IN	V OUT	I (A)	W	°C	IP
ADCCTV1203-04	163 x 163 x 49 mm	110V - 240V AC	12V DC	3 A	36 W	0 +40 °C	40
ADCCTV1205-08	203 x 203 x 53,5 mm	110V - 240V AC	12V DC	5 A	60 W	0 +40 °C	40

ADCCTV1203-04	CCTV switching mode power supply 12V DC 3 A 4 ways - no batteries backup	0,78 kg	
ADCCTV1205-08	CCTV switching mode power supply 12V DC 5 A 8 ways - no batteries backup	1,2 kg	Customs code 85044090

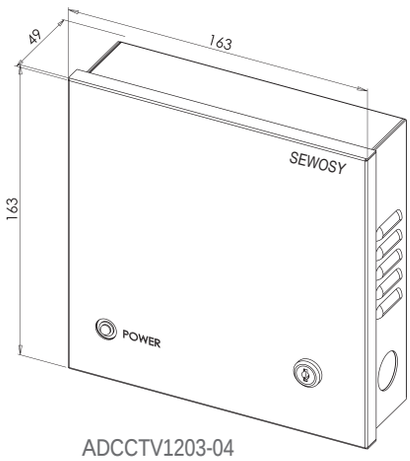

ADCCTV1203-04

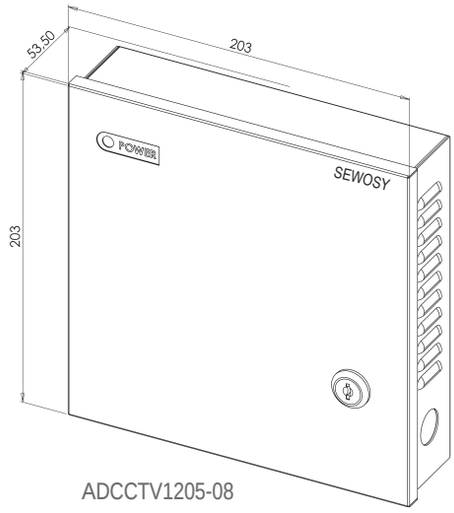

ADCCTV1205-08

METAL BOX SWITCHING MODE POWER SUPPLIES

12V DC 20 A - with battery backup

- Information report (low battery and no mains)
- Locking of box by key
- Embedded self-protection
- Protection by electronic fuse (PTC)
- LEDs on front

AD1220R

CHARACTERISTICS

Product number	Dimensions H x W x D	V IN	V OUT	I (A)	W	°C	IP
AD1220R	395 x 285 x 166 mm	110V - 240V AC	12V DC	20 A	240 W	0 +40 °C	40

AD1220R	Switching mode power supply 12V DC 20 A with output relay	4,7 kg	Customs code 85044090

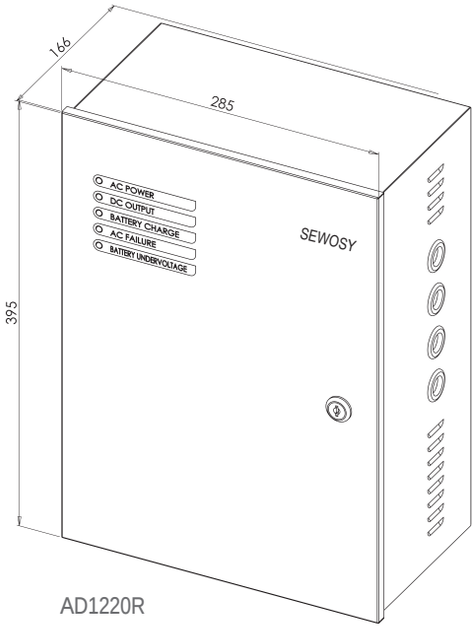

AD1220R

SWITCHING MODE POWER SUPPLIES

multichannel - rackable - without battery backup

- Fit into the computer racks
- Height 1 module
- Lighted ON/OFF button
- LEDs signaling 12V DC presence for each output

ADR1210-08

ADR1220-16

CHARACTERISTICS

Product number	Dimensions H x W x D	V IN	V OUT	I (A)	W	°C	IP
ADR1210-08	45,4 x 501 x 257,75 mm	110V - 240V AC	12V DC	10 A	120 W	0 +40 °C	10
ADR1220-16	45,4 x 501 x 257,75 mm	110V - 240V AC	12V DC	20 A	240 W	0 +40 °C	10

ADR1210-08	Rackable switching mode power supply 12VDC 10 A 8 ways - 1 U	4 kg	
ADR1220-16	Rackable switching mode power supply 12VDC 20 A 16 ways - 1 U	4,2 kg	Customs code 85044090
ADCAB3	European 3 Pin AC cable	1,2 kg	Customs code 85444995

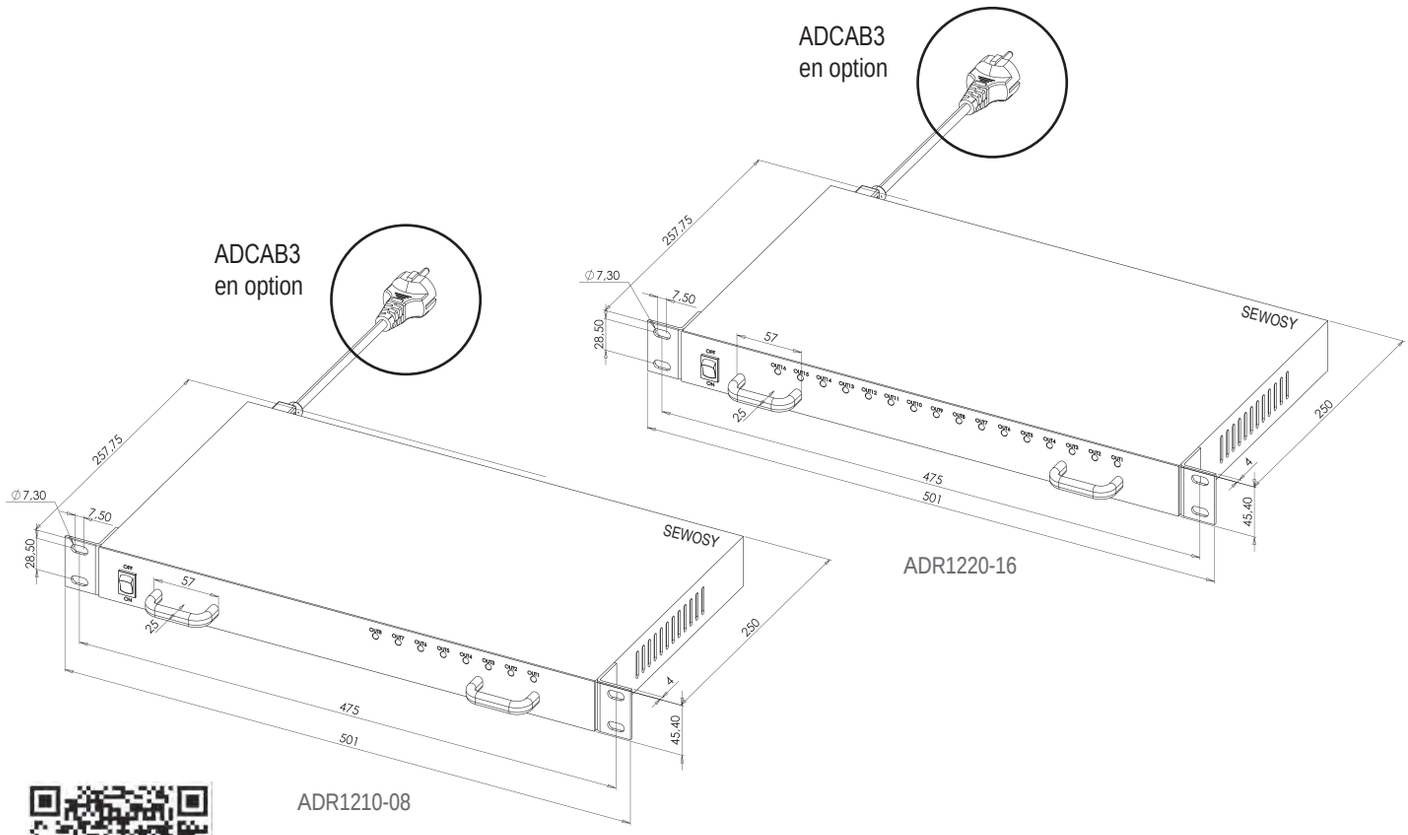

UPGRADEABLE METAL BOX
SWITCHING MODE POWER SUPPLIES

12V DC - with battery backup

- Different sizes of box on demand
- Internal specific wiring on demand
- Removable front panel
- Embedded self-protection
- Input and output protected by fuses
- Board of information report (as an option)

PS1201SML

PS1205SML

CHARACTERISTICS

Product number	Dimensions H x W x D	V IN	V OUT	I (A)	W	°C	IP
PS1201SML	225 x 200 x 75 mm	195 - 255V AC	12V DC	1 A	12 W	0 +40 °C	40
PS1202SML	225 x 200 x 75 mm	195 - 255V AC	12V DC	2 A	24 W	0 +40 °C	40
PS1203SML	225 x 200 x 75 mm	195 - 255V AC	12V DC	3 A	36 W	0 +40 °C	40
PS1205SML	306 x 339 x 83 mm	195 - 255V AC	12V DC	5 A	60 W	0 +40 °C	40

PS1201SML	Switching mode power supply in box 230V AC / 12 V DC / 1A	1,6 kg	
PS1202SML	Switching mode power supply in box 230V AC / 12 V DC / 2A	1,6 kg	
PS1203SML	Switching mode power supply in box 230V AC / 12 V DC / 3A	1,6 kg	
PS1205SML	Switching mode power supply in box 230V AC / 12 V DC / 5A	3,2 kg	
PCBSMPL12	PCB for power supply SML version 12V DC with AC and battery fault excluding PS1201SML	0,02 kg	Customs code 85044090

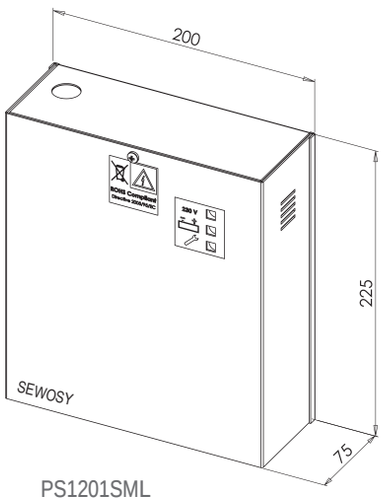

PS1201SML
PS1202SML
PS1203SML

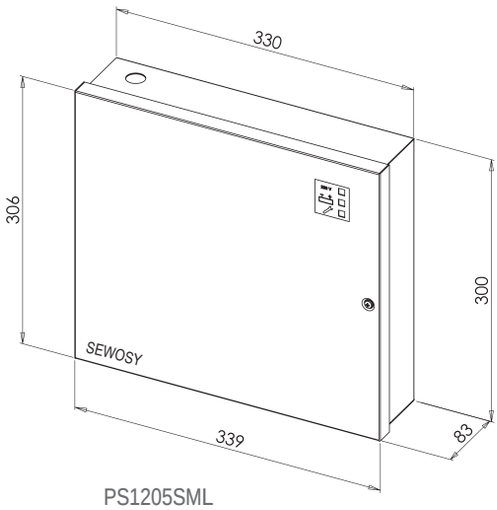

PS1205SML

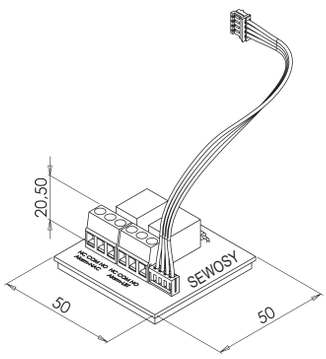

PCBSMPL12

SEWOSY

UPGRADEABLE METAL BOX SWITCHING MODE POWER SUPPLIES

24V DC - with battery backup

- Different sizes of box on demand
- Internal specific wiring on demand
- Removable front panel
- Embedded self-protection
- Input and output protected by fuses
- Board of information report (as an option)

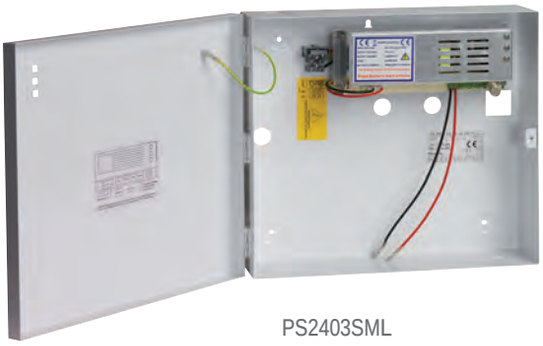

PS2403SML

CHARACTERISTICS

Product number	Dimensions H x W x D	V IN	V OUT	I (A)	W	°C	IP
PS2401SML	306 x 337 x 83 mm	195 - 255V AC	24V DC	1 A	24 W	0 +40 °C	40
PS2402SML	306 x 337 x 83 mm	195 - 255V AC	24V DC	2 A	48 W	0 +40 °C	40
PS2403SML	306 x 337 x 83 mm	195 - 255V AC	24V DC	3 A	72 W	0 +40 °C	40
PS2405SML	306 x 337 x 83 mm	195 - 255V AC	24V DC	5 A	120 W	0 +40 °C	40

PS2401SML	Switching mode power supply in box 230V AC / 24 V DC / 1A	3 kg	
PS2402SML	Switching mode power supply in box 230V AC / 24 V DC / 2A	3,1 kg	
PS2403SML	Switching mode power supply in box 230V AC / 24 V DC / 3A	3,3 kg	
PS2405SML	Switching mode power supply in box 230V AC / 24 V DC / 5A	5 kg	
PCBSMPL24	PCB for power supply SML version 24V DC with AC and battery fault	0,02 kg	Customs code 85073020

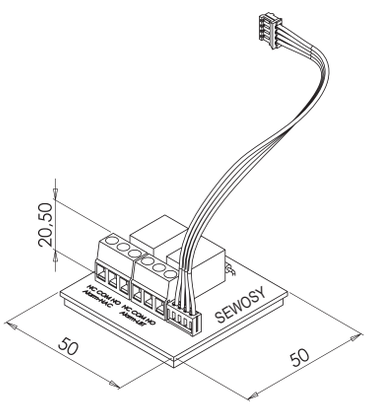

PCBSMPL24

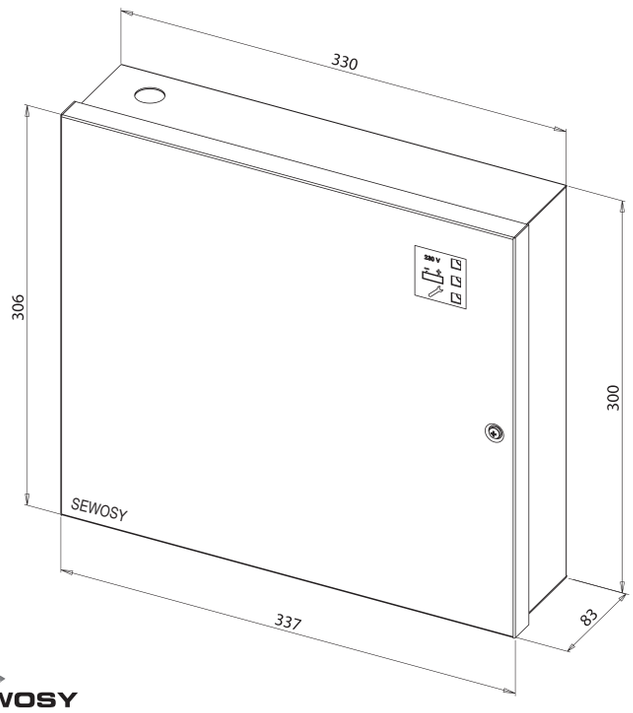

PS2401SML
PS2402SML
PS2403SML
PS2405SML

DIN RAIL MODULAR POWER SUPPLIES

12V DC - without battery backup

- Fit in electrical cabinets (5 modules)
- Double outputs (+/-)
- Protection by electronic fuse (PTC)
- LED mains presence
- Insulation class II

PSDIN1230

CHARACTERISTICS

Dimensions H x W x D	94 x 88 x 66 mm		
V IN	100 - 240V AC	V OUT	12V DC
I (A)	PSDIN1230 ⇨ 2,5 A PSDIN1245 ⇨ 3,75 A PSDIN1260 ⇨ 5 A	W	30 W 45 W 60 W
°C	-10 +60 °C		

PSDIN1230	Power supply on DIN rail 230V AC / 12V DC / 30W - 2,5A	0,3 kg	
PSDIN1245	Power supply on DIN rail 230V AC / 12V DC / 45W - 3,75A	0,3 kg	
PSDIN1260	Power supply on DIN rail 230V AC / 12V DC / 60W - 5A	0,3 kg	Customs code 85044090

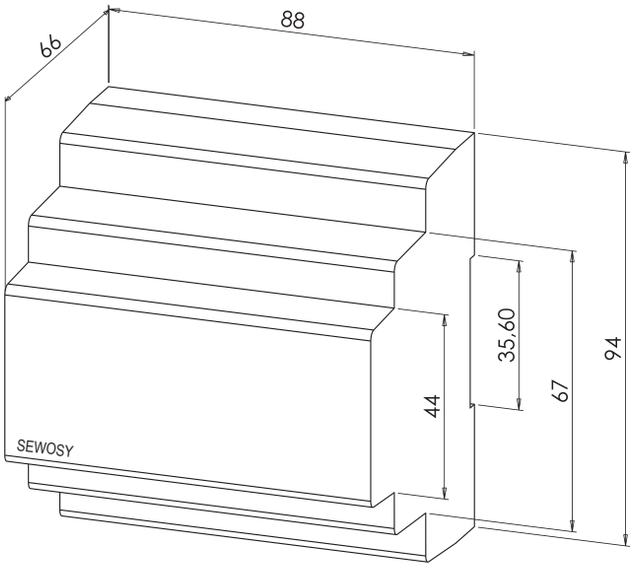

DIN RAIL MODULAR POWER SUPPLIES

24V DC - without battery backup

- Fit in electrical cabinets (5 modules)
- Double outputs (+/-)
- Protection by electronic fuse (PTC)
- LED mains presence
- Insulation class II

PSDIN2430

CHARACTERISTICS

Dimensions H x W x D	94 x 88 x 66 mm		
V IN	100 - 240V AC	V OUT	24V DC
I (A)	PSDIN2430 ⇨ 1,25 A PSDIN2445 ⇨ 1,88 A PSDIN2460 ⇨ 2,5 A	W	30 W 45 W 60 W
°C	-10 +60 °C		

PSDIN2430	Power supply on DIN rail 230V AC / 24V DC / 30W - 1,25A	0,3 kg	
PSDIN2445	Power supply on DIN rail 230V AC / 24V DC / 45W - 1,88A	0,3 kg	
PSDIN2460	Power supply on DIN rail 230V AC / 24V DC / 60W - 2,5A	0,3 kg	Customs code 85044090

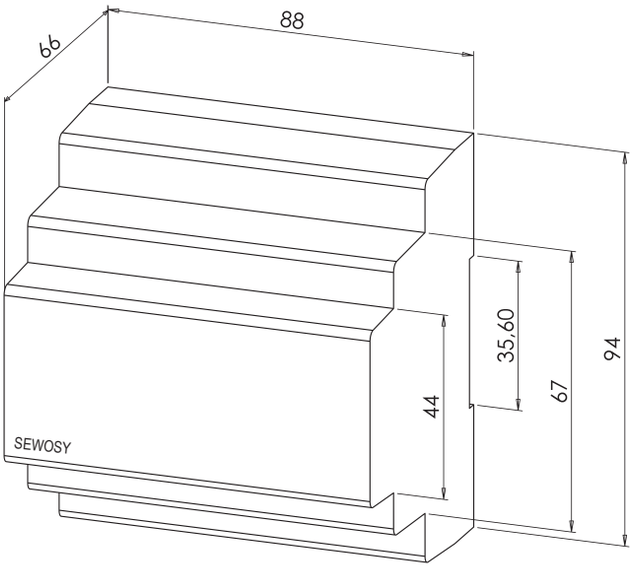

DIN RAIL MODULAR POWER SUPPLIES

48V DC - without battery backup

- Fit in electrical cabinets (5 modules)
- Double outputs (+/-)
- Protection by electronic fuse (PTC)
- LED mains presence
- Insulation class II

PSDIN4830

CHARACTERISTICS

Dimensions H x W x D	94 x 88 x 66 mm		
V IN	100 - 240V AC	V OUT	48V DC
I (A)	PSDIN4830 ⇨ 0,625 A PSDIN4845 ⇨ 0,94 A PSDIN4860 ⇨ 1,25 A	W	30 W 45 W 60 W
°C	-10 +60 °C		

PSDIN4830	Power supply on DIN rail 230V AC / 48V DC / 30W - 0,65A	0,3 kg	
PSDIN4845	Power supply on DIN rail 230V AC / 48V DC / 45W - 1A	0,3 kg	
PSDIN4860	Power supply on DIN rail 230V AC / 48V DC / 60W - 1,25A	0,3 kg	Customs code 85044090

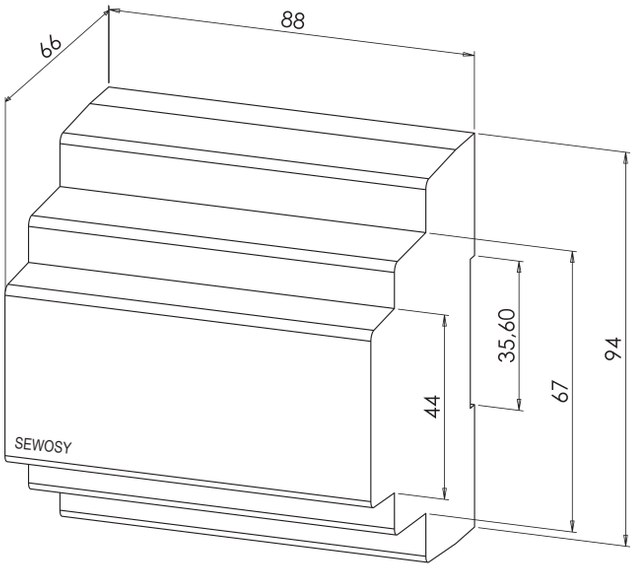

SINGLE OUTPUT 48-24V DC CONVERTER
MODULAR TRANSFORMER ON DIN RAIL

PSCONV4824

TR1224PTC

CHARACTERISTICS

Dimensions H x W x D	PSCONV4824	28,3 x 51,5 x 91,3 mm			
	TR1224PTC	85 x 52,5 x 58 mm			
V IN	PSCONV4824	48 VDC	V OUT	24V DC	
	TR1224PTC	230V AC		12-24V AC	
I (A)	PSCONV4824	0,625 A	W	15 W	
	TR1224PTC	1,25 A		15 W - 30 W	
°C	-10 +60 °C				

PSCONV4824	Single output 48-24VDC / 0.625 A converter max 15W	0,18 kg	Customs code 85044090
TR1224PTC	Transformer on DIN rail 230V AC / 12 V AC - 15W /24V AC - 30 W / 1,25A	0,5 kg	Customs code 85043121

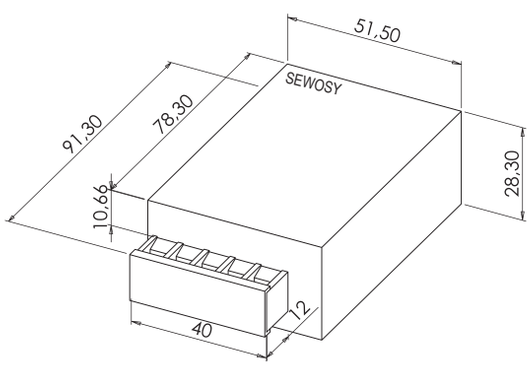

PSCONV4824

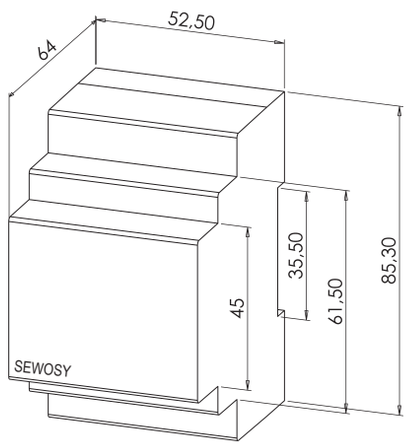

TR1224PTC

BATTERIES

12V DC

		VdS	
AC1.3-12	Battery 12 V DC / 1,3 Ah	G 111041	0,56 kg
AC2.4-12	Battery 12 V DC / 2.4 Ah	G 111042	0,9 kg
AC7-12	Battery 12 V DC / 7 Ah	G 113003	2,12 kg
AC18-12	Battery 12 V DC / 18 Ah	G 111045	5,3 kg
AC26-12	Battery 12 V DC / 26 Ah	G 111046	8 kg
AC40-12	Battery 12 V DC / 40 Ah	G 111047	13 kg

Customs code
850710

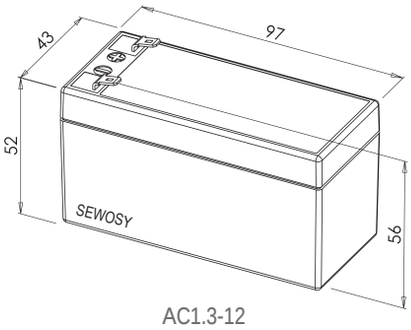

AC1.3-12

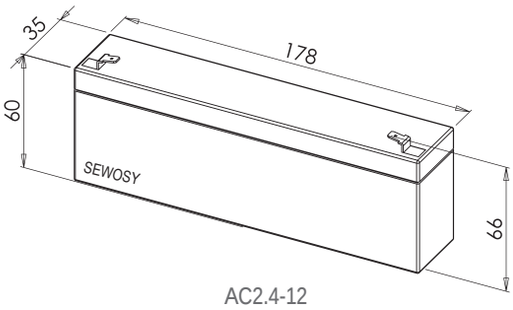

AC2.4-12

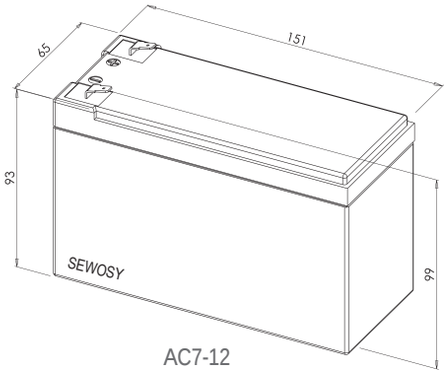

AC7-12

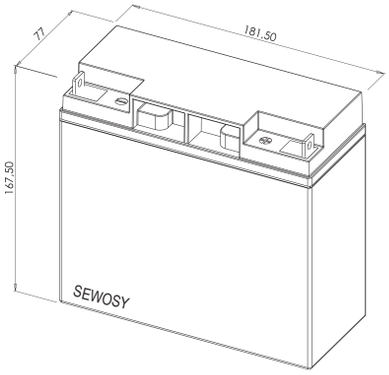

AC18-12

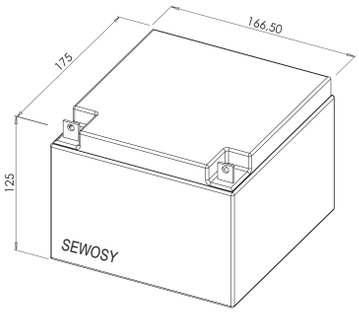

AC26-12

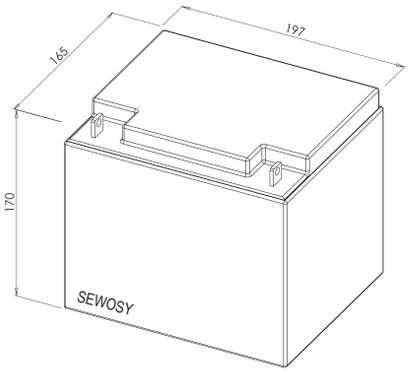

AC40-12

IN PRACTICE

In order to secure your installations against mains failure, their power supplies have to be backed up. But how long will the battery last?

Quick calculation method:

> First step: calculate precisely the consumption of the installation.

> Second step: use the following formula:

Ah ÷ A = x
x - 25% = Th

For example:

Battery capacity is **7 Ah** - Total consumption is **5A**.
The power supply will be backed up **1,05 hours**

Ah (capacity) ÷ A (total consumption in A) = x
x - 25% = Th (duration in hours)
That is: 7 ÷ 5 = 1,4 hours
1,4 - 25% = 1,05 hours

Conclusion:

Installation autonomy will be ensured during approximately **1 hour** if the battery is well loaded and maintained.

Example of voltage drop according to cable section and cable length

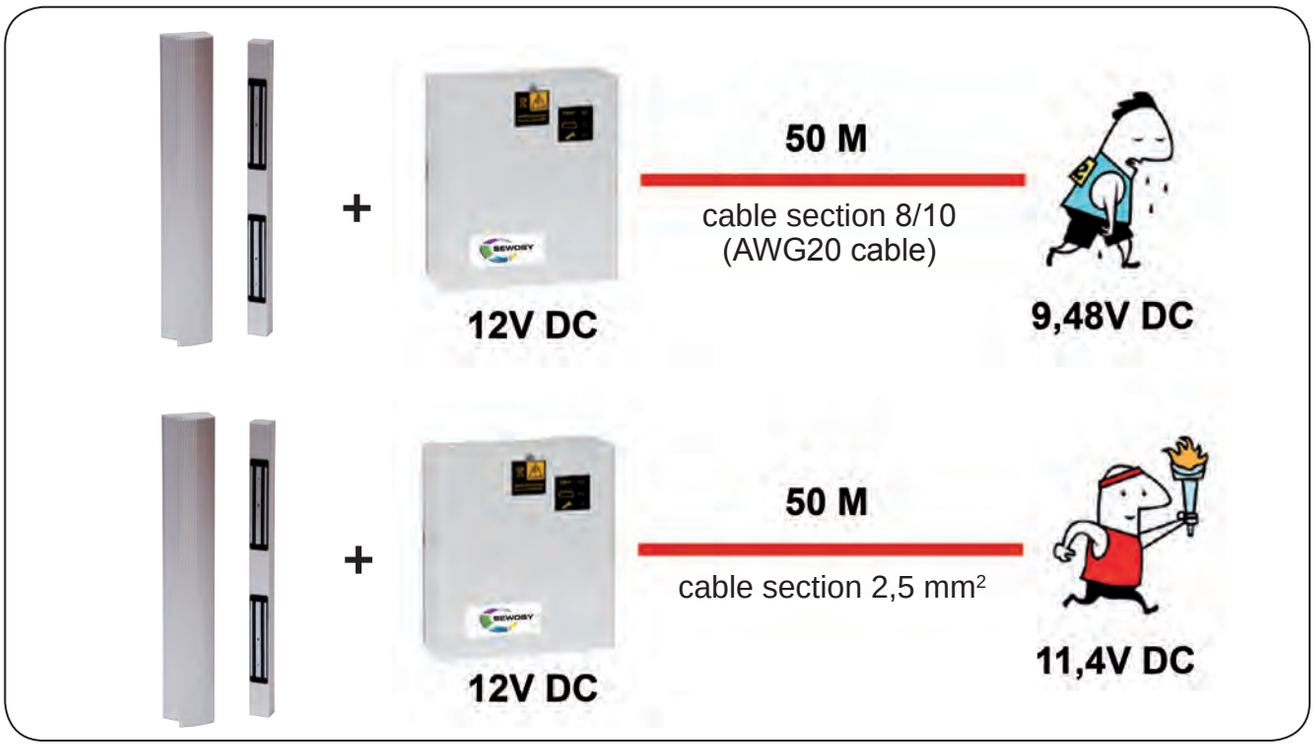

VARIOUS ACCESSORIES

CE

DIGITAL WEEKLY TIME CLOCKS

- DIN rail mounting
- 17 to 44 programs depending on model
- Display of 3 to 5 lines according to model
- Integrated battery backup

PTS71C

PTS72C

CHARACTERISTICS

Dimensions H x W x D	PTS71C PTS72C	87 x 36 x 48 mm 85,7 x 36 x 46 mm	
V IN	PTS71C ⇨ 230V AC PTS72C ⇨ 210-255V AC	V/A	250V AC-16A 250V AC-10A
°C	PTS71C ⇨ -10 +40° C PTS72C ⇨ -10 +50° C	IP	40

PTS71C	Digital weekly time clock 230V AC - 1 contact 17 programs	0,16 kg	
PTS72C	Digital weekly time clock 230V AC - 2 contacts 44 programs	0,2 kg	Customs code 91070000

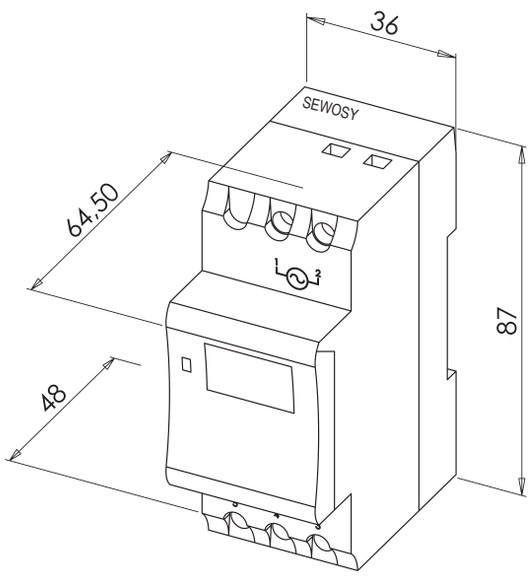

PTS71C

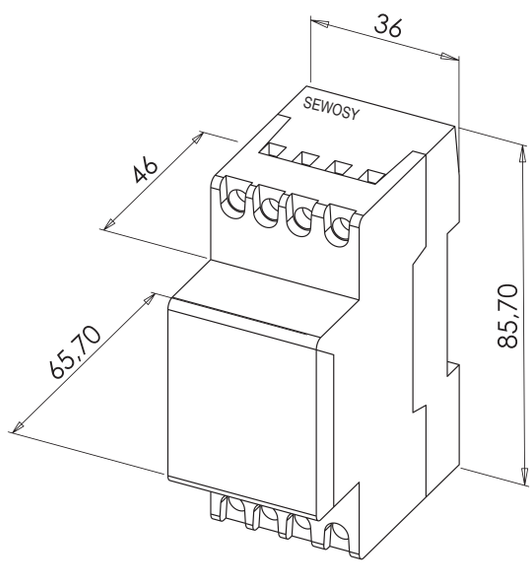

PTS72C

CURRENT TRANSMITTERS

- Possible maintaining of current passage
- Suitable for most profiles
- Connection by screw terminal block or welding

DC2

DC4

CHARACTERISTICS

Dimensions H x W x D	DC2 DC4	13 x 70 x 16,40 mm 20,1 x 86,2 x 22,05 mm

V/A	DC2 ⇨ 24V AC/DC-1,5 A DC4 ⇨ 24V AC/DC-0,5 A	°C	-10 +60 °C

DC2	Current transmitter 2 pins 24V AC/DC 1,5A	0,02 kg	
DC4	Current transmitter 4 pins 24V AC/DC 0,5A	0,06 kg	Customs code 83079000

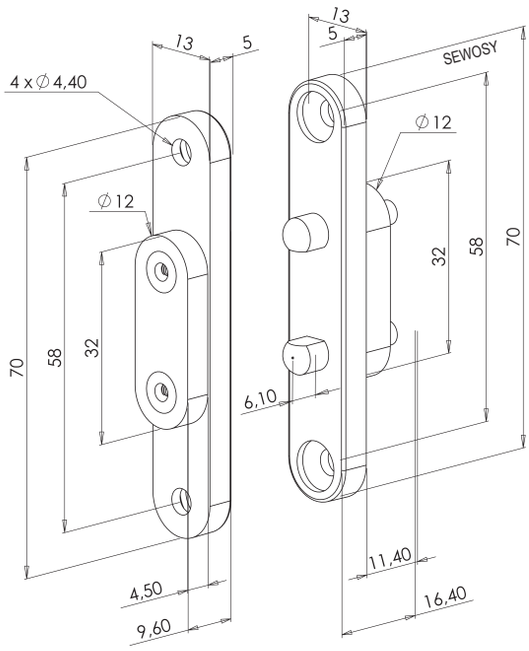

DC2

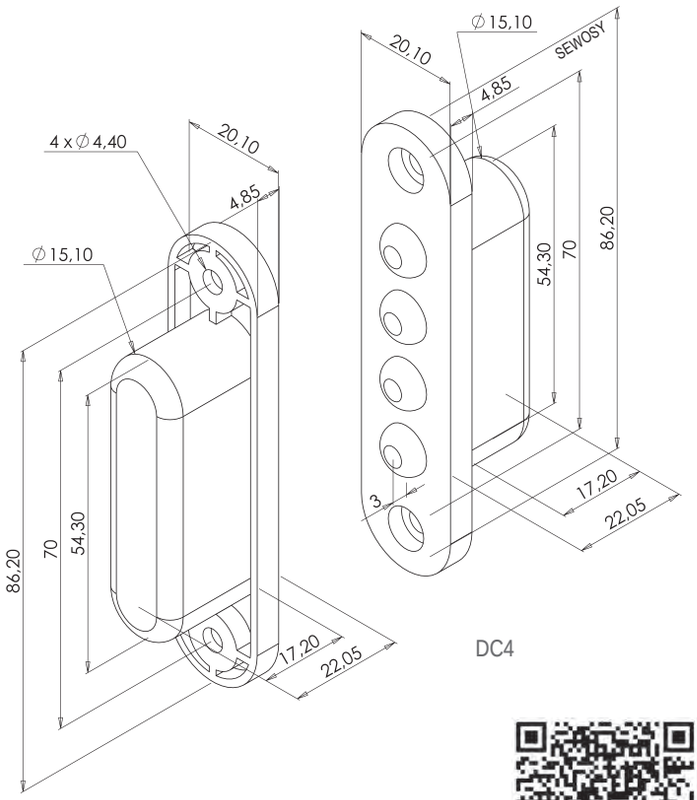

DC4

TIMER WITH SHRINK TUBE
"SMART" TIMER
RELAY MODULE

TPNC

PTM1224

RM61224

CHARACTERISTICS

Dimensions H x W x D	TPNC PTM1224 RM61224	28,61 x 62,74 x 13,60 mm 73,20 x 63,30 x 18 mm 48 x 70 x 23,50 mm		
V OUT	TPNC ⇨	12-24V DC	ImA DC	-
	PTM1224 ⇨	12-24V DC		50 mA max.
	RM61224 ⇨	6-12-24V DC		70 mA
V/A	TPNC ⇨	24V DC-10 A	T s	5 - 60 s
	PTM1224 ⇨	24V DC-8 A 120V AC-8 A		1 - 3600 s
	RM61224 ⇨	30V DC-5 A 230V AC-5 A		-
°C	-10 +60 °C			

TPNC	Timer 12/24V DC with shrink tube - 1 contact NC 5-60 sec	0,016 kg	
PTM1224	Smart time delay board 12-24V DC / 5 programs	0,06 kg	
RM61224	Relay module 6-12-24V DC - 2 contacts	0,08 kg	Customs code 853180

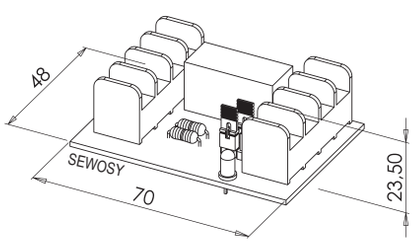

RM61224

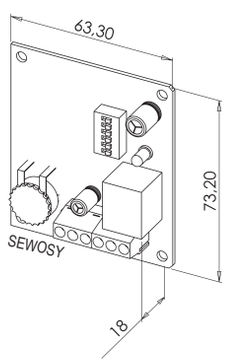

PTM1224

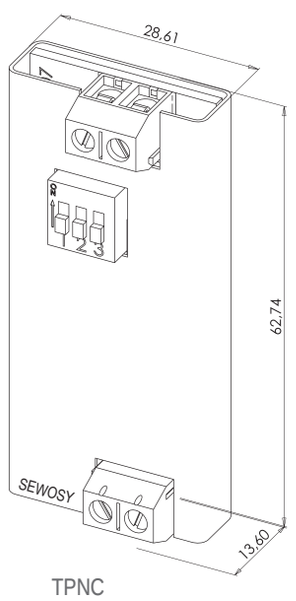

TPNC

DOOR LOOPS AND CABLE LINKS

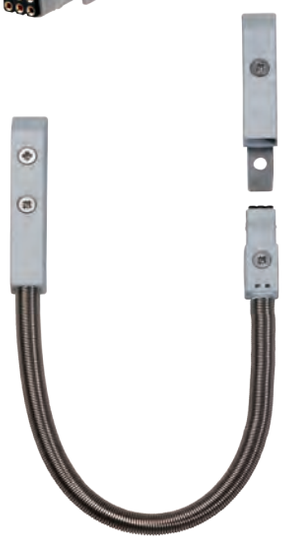

- Zamak end caps, various finishes
- Comes with loop clamps (surface mounted models)
- Telescopic mortice housing

SURFACE-MOUNT DOOR LOOPS

stainless steel loops

- End caps in Zamak nickel finishing
- Integrated door loop holding piece
- Different lengths available
- Fixing screws provided

DLI7

CHARACTERISTICS

Product number	Dimensions H x W x D	°C
DLI7/30	300 x 7 mm	-10 +60 °C
DLI7	500 x 7 mm	
ECRLI7	42,5 x 28 x 14 mm	
DLI10	500 x 10 mm	
ECRLI10	48 x 32 x 16 mm	

DLI7/30	Stainless steel door loop 30 cm diameter 9/7 mm	0,1 kg	
DLI7	Stainless steel door loop 50 cm diameter 9/7 mm	0,1 kg	
RLI7	Stainless steel door loop 10 m roll diameter 9/7 mm	0,6 kg	
ECRLI7	Nickel-plated end caps for RLI7 Pack of 20	0,6 kg	
DLI10	Stainless steel door loop 50 cm diameter 13/10 mm	0,1 kg	
RLI10	Stainless steel door loop 10 m roll diameter 13/10 mm	0,8 kg	
ECRLI10	Nickel-plated end caps for RLI10 Pack of 20	0,7 kg	Customs code 83071000

DLI7

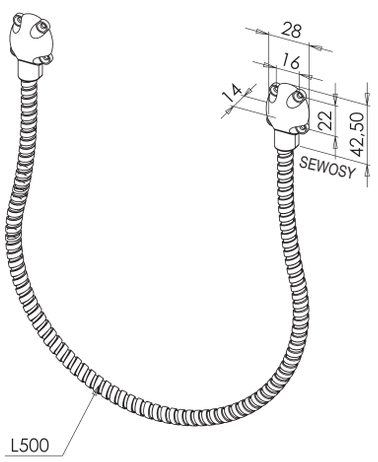

DLI10

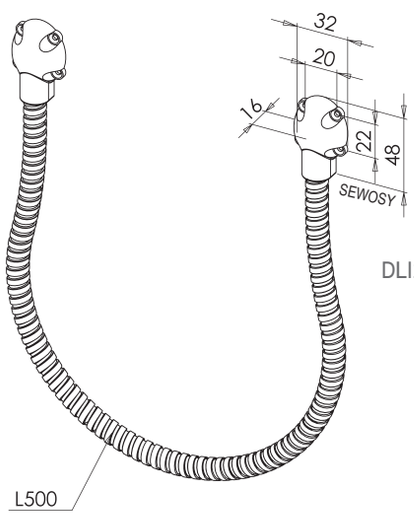

SURFACE-MOUNT DOOR LOOPS

white loops

- End caps in Zamak white finishing
- Integrated door loop holding piece
- Different lengths available
- Fixing screws provided

DLB7

CHARACTERISTICS

Product number	Dimensions H x W x D	°C
DLB7	500 x 7 mm	-10 +60 °C
ECRLB7	42,5 x 28 x 14 mm	
DLB10	500 x 10 mm	
ECRLB10	48 x 32 x 16 mm	

DLB7	White door loop 50 cm diameter 9/7 mm	0,15 kg	
RLB7	White door loop 10 m roll diameter 9/7 mm	0,9 kg	
ECRLB7	White end caps for RLB7 Pack of 20	0,6 kg	
DLB10	White door loop 50 cm diameter 13/10 mm	0,15 kg	
RLB10	White door loop 10 m roll diameter 13/10 mm	1,1 kg	
ECRLB10	White end caps for RLB10 Pack of 20	0,7 kg	Customs code 83071000

DLB7

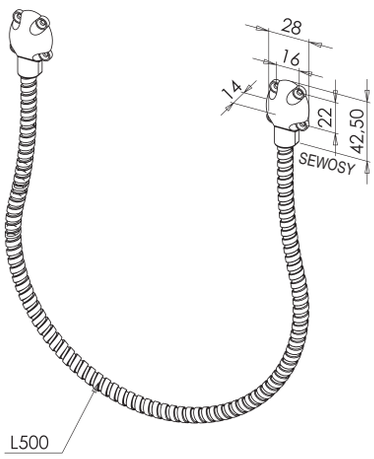

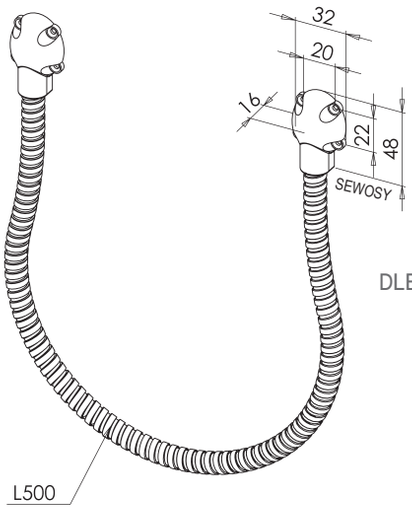

DLB10

SURFACE-MOUNT DOOR LOOPS

black loops

- End caps in Zamak black finishing
- Integrated door loop holding piece
- Different lengths available
- Fixing screws provided

DLN7

CHARACTERISTICS

Product number	Dimensions H x W x D	°C
DLN7	500 x 7 mm	-10 +60 °C
ECRLN7	42,5 x 28 x 14 mm	
DLN10	500 x 10 mm	
ECRLN10	48 x 32 x 16 mm	

DLN7	Black door loop 50 cm diameter 9/7 mm	0,15 kg	
RLN7	Black door loop 10 m roll diameter 9/7 mm	0,9 kg	
ECRLN7	Black end caps for RLN7 Pack of 20	0,6 kg	
DLN10	Black door loop 50 cm diameter 13/10 mm	0,15 kg	
RLN10	Black door loop 10 m roll diameter 13/10 mm	1,1 kg	
ECRLN10	Black end caps for RLN10 Pack of 20	0,7 kg	Customs code 83071000

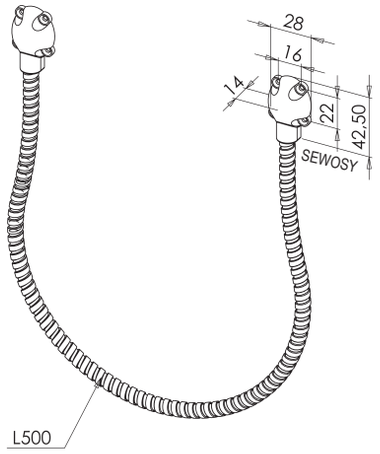

DLN7

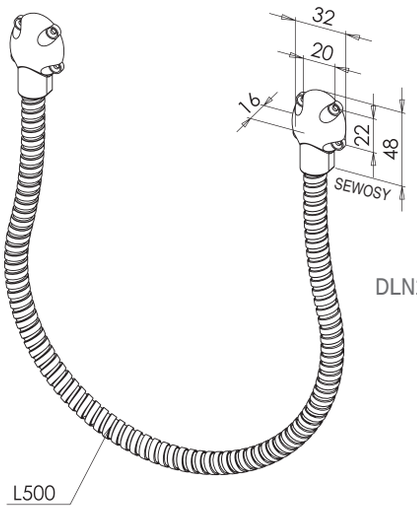

DLN10

SURFACE-MOUNT DOOR LOOPS

reinforced stainless steel loops

- Reinforced door loop
- Symmetric fixing holes (DLRI10EC version)
- End caps in Zamak nickel finition
- Integrated door loop holding piece
- Fixing screws provided

DLRI10

DLRI10EC

CHARACTERISTICS

Product number	Dimensions H x W x D	°C
DLRI10	500 x 10 mm	-10 +60 °C
DLRI10EC	500 x 10 60,5 x 47 x 17 mm	

DLRI10	Reinforced stainless steel door loop 50 cm diameter 13/10 mm	0,15 kg	
DLRI10EC	Reinforced stainless steel door loop 50 cm diameter 13/10 mm - square end caps	0,25 kg	Customs code 83071000

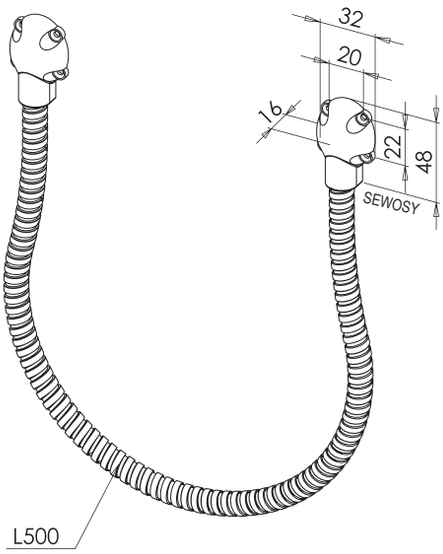

DLRI10

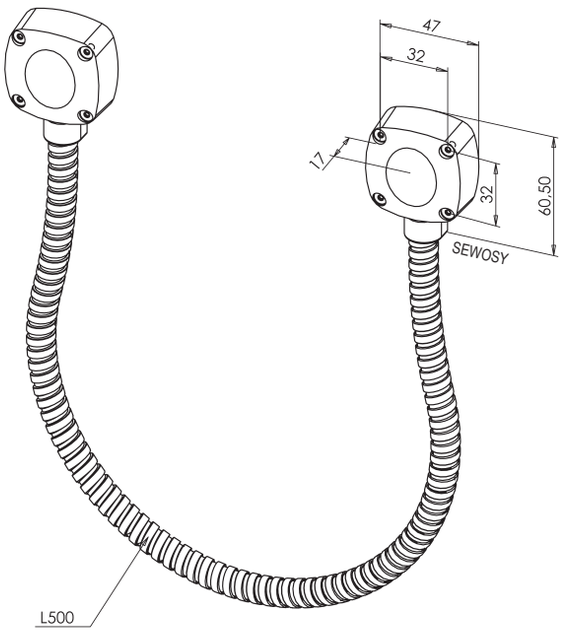

DLRI10EC

ADJUSTABLE CABLE LINKS

mortise-mount

- Telescopic housing suitable for majority of profiles
- Stainless steel finishing
- Fixing screws provided

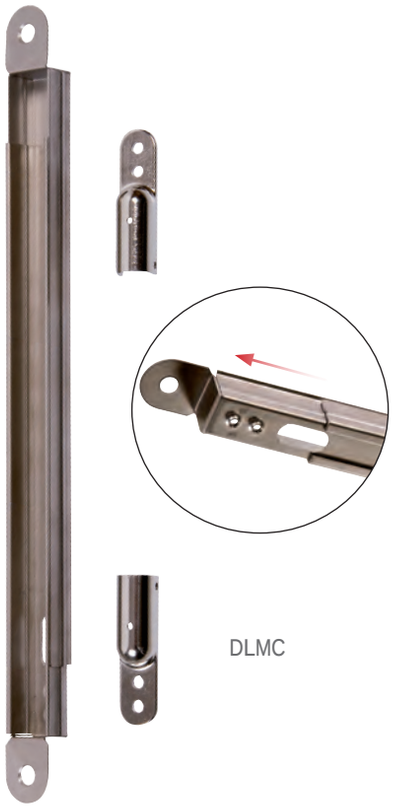

DLMC

CHARACTERISTICS

Product number	Dimensions H x W x D	°C
DLMC	min. 314 x 24 x 18,5 / max. 534 x 24 x 18,5 mm	-10 +60 °C
DLS170	10,2 x 170 mm	
DLS210	10,2 x 210 mm	
DLS390	10,2 x 390 mm	

DLMC	Adjustable mortise casing from 260 to 480 mm	0,33 kg	
DLS170	Spring 170 mm - opening angle up to 90°	0,07 kg	
DLS210	Spring 210 mm - opening angle up to 110°	0,09 kg	
DLS390	Spring 390 mm - opening angle up to 180°	0,17 kg	Customs code 83071000

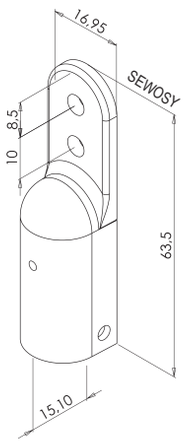

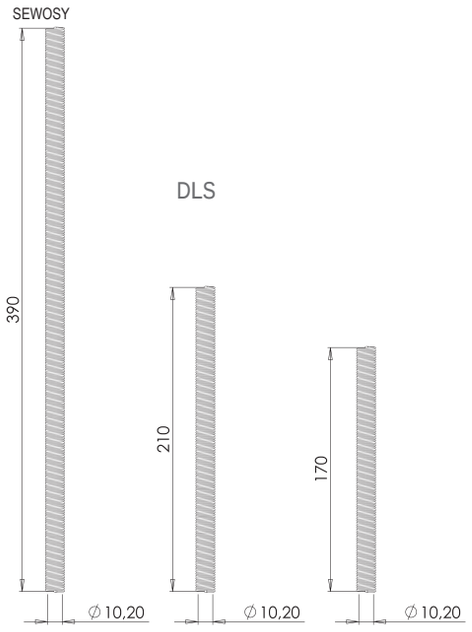

180° 110° 90°

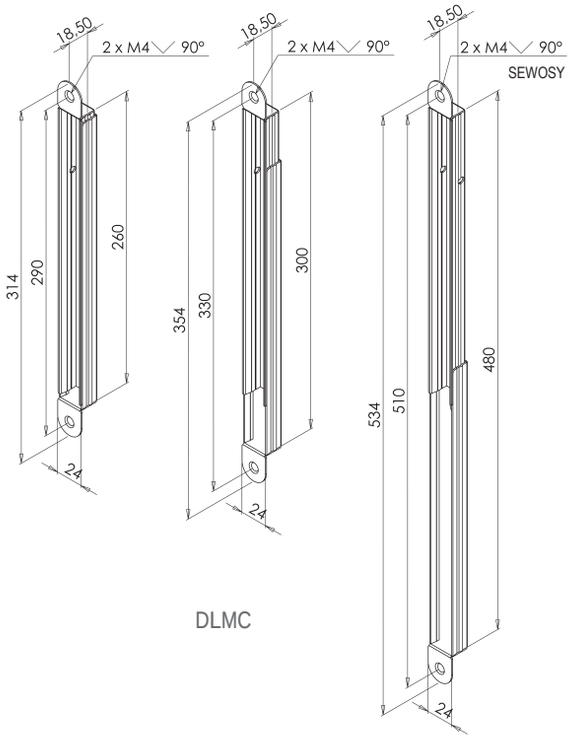

DLMC

ADJUSTABLE CABLE LINKS

mortise-mount - complete kit

- Comprises the housing, the spring and the fixing screws
- Adjustable housing suitable for most uses
- Stainless steel finishing

DLMC170

CHARACTERISTICS

Product number	Dimensions H x W x D	°C
DLMC170	314 x 24 x 18,5 mm 10,2 x 170 mm	-10 +60 °C
DLMC210	354 x 24 x 18,5 mm 10,2 x 210 mm	
DLMC390	534 x 24 x 18,5 mm 10,2 x 390 mm	

DLMC170	Mortise adjustable door loop + spring 170 mm opening angle up to 90°	0,5 kg	
DLMC210	Mortise adjustable door loop + spring 210 mm opening angle up to 110°	0,5 kg	
DLMC390	Mortise adjustable door loop + spring 390 mm opening angle up to 180°	0,5 kg	Customs code 83071000

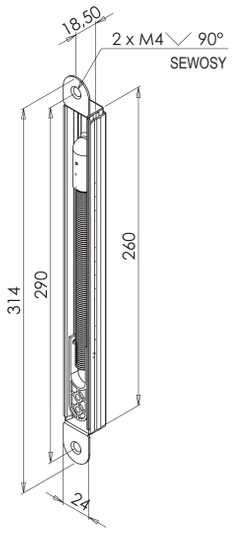

90°

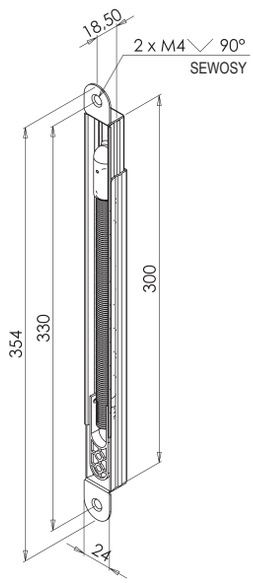

110°

180°

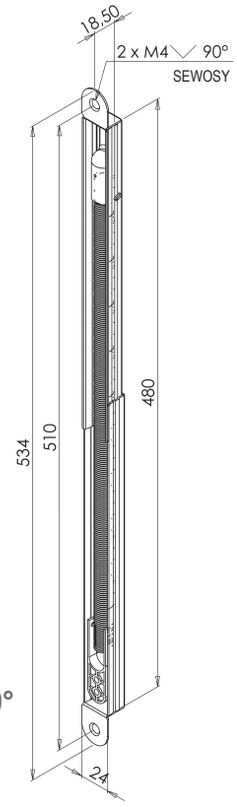

CABLE LINKS

surface-mount - pluggable - miniature

- Easy removal of openings
- Fit in most rabbets
- 6 integrated conductors

NLM-13-30-1-2M

CHARACTERISTICS

Dimensions H x W x D	NLM-13-30-1-2M NLM-13-30-4-6M		200 x 10,40 x 8,5 mm
V/A	48V DC-2A	IP	67
°C	-10 +60 °C		2 x 0,34 mm² red/blue 4 x 0,14 mm² white/brown green/yellow

NLM-13-30-1-2M	Pluggable miniature cable link with 6 pin pluggable connection Cable: socket = 1 m - plug = 2 m	0,2 kg	
NLM-13-30-4-6M	Pluggable miniature cable link with 6 pin pluggable connection Cable: socket = 4 m - plug = 6 m	0,4 kg	Customs code 83071000

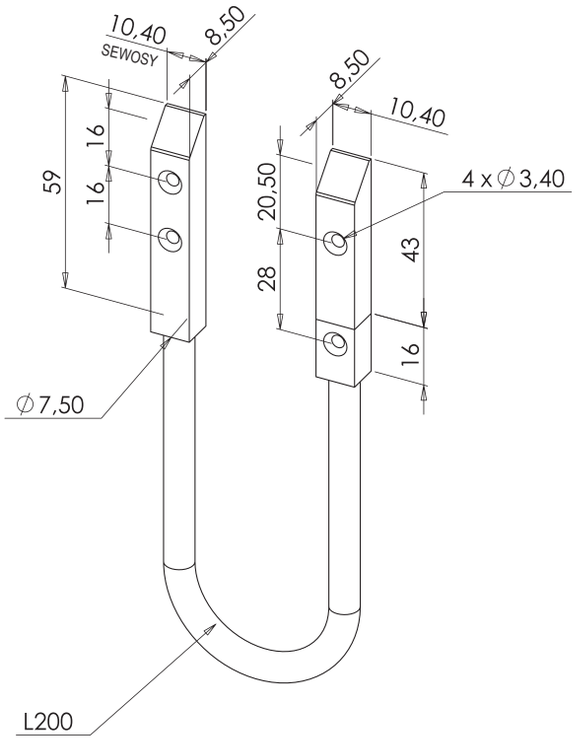

CABLE LINKS

mortise-mount - pluggable

- Easy removal of doors
- 8 integrated conductors

NLM-12-91-1-2M

CHARACTERISTICS

Dimensions H x W x D	NLM-12-91-1-2M NLM-12-91-3-6M	498 x 24 x 17,5 mm	
V/A	48V DC-2,5A	IP	67
°C	-10 +60 °C		8 x 0,34 mm² blue/red/grey pink/yellow/green brown/white

NLM-12-91-1-2M	Pluggable concealed cable link Cable: socket = 2 m - plug = 1 m	0,7 kg	
NLM-12-91-3-6M	Pluggable concealed cable link Cable: socket = 6 m - plug = 3 m	1,2 kg	Customs code 83071000

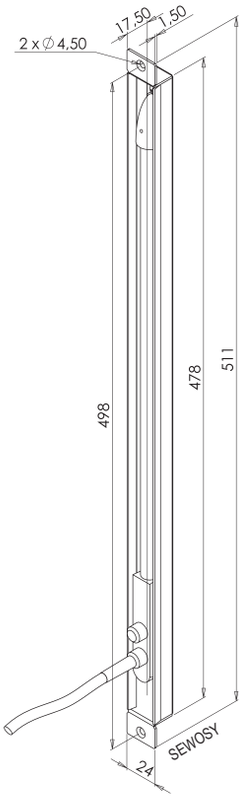

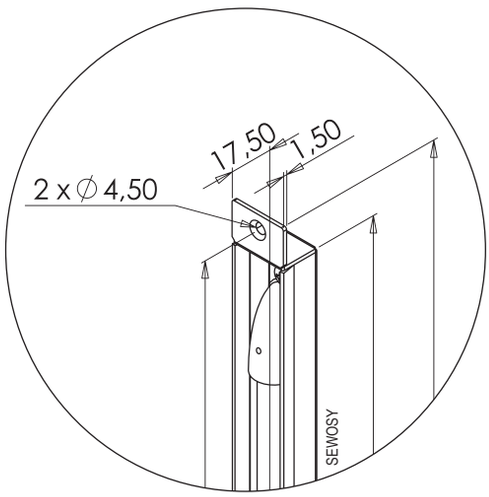

Logistics,
at the cutting edge of efficiency

- Organized team for maximum reactivity
- Stock of more than 10% of sales
- Average delivery time within 48h all over Europe

POSITION CONTACTS

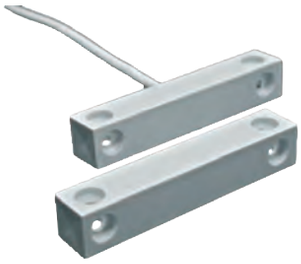

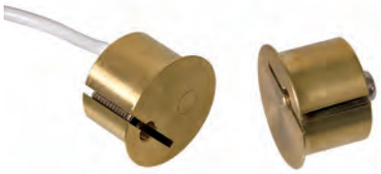

- Contact by means of REED sensor or switch
- Adjustment of door opening detection (NLEX model)
- Front or standard fastening (NL100 and DBC models)

ROLLER BALL CONTACTS

made of ABS

- Contact through REED sensor
- Integrated scaper of 2,5 mm
- Other cable length on demand

MS918_AW50

MS918/AT

CHARACTERISTICS

Product number	Dimensions H x W x D	V/A	°C	IP	mm
MS918/AW50	44,50 x 25,50 x 23,70 mm / Ø: 18,50 mm	200V DC-0,5 A	-20 +70 °C	68	6,5 mm
MS918/CW4	44,50 x 25,50 x 23,70 mm / Ø: 18,50 mm	100V DC-0,25 A			
MS918/AT	44,50 x 25,50 x 39,20 mm / Ø: 18,50 mm	200V DC-0,5 A			

MS918/AW50	ABS Roller ball contact 2 wires 50 cm (NO)	0,02 kg	
MS918/CW4	ABS Roller ball contact 3 wires 4 m (changeover)	0,1 kg	
MS918/AT	ABS 2 screws terminal magnetic contact (NO)	0,01 kg	Customs code 85365011

MS918/AW50
MS918/CW4

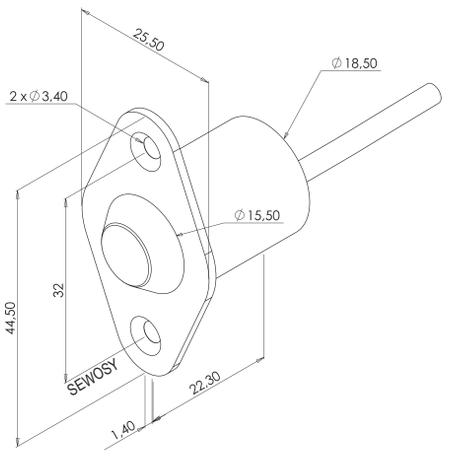

MS918/AT

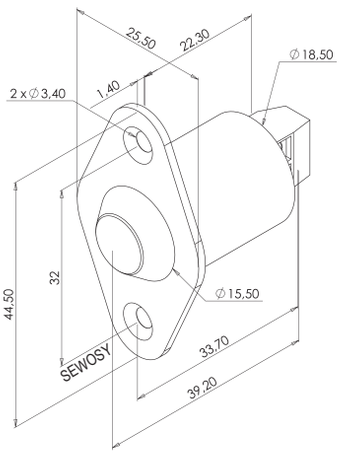

ROLLER BALL CONTACTS

metal body

- Contact through switch
- Stainless steel finishing
- Accurate setting of opening door detection
- Ideal for heavy doors

CBPCFC4

CBPCF

CHARACTERISTICS

Product number	Dimensions H x W x D	Ø mm	V/A	IP	ball sliding distance	contact body adjustment
CBPCFC4	55 x 26 x 28,50 mm	18 mm	250V AC-3 A	40	min. 2,7 mm	max. 13 mm
CBPCF	55 x 26 x 36,50 mm					

CBPCFC4	Roller ball metal contact - changeover contact 4 m cable	0,18 kg	
CBPCF	Roller ball metal contact - changeover contact	0,04 kg	Customs code 85365011

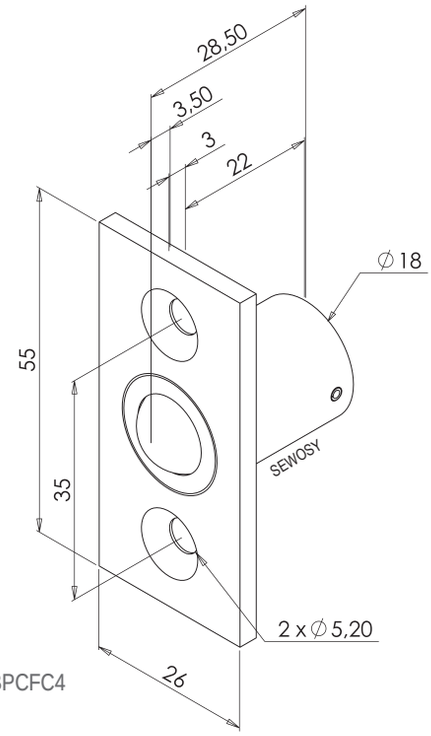

CBPCFC4

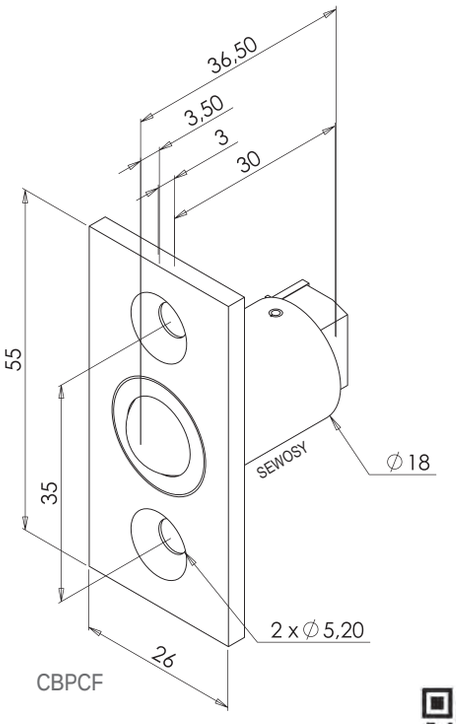

CBPCF

CYLINDRICAL MORTISE-MOUNT MAGNETIC CONTACTS

for wood

- Contact through REED sensor
- Ribbed body providing enhanced stability
- Other cable length on demand

MS915/AW2

MS915MS

MS915/AT

CHARACTERISTICS

Product number	Dimensions H x W x D	V/A	°C	IP	mm
MS915/AW2	9 x 19,4 mm	200V DC-0,5 A	-20 +70 °C	68	12 mm
MS915/CW2	9 x 23,7 mm	100V DC-0,25 A			
MS915/ALW2	9 x 19,4 mm	200V DC-0,5 A			
MS915/CLW2	9 x 23,7 mm	100V DC-0,25 A			
MS915/AT	9 x 28 mm	200V DC-0,5 A			
MS915MS	19 x 14,15 mm		-20 +70 °C	68	

MS915/AW2	Mortise cylindrical magnetic contact 2 wires 2 m for wood (NO)	0,06 kg
MS915/CW2	Mortise cylindrical magnetic contact 3 wires 2 m for wood (changeover)	0,06 kg
MS915/ALW2	Mortise cylindrical magnetic contact 4 wires 2 m for wood (NO + loop)	0,06 kg
MS915/CLW2	Mortise cylindrical magnetic contact 5 wires 2 m for wood (changeover + loop)	0,1 kg
MS915/AT	2 screws terminal cylindrical magnetic contact for wood (NO)	0,01 kg
MS915MS	Mounting support for MS915 range	0,01 kg

Customs code
85365011

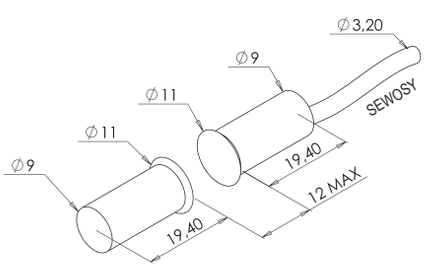

MS915/AW2
MS915/ALW2

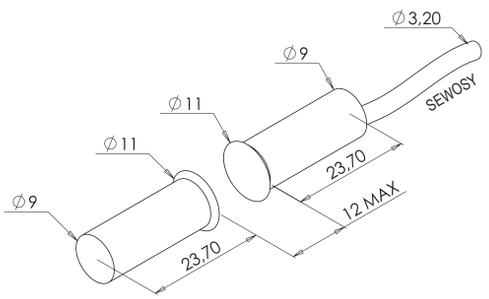

MS915/CW2
MS915/CLW2

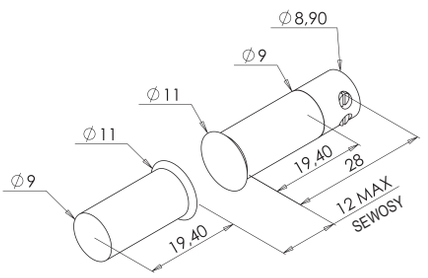

MS915/AT

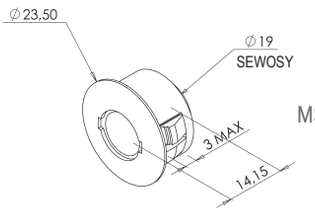

MS915MS

CYLINDRICAL MORTISE-MOUNT MAGNETIC CONTACTS

for metal

- Contact through REED sensor
- Integrated fixing clips
- Other cable length on demand

MS916/AW2

MS916/AT

CHARACTERISTICS

Product number	Dimensions H x W x D	V/A	°C	IP	mm
MS916/AW2	19 x 27,3 mm	200V DC-0,5 A	-20 +70 °C	68	35 mm
MS916/CW2	19 x 27,3 mm	100V DC-0,25 A			
MS916/ALW2	19 x 27,3 mm	200V DC-0,5 A			
MS916/CLW2	19 x 27,3 mm	100V DC-0,25 A			
MS916/AT	19 x 37,3 mm	200V DC-0,5 A			

MS916/AW2	Mortise cylindrical magnetic contact 2 wires 2 m for metal door (NO)	0,08 kg	
MS916/CW2	Mortise cylindrical magnetic contact 3 wires 2 m for metal door (changeover)	0,08 kg	
MS916/ALW2	Mortise cylindrical magnetic contact 4 wires 2 m for metal door (NO + loop)	0,08 kg	
MS916/CLW2	Mortise cylindrical magnetic contact 5 wires 2 m for metal door (changeover + loop)	0,08 kg	
MS916/AT	2 screws terminal cylindrical magnetic contact for metal door (NO)	0,03 kg	Customs code 85365011

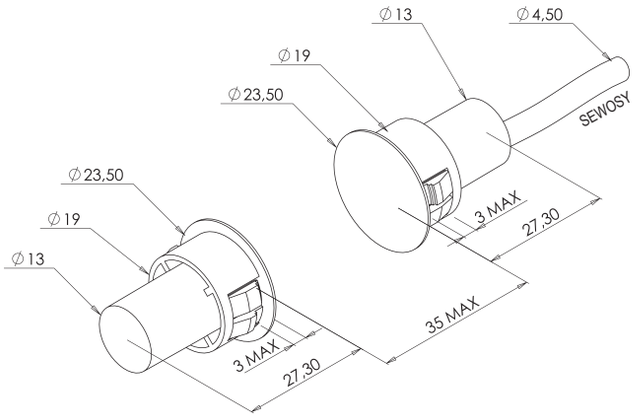

MS916/AW2
MS916/CW2
MS916/ALW2
MS916/CLW2

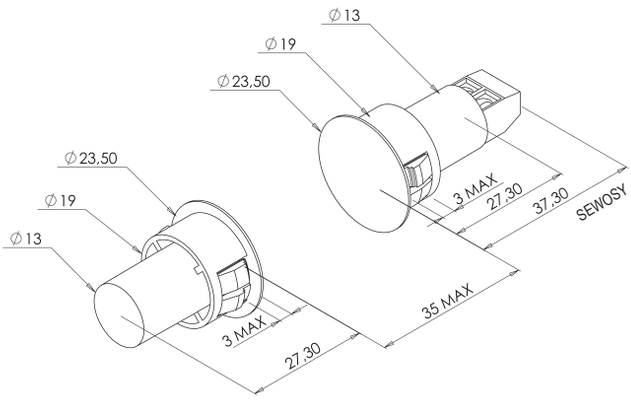

MS916/AT

CYLINDRICAL MORTISE-MOUNT MAGNETIC CONTACTS

with magnet

- Contact through REED sensor
- Front or side detection
- Other cable length on demand
- Optional magnet for special implementation

NL100 10 35 A KP

NL10059MD

CHARACTERISTICS

Product number	Dimensions H x W x D	V/A	°C	IP	latérale	frontale
NL100 10 35 A KP	6 x 30 mm	200V DC-0,5 A	-20 +70 °C	68	24 mm	16 mm
NL100 10 33 C KP	6 x 30 mm	30V DC-0,2 A			18 mm	13 mm
NL100 10 34 A KP	6 x 30 mm	200V DC-0,5 A			24 mm	16 mm
NL100 10 30 C KP	6 x 30 mm	30V DC-0,2 A			18 mm	13 mm
NL10059MD	10 x 3 mm	-			-	-

NL100 10 35 A KP	Mortise cylindrical magnetic contact 2 wires 2 m VdS (NO)	VdS	0,06 kg	
NL100 10 33 C KP	Mortise cylindrical magnetic contact 3 wires 2 m (changeover)		0,02 kg	
NL100 10 34 A KP	Mortise cylindrical magnetic contact 4 wires 2 m VdS (NO + loop)	VdS	0,04 kg	
NL100 10 30 C KP	Mortise cylindrical magnetic contact 5 wires 2 m VdS (changeover + loop)	VdS	0,06 kg	Customs code 85365011
NL10059MD	Screwed button magnet diameter 10 mm / thickness 3 mm		0,01 kg	Customs code 85051990

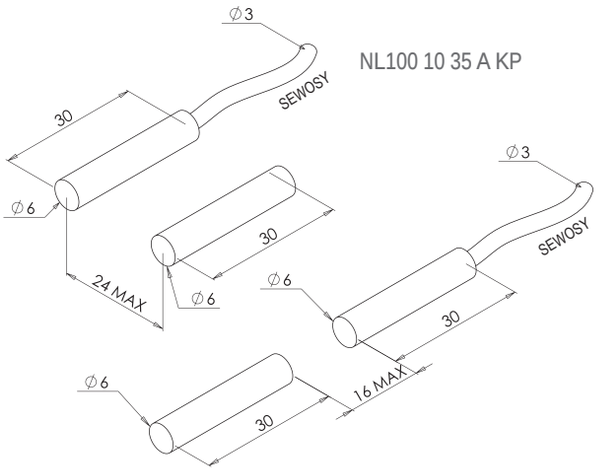

NL100 10 35 A KP

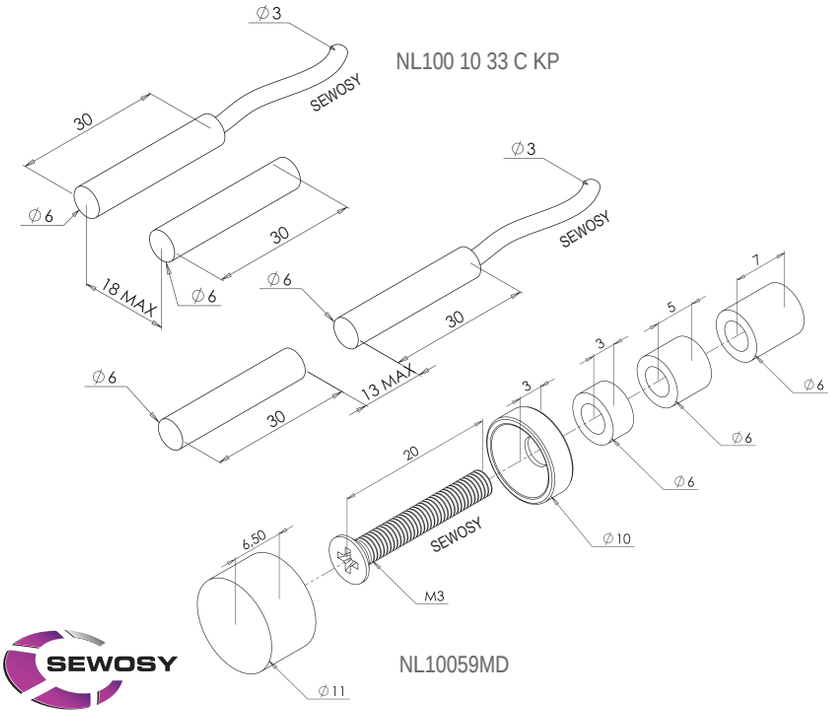

NL100 10 33 C KP

NL10059MD

ECCENTRIC MORTISE-MOUNT MAGNETIC CONTACTS

white ABS body

- Adjustment of door opening detection
- Contact through REED sensor
- No visible fixing screw

NLEXB-15-2-04

CHARACTERISTICS

Product number	Dimensions H x W x D	V/A	°C	IP	mm
NLEXB-15-2-04	14,90 X 19,50 mm	100V DC-0,5 A	-20 +70 °C	68	12 mm
NLEXB-15-3-04	14,90 X 19,50 mm	30V DC-0,2 A			
NLEXB-15-4-04	14,90 X 19,50 mm	100V DC-0,5 A			
NLEXB-15-5-04	14,90 X 19,50 mm	30V DC-0,2 A			
NLEXB-20-3-04	19,80 x 19,50 mm	30V DC-0,2 A			
NLEXB-20-4-04	19,80 x 19,50 mm	100V DC-0,5 A			

NLEXB-15-2-04	Mortise eccentric magnetic contact 14.9 mm white 2 wires (NO)		0,06 kg
NLEXB-15-3-04	Mortise eccentric magnetic contact 14.9 mm white 3 wires (changeover)		0,06 kg
NLEXB-15-4-04	Mortise eccentric magnetic contact 14.9 mm white 4 wires (NO + loop) VdS	VdS	0,08 kg
NLEXB-15-5-04	Mortise eccentric magnetic contact 14.9 mm white 5 wires (changeover + loop) VdS	VdS	0,06 kg
NLEXB-20-3-04	Mortise eccentric magnetic contact 19.8 mm white 3 wires (changeover)		0,04 kg
NLEXB-20-4-04	Mortise eccentric magnetic contact 19.8 mm white 4 wires (NO + loop) VdS	VdS	0,1 kg

Customs code
85365011

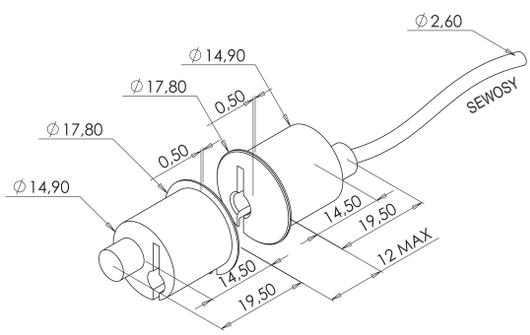

NLEXB-15-2-04 NLEXB-15-3-04 NLEXB-15-4-04

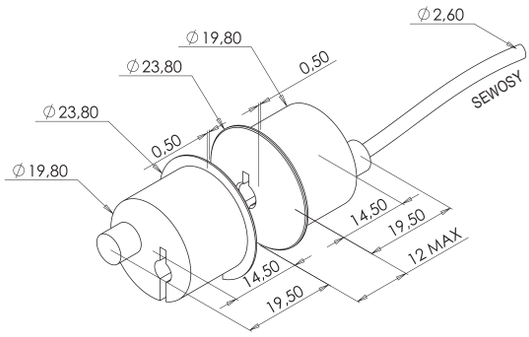

NLEXB-20-3-04
NLEXB-20-4-04

ECCENTRIC MORTISE-MOUNT MAGNETIC CONTACTS

brass body

- Adjustment of door opening detection
- Contact through REED sensor
- No visible fixing screw

NLEXDMC-20-2-04

CHARACTERISTICS

Product number	Dimensions H x W x D	V/A	°C	IP	mm
NLEXDMC-15-2-04	14,90 x 19,50 mm	100V DC-0,5 A	-20 +70 °C	68	12 mm
NLEXDMC-15-3-04	14,90 x 19,50 mm	30V DC-0,2 A			
NLEXDMC-15-4-04	14,90 x 19,50 mm	100V DC-0,5 A			
NLEXDMC-20-2-04	19,80 x 19,50 mm	100V DC-0,5 A			
NLEXDMC-20-3-04	19,80 x 19,50 mm	30V DC-0,2 A			
NLEXDMC-20-4-04	19,80 x 19,50 mm	100V DC-0,5 A			
NLEXDMC-20-5-04	19,80 x 19,50 mm	30V DC-0,2 A			

NLEXDMC-15-2-04	Mortise eccentric magnetic contact 14.9 mm brass 2 wires (NO)	0,11 kg
NLEXDMC-15-3-04	Mortise eccentric magnetic contact 14.9 mm brass 3 wires (changeover)	0,08 kg
NLEXDMC-15-4-04	Mortise eccentric magnetic contact 14.9 mm brass 4 wires (NO + loop)	0,11 kg
NLEXDMC-20-2-04	Mortise eccentric magnetic contact 19.8 mm brass 2 wires (NO)	0,12 kg
NLEXDMC-20-3-04	Mortise eccentric magnetic contact 19.8 mm brass 3 wires (changeover)	0,12 kg
NLEXDMC-20-4-04	Mortise eccentric magnetic contact 19.8 mm brass 4 wires (NO + loop)	0,12 kg
NLEXDMC-20-5-04	Mortise eccentric magnetic contact 19.8 mm brass 5 wires (changeover + loop)	0,16 kg

Customs code
85365011

NLEXDMC-15-2-04
NLEXDMC-15-3-04
NLEXDMC-15-4-04

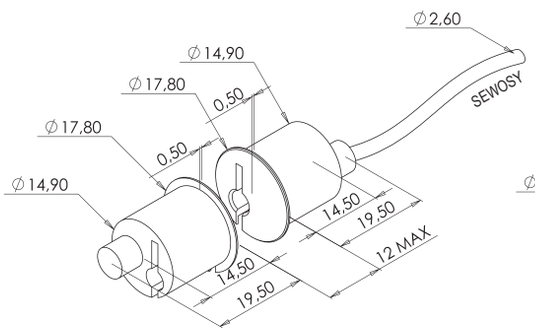

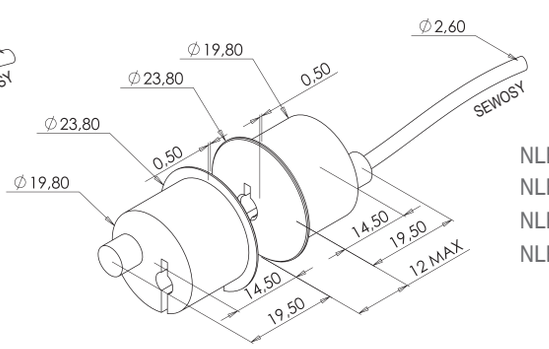

NLEXDMC-20-2-04
NLEXDMC-20-3-04
NLEXDMC-20-4-04
NLEXDMC-20-5-04

SURFACE-MOUNT MAGNETIC CONTACTS

rectangular

- Contact through REED sensor
- Other cable length on demand

MS910/AW2

MS908/AT

CHARACTERISTICS

Product number	Dimensions H x W x D	V/A	°C	IP	mm
MS910/AW2	10,50 x 50,50 x 11 mm	200V DC-0,5 A	-20 +70 °C	68	16 mm
MS910/CW2	10,50 x 50,50 x 11 mm	100V DC-0,25 A			
MS910/ALW2	10,50 x 50,50 x 11 mm	200V DC-0,5 A			
MS910/CLW2	10,50 x 50,50 x 11 mm	100V DC-0,25 A			
MS908/AT	12,80 x 55 x 12,30 mm	200V DC-0,5 A	-20 +70 °C	68	19 mm

MS910/AW2	Surface rectangular magnetic contact 2 wires 2 m (NO)	0,06 kg	
MS910/CW2	Surface rectangular magnetic contact 3 wires 2 m (changeover)	0,06 kg	
MS910/ALW2	Surface rectangular magnetic contact 4 wires 2 m (NO + loop)	0,06 kg	
MS910/CLW2	Surface rectangular magnetic contact 5 wires 2 m (changeover + loop)	0,1 kg	
MS908/AT	2 screws terminal surface rectangular magnetic contact (NO)	0,02 kg	Customs code 85365011

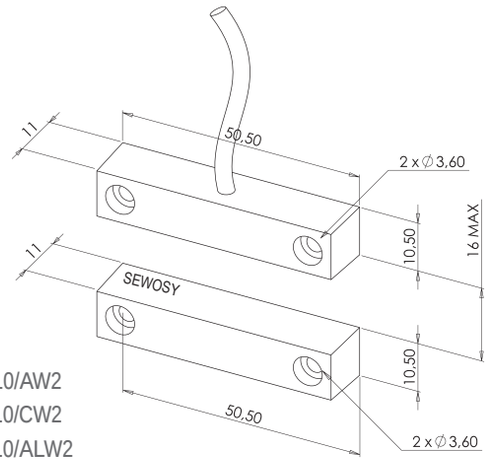

MS910/AW2
MS910/CW2
MS910/ALW2
MS910/CLW2

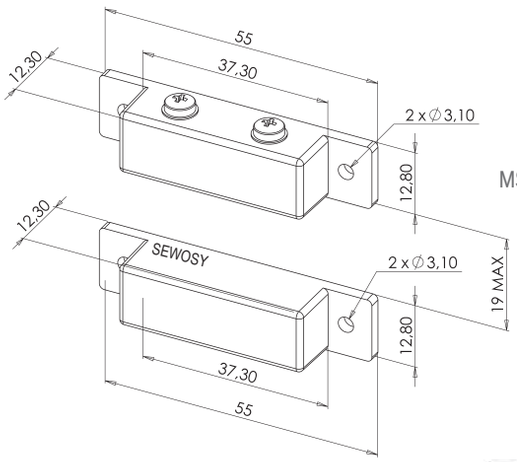

MS908/AT

SURFACE-MOUNT MAGNETIC CONTACTS

rectangular - with screws kit

- Front or standard fixing
- Integrated complete kit of screws
- Contact through REED sensor
- Other cable length on demand

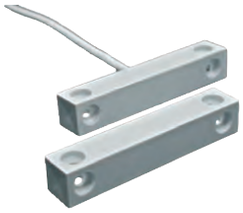

NL100 10 23 A KP

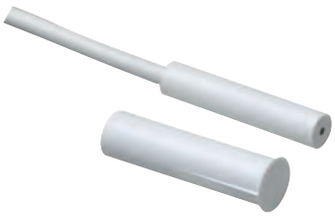

EMK826AT 6M

CHARACTERISTICS

Product number	Dimensions H x W x D	V/A	°C	IP	mm
NL100 10 23 A KP	10 x 55 x 10 mm	100V DC-0,5 A	-20 +70 °C	68	30 mm
NL100 10 22 C KP	10 x 55 x 10 mm	100V DC-0,25 A			23 mm
NL100 10 17 A KP	10 x 55 x 10 mm	100V DC-0,5 A			28 mm
NL100 10 25 C KP	10 x 55 x 10 mm	100V DC-0,25 A			20 mm
EMK826AT 6M	-	100V DC-0,5 A	-10 +60 °C	68	-

NL100 10 23 A KP	Surface rectangular magnetic contact 2 wires 2 m (NO)		0,06 kg
NL100 10 22 C KP	Surface rectangular magnetic contact 3 wires 2 m (changeover)		0,06 kg
NL100 10 17 A KP	Surface rectangular magnetic contact 4 wires 2 m VdS (NO + loop)	VdS	0,06 kg
NL100 10 25 C KP	Surface rectangular magnetic contact 5 wires 2 m VdS (changeover + loop)	VdS	0,08 kg
EMK826AT 6M	Magnetic contact 2 wires (NO) with universal mounting kit surface or mortise		0,14 kg

Customs code 85365011

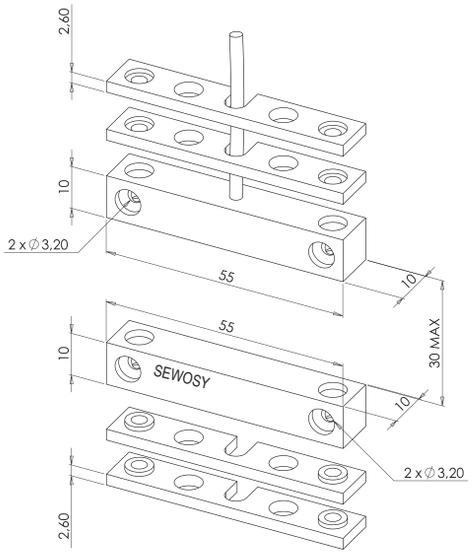

NL100 10 23 A KP

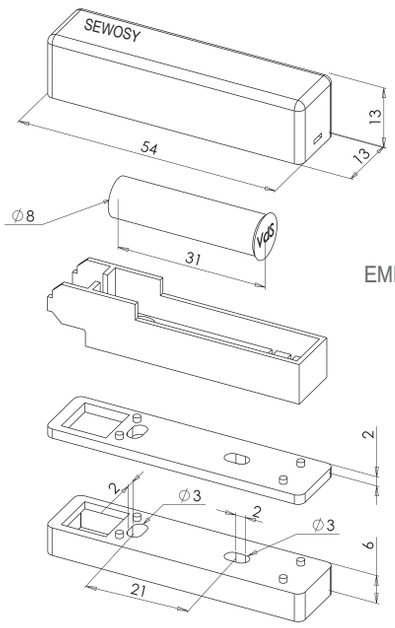

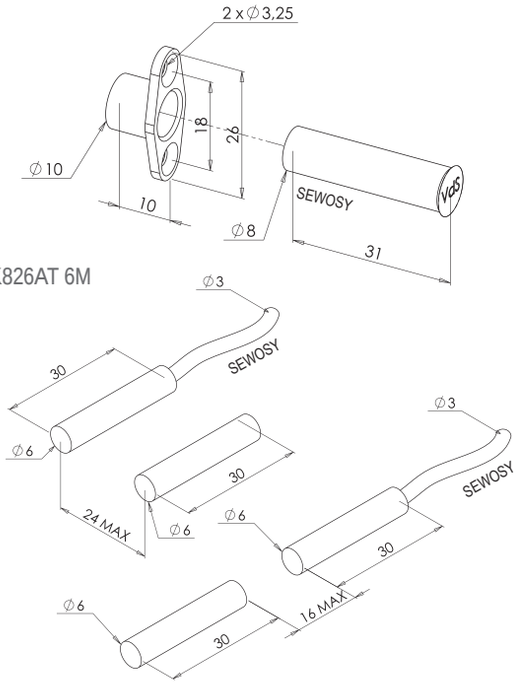

EMK826AT 6M

SURFACE-MOUNT MAGNETIC CONTACTS

rectangular - aluminium body

- Contact through REED sensor
- Other cable length on demand

MS901_CW2

CHARACTERISTICS

Product number	Dimensions H x W x D	V/A	°C	IP	mm
MS901/CW2	15,90 x 42 x 9,60 mm	100V DC-0,25 A	-20 +70 °C	68	25 mm
MS901/ALW2	15,90 x 42 x 9,60 mm	200V DC-0,5 A			
MS901/CLW2	15,90 x 42 x 9,60 mm	100V DC-0,25 A			

MS901/CW2	Surface rectangular aluminium magnetic contact 3 wires 2 m (changeover)	0,08 kg	
MS901/ALW2	Surface rectangular aluminium magnetic contact 4 wires 2 m (NO + loop)	0,09 kg	
MS901/CLW2	Surface rectangular aluminium magnetic contact 5 wires 2 m (changeover + loop)	0,1 kg	Customs code 85365011

MS901/CW2
MS901/ALW2
MS901/CLW2

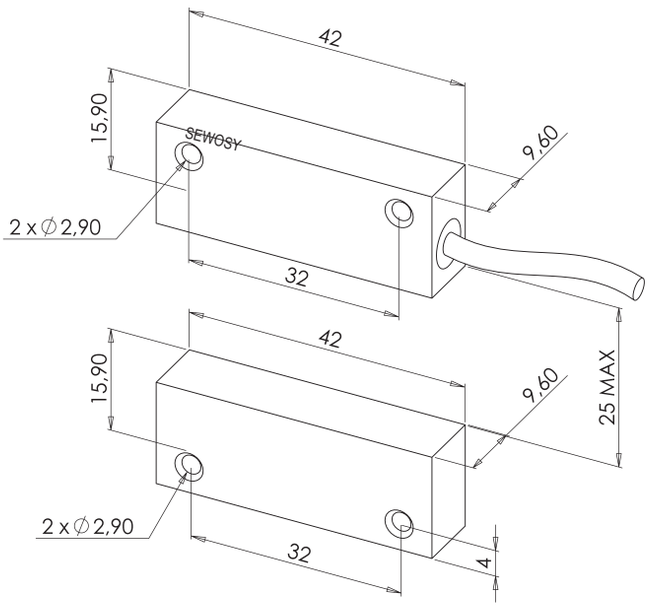

SURFACE-MOUNT MAGNETIC CONTACTS

roller shutter

- Ideal for sectional doors
- Contact through REED sensor
- Other cable length on demand

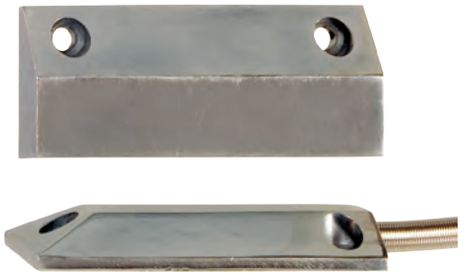

MS911/AW2

CHARACTERISTICS

Product number	Dimensions H x W x D	V/A	°C	IP	mm
MS911/AW2	12 x 87 x 38 mm	200V DC-0,5 A	-20 +70 °C	68	50 mm
MS911/CW2	12 x 87 x 38 mm	100V DC-0,25 A			
MS911/ALW2	12 x 87 x 38 mm	200V DC-0,5 A			
MS911/CLW2	12 x 87 x 38 mm	100V DC-0,25 A			

MS911/AW2	Roller shutter aluminium magnetic contact 2 wires 2 m (NO)	0,3 kg	
MS911/CW2	Roller shutter aluminium magnetic contact 3 wires 2 m (changeover)	0,3 kg	
MS911/ALW2	Roller shutter aluminium magnetic contact 4 wires 2 m (NO + loop)	0,3 kg	
MS911/CLW2	Roller shutter aluminium magnetic contact 5 wires 2 m (changeover + loop)	0,3 kg	Customs code 85365011

MS911/AW2
MS911/CW2
MS911/ALW2
MS911/CLW2

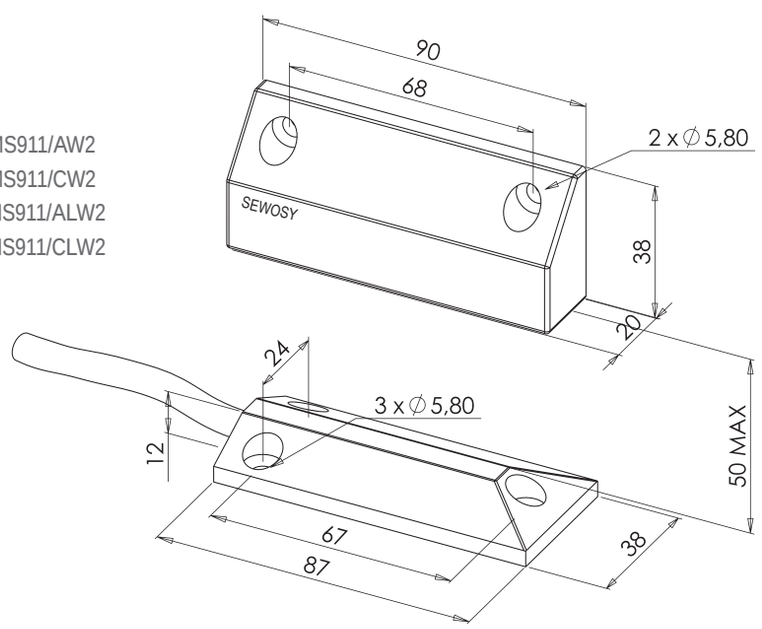

BOLT SWITCH CONTACTS

- Deadbolt information
- Possible extending of lever
- Front or side mounting
- Contact through switch

DBC1330_A

CHARACTERISTICS

Product number	Dimensions H x W x D	V/A	°C	IP
DBC1330/A	26 x 20 x 10,70 mm	100V DC-0,5 A	-25 +70 °C	68
DBC1331/C	26 x 20 x 10,70 mm	30V DC-0,2 A		

DBC1330/A	Bolt switch contact 2 wires (NO) - cut-off power 100V DC / 0,5A 2 m - Vds	VdS	0,05 kg	
DBC1331/C	Bolt switch contact 3 wires (changeover) -cut-off power 30V DC / 0,2A 2 m - Vds	VdS	0,06 kg	Customs code 85365011

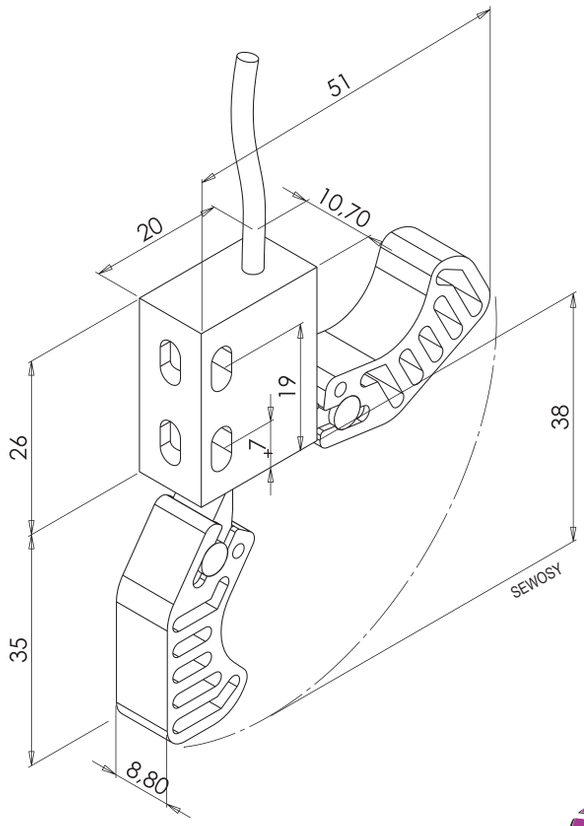

DBC1330/A
DBC1331/C

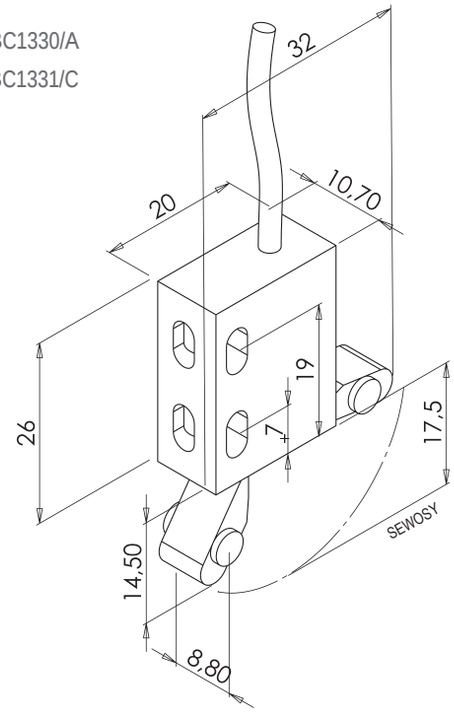

Innovation, spearhead of the company

- Integrated R&D Department
- Powerful design software
- Prototype development

PUSH BUTTONS

CE

STAINLESS STEEL / VANDAL-PROOF PUSH BUTTONS

with crimp-type terminals

PB19NO+NC

PB19NO+NC/B12

CHARACTERISTICS

Product number	Dimensions H x W x D	V/A	V LED	°C	IP
PB19NO+NC	19 x 34 mm	250V AC-2 A 24V DC-1 A	-	-25 +55 °C	65
PB19NO+NC/B12	19 x 34 mm	250V AC-2 A 24V DC-1 A	12V DC	-25 +55 °C	65

PB19NO+NC	Push button stainless steel (NO+NC) crimp-type terminals	0,02 kg	
PB19NO+NC/B12	Push button stainless steel (NO+NC) 12 V DC crimp-type terminals - blue	0,02 kg	Customs code 85365080

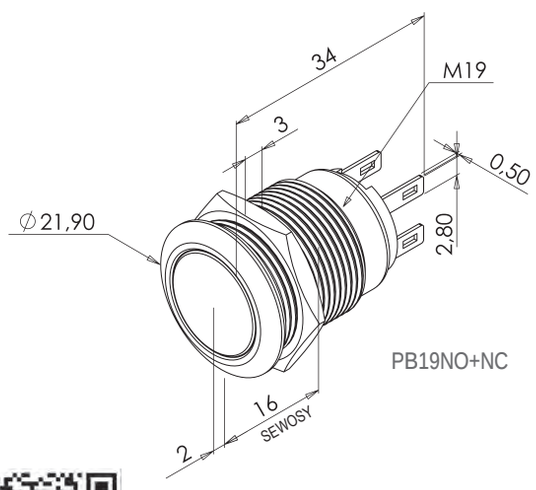

PB19NO+NC

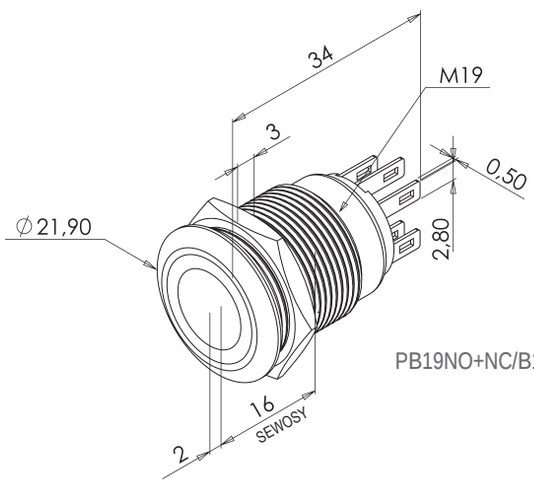

PB19NO+NC/B12

STAINLESS STEEL / VANDAL-PROOF PUSH BUTTONS

with crimp-type terminals and mortise-mount plate PBP19_3

PB19NO+NC_SI

PB19NO+NC_B12_SI

PB19NO+NC_G12_SI

PB19NO+NC_R12_SI

CHARACTERISTICS

Product number	Dimensions H x W x D	V/A	V LED	°C	IP
PB19NO+NC_SI	90 x 35 x 34 mm	250V AC-2 A 24V DC-1 A	-	-25 +55 °C	65
PB19NO+NC_B12_SI	90 x 35 x 34 mm	250V AC-2 A 24V DC-1 A	12V DC	-25 +55 °C	65
PB19NO+NC_G12_SI	90 x 35 x 34 mm	250V AC-2 A 24V DC-1 A	12V DC		
PB19NO+NC_R12_SI	90 x 35 x 34 mm	250V AC-2 A 24V DC-1 A	12V DC		

PB19NO+NC_SI	Push button stainless steel (NO+NC) + PBP19_3 crimp-type terminals	0,06 kg	
PB19NO+NC_B12_SI	Push button stainless steel (NO+NC) 12V DC + PBP19_3 crimp-type terminals - blue	0,06 kg	
PB19NO+NC_G12_SI	Push button stainless steel (NO+NC) 12V DC + PBP19_3 crimp-type terminals - green	0,06 kg	
PB19NO+NC_R12_SI	Push button stainless steel (NO+NC) 12 AC/DC + PBP19_3 crimp-type terminals - red	0,06 kg	Customs code 85365080

PB19NO+NC_SI

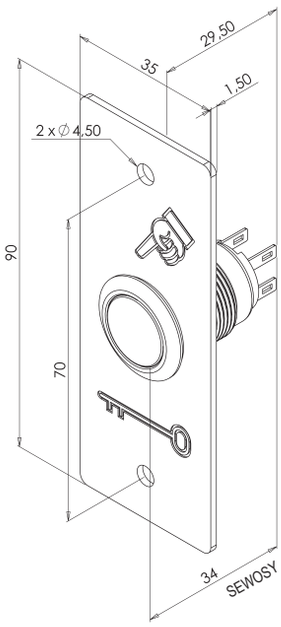

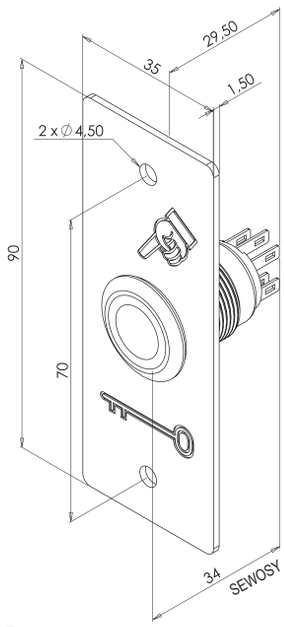

PB19NO+NC_B12_SI
PB19NO+NC_G12_SI
PB19NO+NC_R12_SI

STAINLESS STEEL / VANDAL-PROOF PUSH BUTTONS

with soldered wires (15 cm) and shrink tube

PB19NO+NC_4FS

PB19NO+NC_B12_6FS

PB19NO+NC_G12_6FS

CHARACTERISTICS

Product number	Dimensions H x W x D	V/A	V LED	°C	IP
PB19NO+NC_4FS	19 x 40 mm	250V AC-2 A 24V DC-1 A	-	-25 +55 °C	65
PB19NO+NC_B12_6FS	19 x 40 mm	250V AC-2 A 24V DC-1 A	12V DC	-25 +55 °C	65
PB19NO+NC_G12_6FS	19 x 40 mm	250V AC-2 A 24V DC-1 A	12V DC	-25 +55 °C	65

PB19NO+NC_4FS	Push button stainless steel (NO+NC) - 4 wires 15 cm	0,05 kg	
PB19NO+NC_B12_6FS	Push button stainless steel (NO+NC) - 6 wires 15 cm blue	0,05 kg	
PB19NO+NC_G12_6FS	Push button stainless steel (NO+NC) - 6 wires 15 cm green	0,05 kg	Customs code 85365080

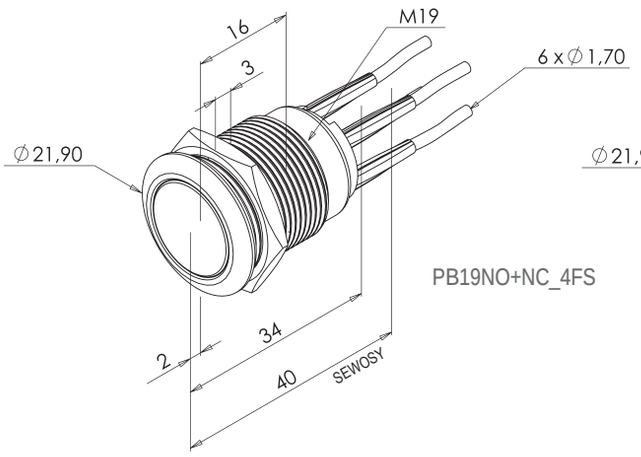

PB19NO+NC_4FS

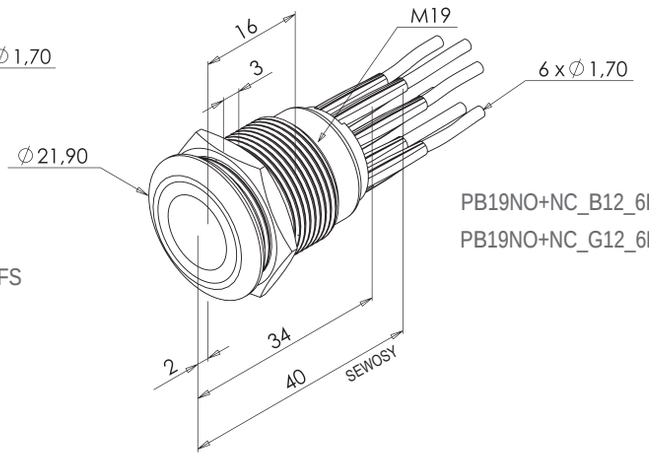

PB19NO+NC_B12_6FS
PB19NO+NC_G12_6FS

STAINLESS STEEL / VANDAL-PROOF PUSH BUTTONS

with soldered wires and mortise-mount plate PBP19_3

PB19NO+NC_4FS_SI

PB19NO+NC_B12_6FSI

PB19NO+NC_G12_6FSI

PB19NO+NC_R12_6FSI

CHARACTERISTICS

Product number	Dimensions H x W x D	V/A	V LED	°C	IP
PB19NO+NC_4FS_SI	90 x 35 x 40 mm	250V AC-2 A 24V DC-1 A	–	-25 +55 °C	65
PB19NO+NC_B12_6FSI	90 x 35 x 40 mm	250V AC-2 A 24V DC-1 A	12V DC	-25 +55 °C	65
PB19NO+NC_G12_6FSI	90 x 35 x 40 mm	250V AC-2 A 24V DC-1 A	12V DC		
PB19NO+NC_R12_6FSI	90 x 35 x 40 mm	250V AC-2 A 24V DC-1 A	12V DC		

PB19NO+NC_4FS_SI	Push button stainless steel (NO+NC) 12 AC/DC - 4 wires 15 cm + PBP19_3	0,08 kg	
PB19NO+NC_B12_6FSI	Push button stainless steel (NO+NC) 12 AC/DC - 6 wires 15 cm + PBP19_3 blue	0,08 kg	
PB19NO+NC_G12_6FSI	Push button stainless steel (NO+NC) 12 AC/DC - 6 wires 15 cm + PBP19_3 green	0,08 kg	
PB19NO+NC_R12_6FSI	Push button stainless steel (NO+NC) 12 AC/DC - 6 wires 15 cm + PBP19_3 red	0,08 kg	Customs code 85365080

PB19NO+NC_4FS_SI

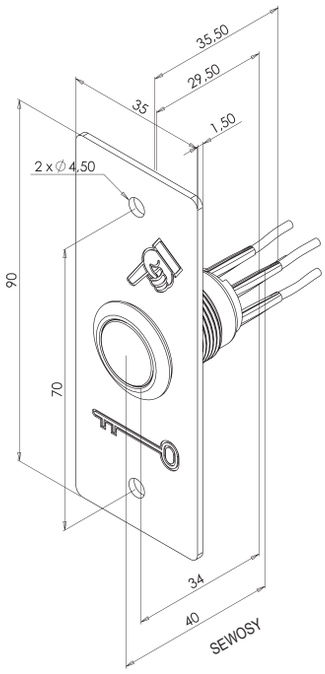

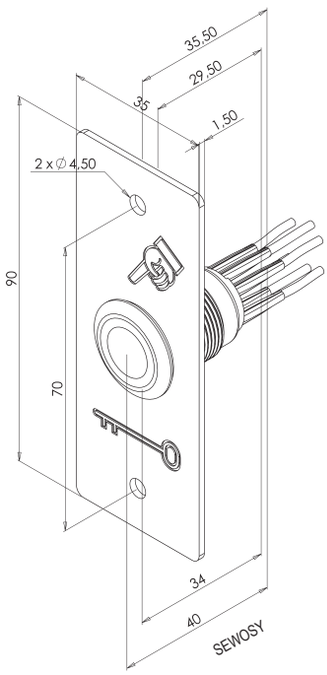

PB19NO+NC_B12_6FSI
PB19NO+NC_G12_6FSI
PB19NO+NC_R12_6FSI

STAINLESS STEEL / VANDAL-PROOF PUSH BUTTONS

with screw terminals

PB19NO

PB19NO+NC_ST

PB19NO+NC_B12_ST

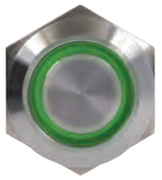

PB19NO+NC_G12_ST

PB19NO+NC_R12_ST

CHARACTERISTICS

Product number	Dimensions H x W x D	V/A	V LED	°C	IP
PB19NO	19 x 27,80 mm	48V DC-2A	–	-25 +55 °C	65
PB19NO+NC_ST	19 x 35,20 mm	250V AC-2 A 24V DC-1 A	–		
PB19NO+NC_B12_ST	19 x 35,20 mm	250V AC-2 A 24V DC-1 A	12V DC		
PB19NO+NC_G12_ST	19 x 35,20 mm	250V AC-2 A 24V DC-1 A	12V DC		
PB19NO+NC_R12_ST	19 x 35,20 mm	250V AC-2 A 24V DC-1 A	12V DC		

PB19NO	Push button stainless steel (NO) screw terminals	0,02 kg	
PB19NO+NC_ST	Push button stainless steel (NO+NC) screw terminals	0,02 kg	
PB19NO+NC_B12_ST	Push button stainless steel (NO+NC) 12 V DC screw terminals - blue	0,02 kg	
PB19NO+NC_G12_ST	Push button stainless steel (NO+NC) 12 V DC screw terminals - green	0,03 kg	
PB19NO+NC_R12_ST	Push button stainless steel (NO+NC) 12 V DC screw terminals - red	0,02 kg	Customs code 85365080

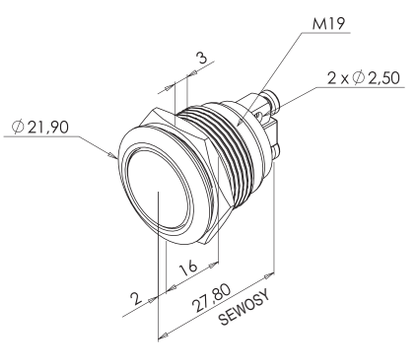

PB19NO

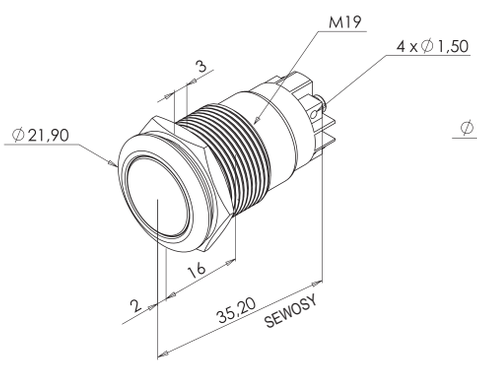

PB19NO+NC_ST

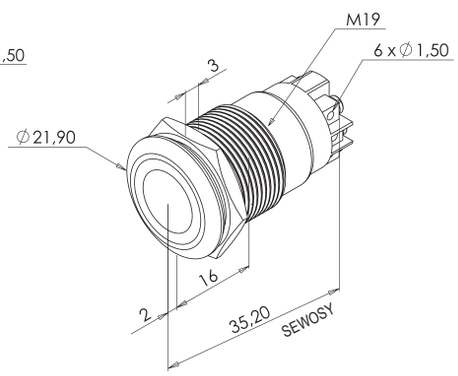

PB19NO+NC_B12_ST
PB19NO+NC_G12_ST
PB19NO+NC_R12_ST

STAINLESS STEEL / VANDAL-PROOF PUSH BUTTONS

with screw terminals and mortise-mount plate PBP19_3

PB19NO_SI

PB19NO+NC_ST_SI

PB19NO+NC_B12ST_SI

PB19NO+NC_G12ST_SI

PB19NO+NC_R12ST_SI

CHARACTERISTICS

Product number	Dimensions H x W x D	V/A	V LED	°C	IP
PB19NO_SI	90 x 35 x 27,80 mm	48V DC-2A	_	-25 +55 °C	65
PB19NO+NC_ST_SI	90 x 35 x 35,85 mm	250V AC-2 A 24V DC-1 A	_		
PB19NO+NC_B12ST_SI	90 x 35 x 35,85 mm	250V AC-2 A 24V DC-1 A	12V DC		
PB19NO+NC_G12ST_SI	90 x 35 x 35,85 mm	250V AC-2 A 24V DC-1 A	12V DC		
PB19NO+NC_R12ST_SI	90 x 35 x 35,85 mm	250V AC-2 A 24V DC-1 A	12V DC		

PB19NO_SI	Push button stainless steel (NO) + stainless steel plate PBP19_3 screw terminals	0,06 kg	
PB19NO+NC_ST_SI	Push button stainless steel (NO+NC) + stainless steel plate PBP19_3 screws terminals	0,06 kg	
PB19NO+NC_B12ST_SI	Push button stainless steel (NO+NC) 12V DC + PBP19_3 screw terminals - blue	0,06 kg	
PB19NO+NC_G12ST_SI	Push button stainless steel (NO+NC) 12V DC + PBP19_3 screw terminals - green	0,06 kg	
PB19NO+NC_R12ST_SI	Push button stainless steel (NO+NC) 12V DC + PBP19_3 screw terminals - red	0,06 kg	Customs code 85365080

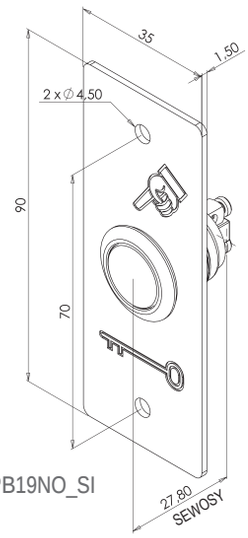

PB19NO_SI

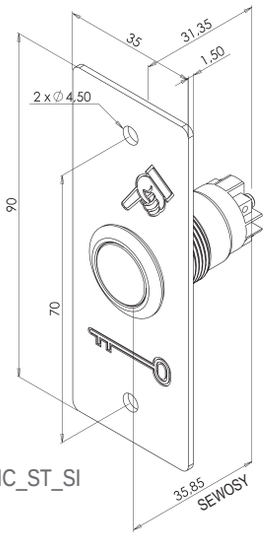

PB19NO+NC_ST_SI

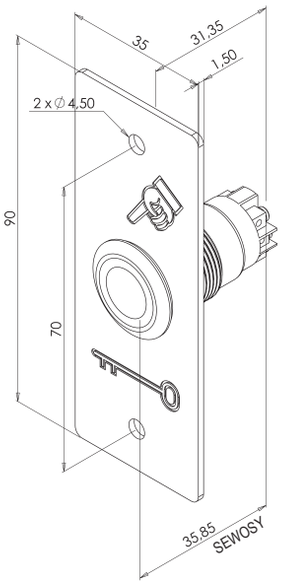

PB19NO+NC_B12ST_SI
PB19NO+NC_G12ST_SI
PB19NO+NC_R12ST_SI

STAINLESS STEEL / VANDAL-PROOF PUSH BUTTONS

stainless steel mortise-mount plates

PBP19/FL

PBP19_3

PBP19_4

PBP19_B

PBP19_TL

CHARACTERISTICS

Product number	Dimensions H x W x D	
PBP19/FL	90 x 35 x 1,50 mm	-10 +60 °C
PBP19_3	90 x 35 x 1,50 mm	
PBP19_4	90 x 35 x 1,50 mm	
PBP19_B	80 x 80 x 1,50 mm	
PBP19_TL	80 x 80 x 1,50 mm	

PBP19/FL	Stainless steel plate for PB19 neutral	0,04 kg	
PBP19_3	Stainless steel plate for PB19 with laser labelling finger + key	0,04 kg	
PBP19_4	Stainless steel plate for PB19 with laser labelling finger + key + braille «PORTE»	0,04 kg	
PBP19_B	Stainless steel with braille marking plate for PB19	0,04 kg	
PBP19_TL	Stainless steel plate for head reader	0,06 kg	Customs code 85365080

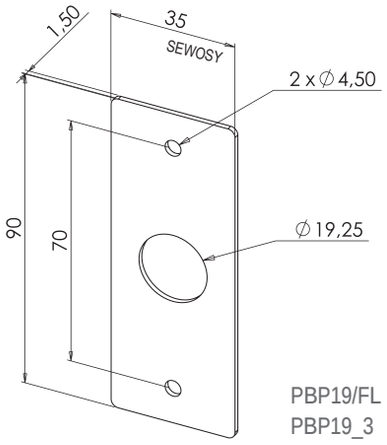

PBP19/FL
PBP19_3
PBP19_4

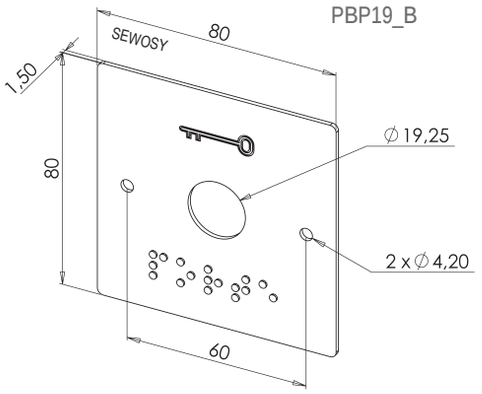

PBP19_B

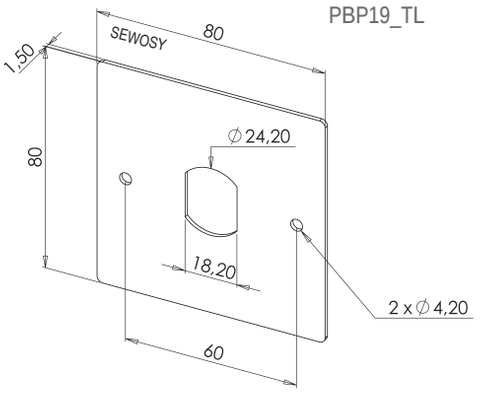

PBP19_TL

STAINLESS STEEL / VANDAL-PROOF PUSH BUTTONS

stainless steel surface-mount housings

PBHI1

PBHI2

CHARACTERISTICS

Product number	Dimensions H x W x D	°C
PBHI1	94 x 38,30 x 46,80 mm	-10 +60 °C
PBHI2	83,30 x 83,50 x 46,80 mm	

PBHI1	Surface mounting housing stainless steel for push button on narrow plate	0,2 kg	
PBHI2	Surface mounting housing for push button on square plate	0,38 kg	Customs code 85365080

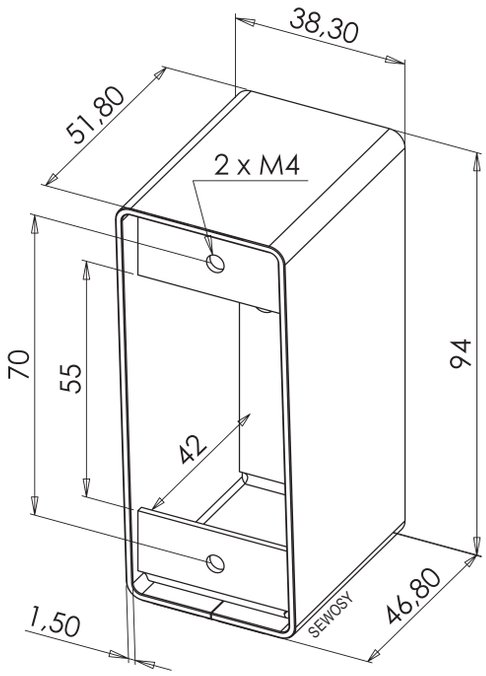

PBHI1

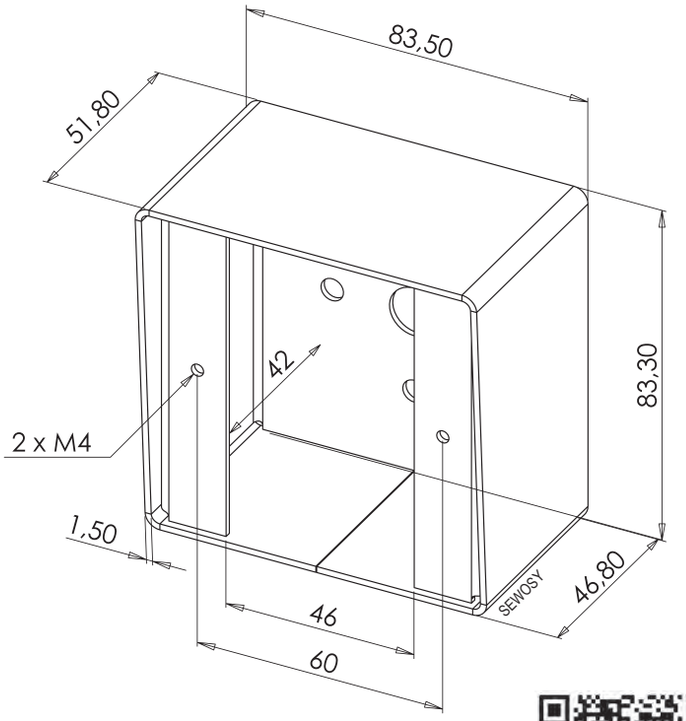

PBHI2

PUSH BUTTONS

for disabled persons - ABS body

PB1010

PBMR

CHARACTERISTICS

Product number	Dimensions H x W x D	V/A	°C	IP
PB1010	61 x 61 x 22 mm	250V AC-10 A 24V DC-1 A	-5 +55 °C	20
PBMR	94,5 x 94,5 x 47,2 mm	30V DC-7 A	-10 +60 °C	20

PB1010	Push button abs NO+NC with «key» symbol screw terminals	0,06 kg	
PBMR	Push button for disabled people NO + NC contact	0,22 kg	Customs code 85365080

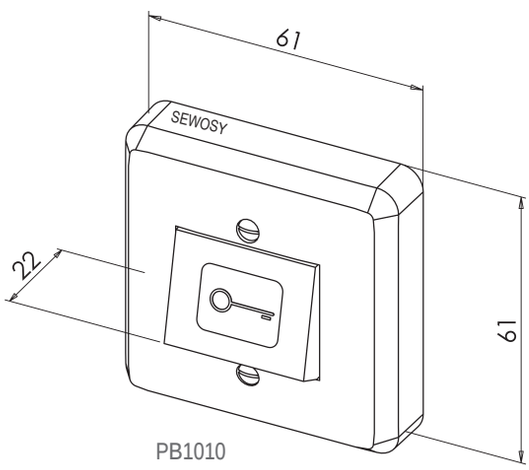

PB1010

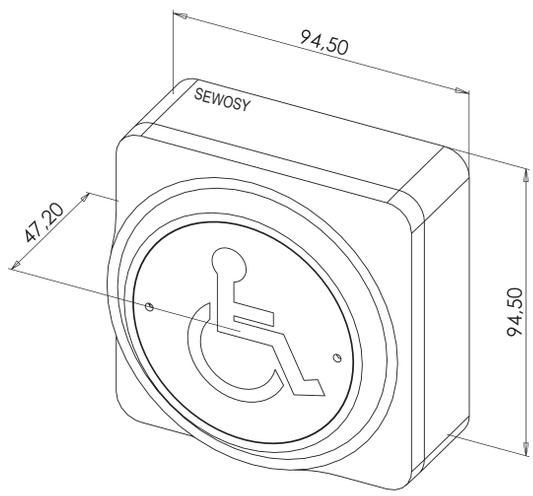

PBMR

PUSH BUTTONS

contactless microwave button

PBWS410-2

PBWS410-2SBOX

CHARACTERISTICS

Product number	Dimensions H x W x D	V AC/DC	ImA AC/DC	V/A	T s	IP	mm
PBWS410-2	86 x 86 x 29 mm	12-24V AC/DC	70 mA	24V DC - 120V AC / 0,5A	0,5 - 10 s	20	50-500 mm
PBWS410-2SBOX	85 x 85 x 35 mm						
PBWS410-2MBOX	85 x 85 x 35 mm						

PBWS410-2	Push button microwave contactless 12-24V AC/DC	0,12 kg	
PBWS410-2SBOX	Surface mounting housing 85 x 85 x 35 mm for PBWS410-2	0,05 kg	
PBWS410-2MBOX	Mortise mounting housing 85 x 85 x 35 mm for PBWS410-2	0,05 kg	Customs code 85365080

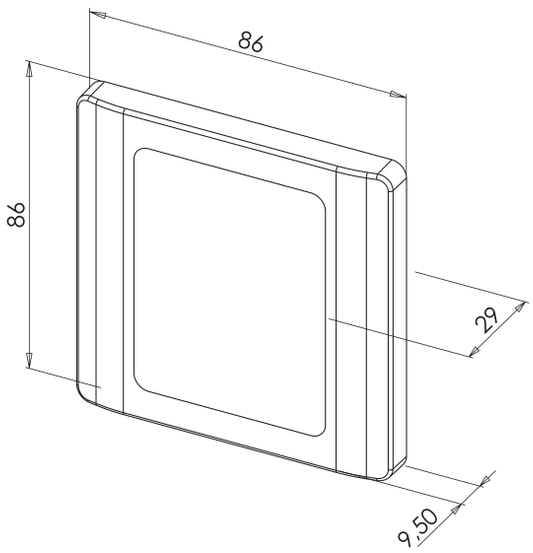

PBWS410-2

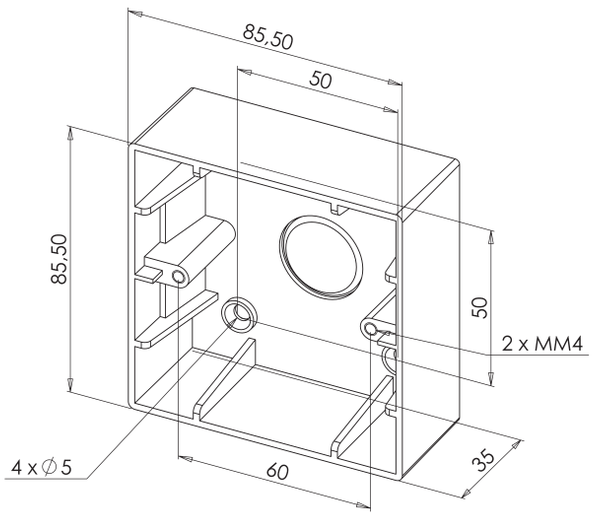

PBWS410-2SBOX

PUSH BUTTONS

for disabled persons - with Braille marking on plate

- Integrated buzzer and bicolor LED
- Adjustable time delay
- 1 changeover contact per relay and dry contact NC
- Mounting on electric pot (diameter 60)

PB19_BBL2

PB19_BBL2-B12

PBHI2

CHARACTERISTICS

Product number	Dimensions H x W x D	V AC/DC	ImA AC/DC	V/A	T s	°C	IP
PB19_BBL2	80 x 80 x 34 mm	12-24V AC/DC	60 mA max.	30V DC-2 A 125V AC-1 A	0 - 15 s	-5 +40 °C	20
PB19_BBL2-B12	80 x 80 x 34 mm						
PBHI2	83,30 x 83,50 x 46,80 mm					-10 +60 °C	

PB19_BBL2	Push button with mortise mounting plate, Braille marking «PORTE» + buzzer , Led and timer	0,14 kg	
PB19_BBL2-B12	Push button with mortise mounting plate, Braille marking «PORTE» + buzzer , Led and timer	0,14 kg	
PBHI2	Surface mounting housing for push button on square plate	0,38 kg	Customs code 85365080

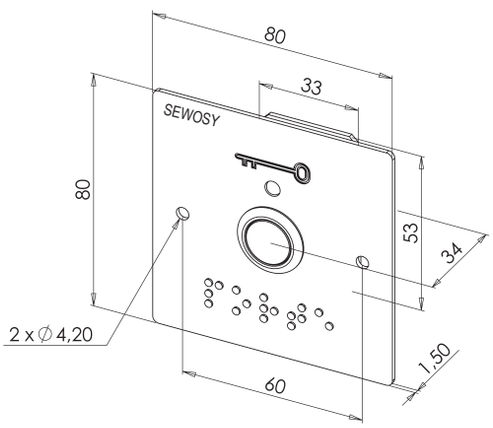

PB19_BBL2

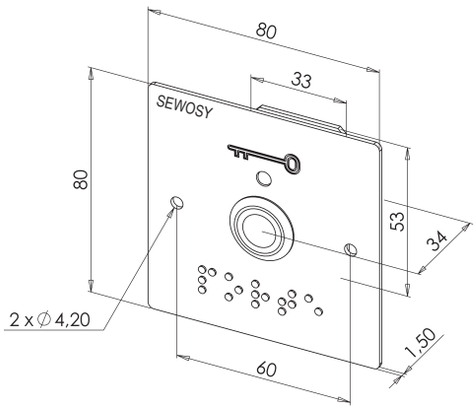

PB19_BBL2-B12

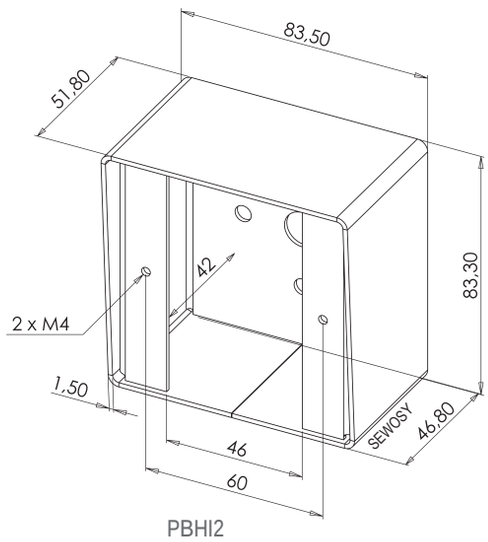

PBHI2

PUSH BUTTONS

for disabled persons - with Braille marking on plate for narrow profiles

- Suitable for narrow profiles
- Integrated buzzer and bicolor LED
- Adjustable time delay
- 1 changeover contact per relay and dry contact NC
- Mortised or surface-mounting (with optional housing)

PB19_BBL2E

PB19_BBL2E-B12

PBHI1

CHARACTERISTICS

Product number	Dimensions H x W x D	V AC/DC	ImA AC/DC	V/A	T s	°C	IP
PB19_BBL2E	90 x 35 x 34 mm	12-24V AC/DC	60 mA max.	30V DC-2 A 125V AC-1 A	0 - 15 s	-5 +40 °C	20
PB19_BBL2E-B12	90 x 35 x 34 mm						
PBHI1	94 x 38,30 x 46,80 mm					-10 +60 °C	

PB19_BBL2E	Push button with mortise mounting plate, Braille marking «PORTE» + buzzer , Led and timer	0,14 kg	
PB19_BBL2E-B12	Push button with mortise mounting plate, Braille marking «PORTE» + buzzer , Led and timer	0,14 kg	
PBHI1	Surface mounting housing stainless steel for push button on narrow plate	0,2 kg	Customs code 85365080

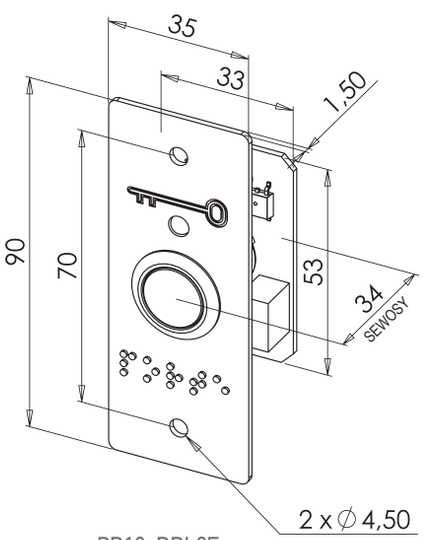

PB19_BBL2E

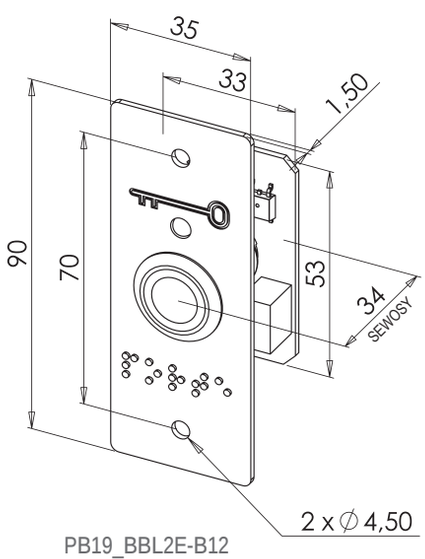

PB19_BBL2E-B12

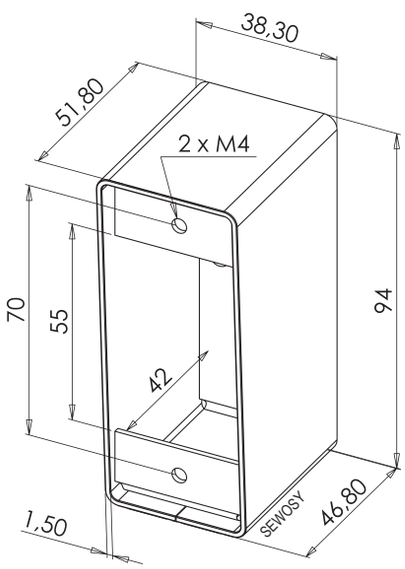

PBHI1

KEY SWITCHES

Key switches of the CAC series are designed to meet all needs of access unlocking. Aesthetical with their stainless steel grey front plate, they also benefit from reduced dimensions, ideal for a perfect integration in all supports.

The universal version (CAC2U) features two changeover contacts. Depending on your wishes, the key switch will work in pulse or sustained mode! That is to say that this all-in-one product was created to satisfy the most demanding of you.

KEY SWITCHES

CE

KEY SWITCHES

mortise-mount

- Stainless steel front
- Compatible with 1/2 European cylinder 30/10
- 40 cm of wires
- Patented

CAC1ME

CHARACTERISTICS

Dimensions H x W x D	120 x 80 x 47,5 mm		
V/A	230V AC-10A	°C	-10 +40° C
IP	40		

CAC1ME	Narrow sustained key switch 1 ctc NO/NC	N.C kg	
CAC2ME	Narrow sustained key switch 2 ctc NO/NC	N.C kg	Customs code 85362010

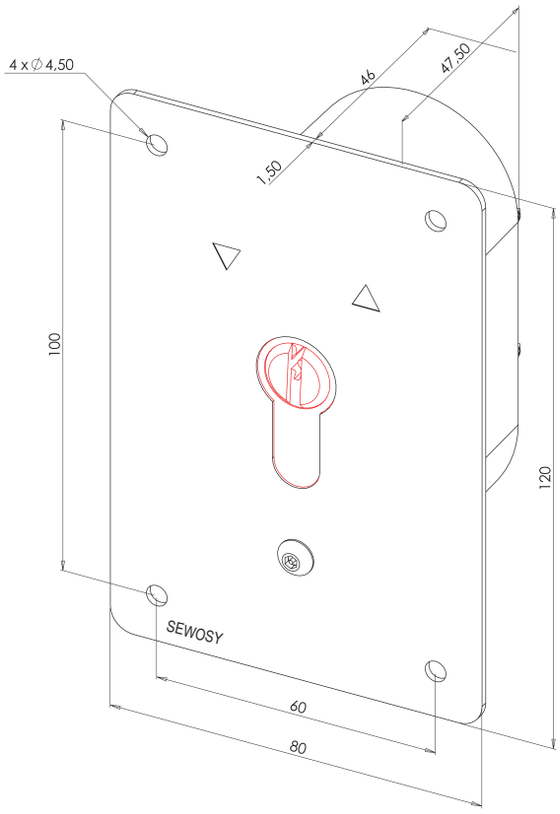

CAC1ME
CAC2ME

KEY SWITCHES

surface-mount

- Stainless steel front
- Optional self protection
- Compatible with 1/2 European cylinder 30/10
- 40 cm of wires
- Patented

CAC1M

CHARACTERISTICS

Dimensions H x W x D	94,5 x 49,5 x 47 mm		
V/A	230V AC-10A	°C	-10 +40° C
IP	40		

CAC1M	Narrow sustained key switch 1 ctc NO/NC	N.C kg	
CAC1MAP	Narrow sustained key switch 1 ctc NO/NC + tamper switch	N.C kg	
CAC2M	Narrow sustained key switch 2 ctc NO/NC	N.C kg	
CAC2MAP	Narrow sustained key switch 2 ctc NO/NC + tamper switch	N.C kg	Customs code 85362010

CAC1M
CAC1MAP
CAC2M
CAC2MAP

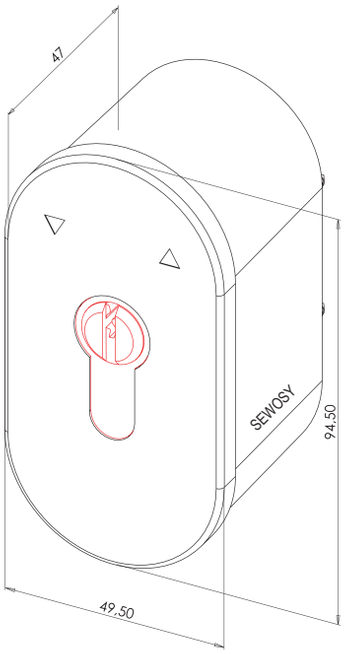

KEY SWITCHES

universal

- Mortised or surface-mounting
- 1 or 2 contact(s) impulse or maintained
- Optional self protection
- Compatible with 1/2 European cylinder 30/10
- 40 cm of wires
- Patented

CAC1U

CAC1UAP

CHARACTERISTICS

Dimensions H x W x D	94,5 x 49,5 x 47 mm		
V/A	230V AC-10A	°C	-10 +40° C
IP	40		

CAC2U

CAC2UAP

CAC1U	Narrow universal key switch 1 ctc NO/NC sustained / momentary	N.C kg	
CAC1UAP	Narrow universal key switch 1 ctc NO/NC + tamper switch sustained / momentary	N.C kg	
CAC2U	Narrow universal key switch 2 ctc NO/NC sustained / momentary	N.C kg	
CAC2UAP	Narrow universal key switch 2 ctc NO/NC + tamper switch sustained / momentary	N.C kg	Customs code 85362010

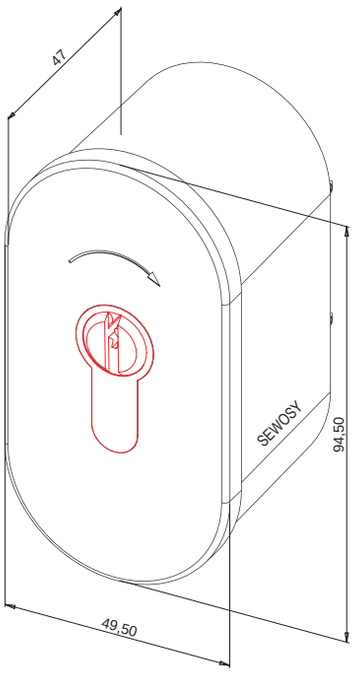

CAC1U
CAC1UAP
CAC2U
CAC2UAP

Durability, major challenge for access security

- Prototyping in-house developed and tested
- Rigorous manufacturing process
- High-performance measuring tools

FIRE SECURITY

FIRE SECURITY

GREEN MANUAL CALL POINTS 290

FOR EMERGENCY EXITS 290

GREEN MANUAL CALL POINTS BUZZER + LED 291

FOR EMERGENCY EXITS 291

RED MANUAL CALL POINTS.....292

FIRE ALARM..... 292

WHITE MANUAL CALL POINTS.....293

A/C SHUTDOWN 293

ACCESSORIES FOR MANUAL CALL POINTS 294

VELMAG™ ELECTROMAGNETIC LOCKS.....295

SURFACE-MOUNT DOOR HOLDER DEVICES 296
MORTISE-MOUNT DOOR HOLDER DEVICES 300
UNIVERSAL MOUNTING ACCESSORIES 302
FLOOR-MOUNTING ACCESSORIES 303

GREEN MANUAL CALL POINTS

for emergency exits

DM RANGE
100 %
FRENCH MADE

- Can be semi-flush on 60 mm mounting box
- Suitable for Swiss and German flush boxes
- 2 reset keys included

DMV1

CHARACTERISTICS

Dimensions H x W x D	85 x 85 x 55,2 mm		
V/A	250V AC / 5 A - 30V DC / 4 A	°C	0 +50 °C
IP	40		

DMV1	Manual call point green 1 contact	0,2 kg	
DMV2	Manual call point green 2 contacts	0,2 kg	
DMV1C	Manual call point green 1 contact + Protection cover	0,21 kg	
DMV2C	Manual call point green 2 contacts + Protection cover	0,21 kg	
DMC	Protection cover for manual call point	N.C kg	Customs code 85318095

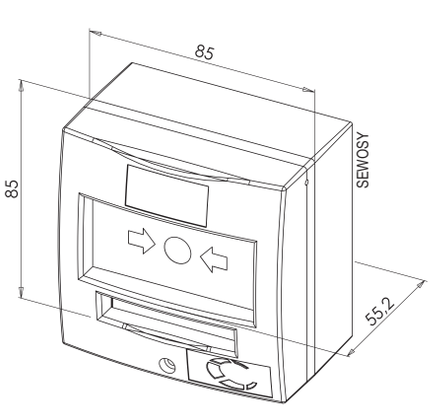

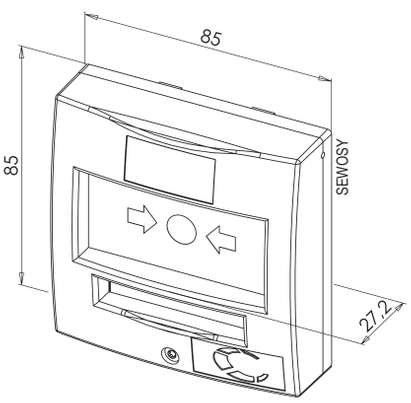

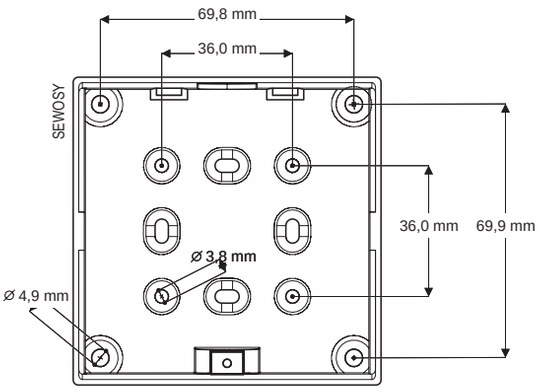

GREEN MANUAL CALL POINTS BUZZER + LED

for emergency exits

DM RANGE
100 %
FRENCH MADE

- Can be semi-flush on 60 mm mounting box
- Suitable for Swiss and German flush boxes
- 2 reset keys included

DMV1CBL

CHARACTERISTICS

Dimensions H x W x D	85 x 85 x 55,2 mm		
V/A	250V AC / 5 A - 30V DC / 4 A	°C	0 +50 °C
V DC	12-24-48 V DC	ImA DC	max. 50 mA
IP	40		

DMV1BL	Manual call point green 1 contact + buzzer + led	0,2 kg
DMV1CBL	Manual call point green 1 contact + Protection cover + Buzzer + Led	0,21 kg
DMC	Protection cover for manual call point	N.C kg

Customs code
85318095

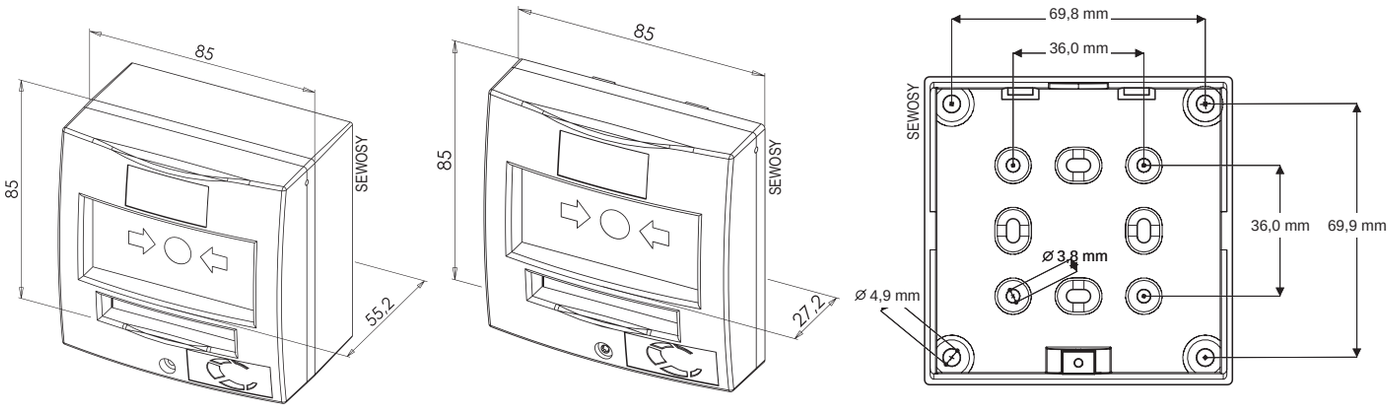

RED MANUAL CALL POINTS

fire alarm

DM RANGE
100 %
FRENCH MADE

- EN 54-11
- Can be semi-flush on 60 mm mounting box
- Suitable for Swiss and German flush boxes
- 2 reset keys included

DMR1C

CHARACTERISTICS

Dimensions H x W x D	85 x 85 x 55,2 mm		
V/A	250V AC / 5 A - 30V DC / 4 A	°C	0 +50 °C
IP	40		

EN 54-11
certification
Query made

DMR1	Manual call point red 1 contact	0,2 kg
DMR2	Manual call point red 2 contacts	0,2 kg
DMR1C	Manual call point red 1 contact + Protection cover	0,21 kg
DMR2C	Manual call point red 2 contacts + Protection cover	0,21 kg
DMC	Protection cover for manual call point	N.C kg

Customs code
85318095

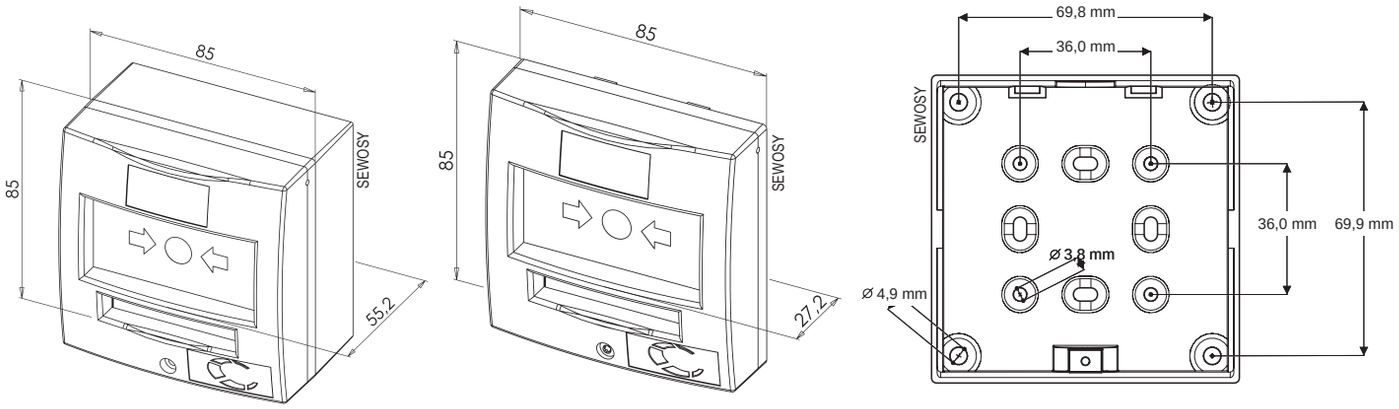

WHITE MANUAL CALL POINTS

A/C shutdown

DM RANGE
100 %
FRENCH MADE

- Can be semi-flush on 60 mm mounting box
- Suitable for Swiss and German flush boxes
- 2 reset keys included

DMW1C

CHARACTERISTICS

Dimensions H x W x D	85 x 85 x 55,2 mm		
V/A	250V AC / 5 A - 30V DC / 4 A	°C	0 +50 °C
IP	40		

DMW1	Manual call point white 1 contact	0,2 kg
DMW2	Manual call point white 2 contacts	0,2 kg
DMW1C	Manual call point white 1 contact + Protection cover	0,21 kg
DMW2C	Manual call point white 2 contacts + Protection cover	0,21 kg
DMC	Protection cover for manual call point	N.C kg

Customs code
85318095

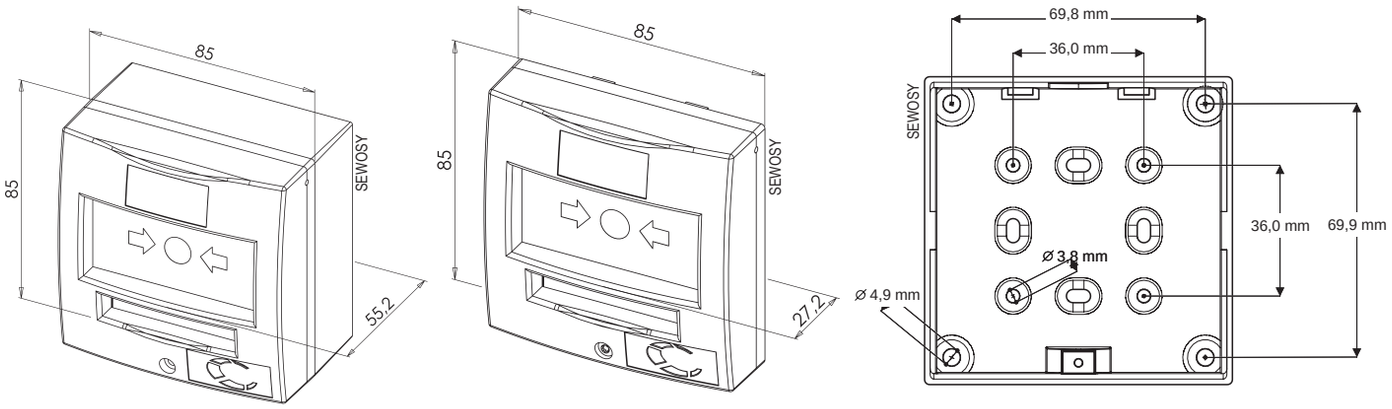

MANUAL CALL POINTS

accessories

DMC

DMK

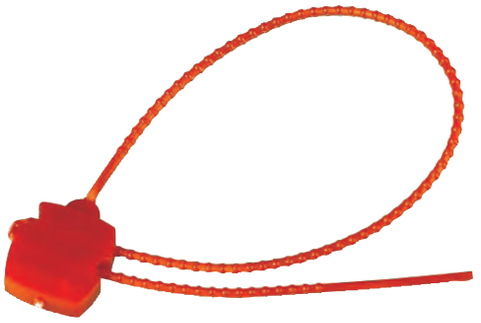

2212PLTIPR

DMC	Protection cover for manual call point	N.C kg	
DMK	Reset key for manual call point	N.C kg	
2212PLTIPR	Seal kit for manual call point	0,04 kg	Customs code 85318095

DM RANGE
100 %
FRENCH MADE

SEWOSY

VELMAG™ ELECTROMAGNETIC LOCKS

"DOOR HOLDER DEVICES"

20 DaN *

40 DaN

50 DaN

SIGNIFICANT ENERGY SAVINGS

CE

* Indicative holding forces (minimum 90% guaranteed) for an implementation meeting the optimum laying conditions

VELMAG™ ELECTROMAGNETIC LOCKS

surface-mount door holder devices

CE EN 1155
certificate n° 1239/CPR/0805501

- Low consumption
- Connection through screw terminal block
- Integrated protection diodes
- Armature plate to mount in a fixed or articulated position
- REED contact for open / closed door position (BCC models)

BC series

CHARACTERISTICS

Dimensions H x W x D	Magnet Armature plate		85 x 85 x 41,5 56 x 56 x 55	
V DC	24V DC		IP	30
ImA DC	BC242 BC244 BC245 BCC244 BCC245	16 mA 60 mA 60 mA 60 mA 60 mA	DaN	20* 40* 50* 40* 50*
V/A	BCC244 BCC245	175V DC-0,5 A		

* Indicative holding forces (minimum 90% guaranteed), for an implementation meeting the optimum laying conditions
CAUTION: for interior use (IP30)

BC242	Electromagnetic door holder surface square box 24 VDC-20 DaN - EN1155 n°0805501	0,78 kg
BC244	Electromagnetic door holder surface square box 24 VDC-40 DaN - EN1155 n°0805501	0,8 kg
BC245	Electromagnetic door holder surface square box 24 VDC-50 DaN - EN1155 n°0805501	0,8 kg
BCC244	Electromagnetic door holder surface square box - with contact 24 VDC-40 DaN - EN1155 n°0805501	0,8 kg
BCC245	Electromagnetic door holder surface square box - with contact 24 VDC-50 DaN - EN1155 n°0805501	0,8 kg

Customs code
83014019

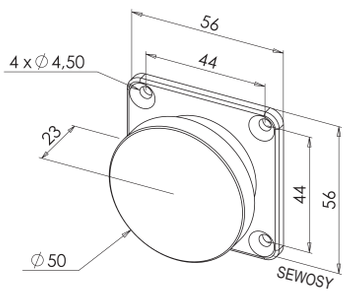

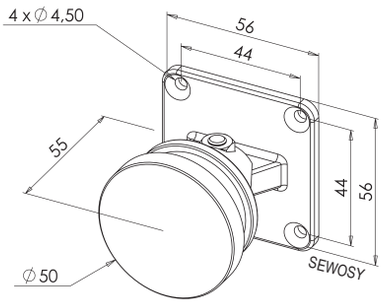

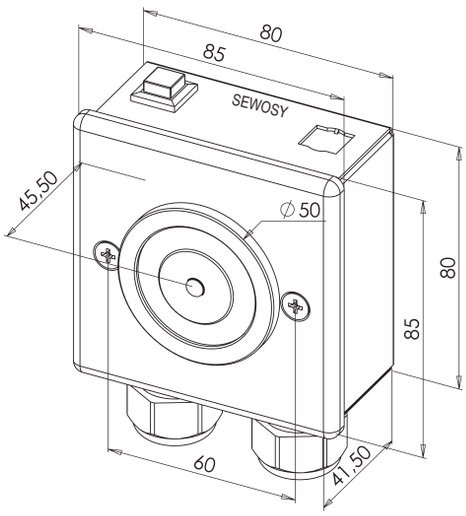

VELMAG™ ELECTROMAGNETIC LOCKS

surface-mount door holder devices

CE EN 1155
certificate n° 1239/CPR/0805501

- Low consumption
- Connection through screw terminal block
- Integrated protection diodes
- Armature plate to mount in a fixed or articulated position
- REED contact for open / closed door position (BCC models)

BC series

CHARACTERISTICS

Dimensions H x W x D	Magnet Armature plate		85 x 85 x 41,5 56 x 56 x 55	
V DC	48V DC		IP	30
ImA DC	BC482 BC484 BCC484	13 mA 32 mA 32 mA	DaN	20* 40* 40*
V/A	BCC484		175V DC-0,5 A	

* Indicative holding forces (minimum 90% guaranteed), for an implementation meeting the optimum laying conditions
CAUTION: for interior use (IP30)

BC482	Electromagnetic door holder surface square box 48 VDC-20 DaN - EN1155 n°0805501	0,8 kg	
BC484	Electromagnetic door holder surface square box 48 VDC-40 DaN - EN1155 n°0805501	0,8 kg	
BCC484	Electromagnetic door holder surface square box - with contact 48 VDC-40 DaN - EN1155 n°0805501	0,8 kg	Customs code 83014019

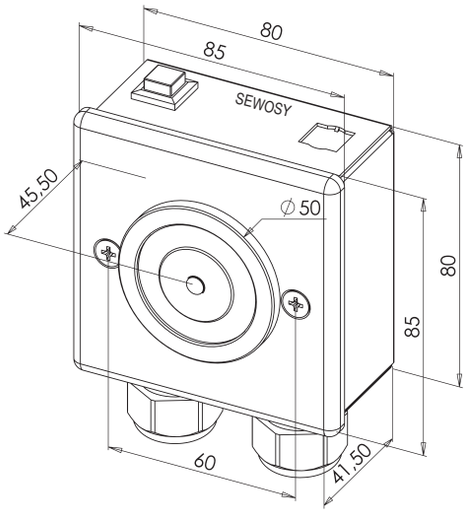

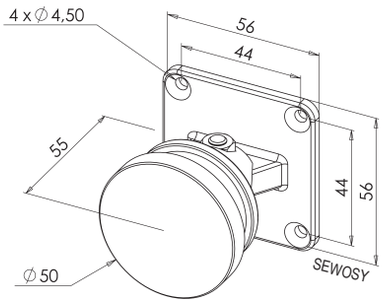

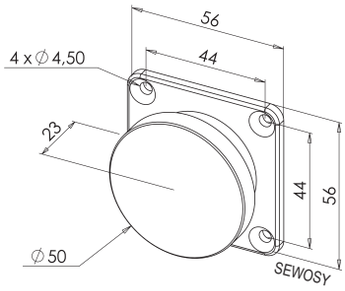

VELMAG™ ELECTROMAGNETIC LOCKS

surface-mount door holder devices

CE EN 1155
certificate n° 1239/CPR/0805501

- Low consumption
- Connection through screw terminal block
- Integrated protection diodes
- Armature plate to mount in a fixed or articulated position
- REED contact for open / closed door position (BRC models)

BR series

CHARACTERISTICS

Dimensions H x W x D	Magnet Armature plate		119,3 x 75 x 41,5 56 x 56 x 55	
V DC	24V DC		IP	30
ImA DC	BR242 BR244 BR245 BRC244 BRC245	16 mA 60 mA 60 mA 60 mA 60 mA	DaN	20* 40* 50* 40* 50*
V/A	BRC244 BRC245	175V DC-0,5 A		

* Indicative holding forces (minimum 90% guaranteed), for an implementation meeting the optimum laying conditions
CAUTION: for interior use (IP30)

BR242	Electromagnetic door holder surface rectangular box 24 VDC-20 DaN - EN1155 n° 0805501	0,83 kg
BR244	Electromagnetic door holder surface rectangular box 24 VDC-40 DaN - EN1155 n° 0805501	0,83 kg
BR245	Electromagnetic door holder surface rectangular box 24 VDC-50 DaN - EN1155 n° 0805501	0,83 kg
BRC244	Electromagnetic door holder surface rectangular box - with contact 24 VDC-40 DaN - EN1155 n° 0805501	0,83 kg
BRC245	Electromagnetic door holder surface rectangular box - with contact 24 VDC-50 DaN - EN1155 n° 0805501	0,83 kg

Customs code 83014019

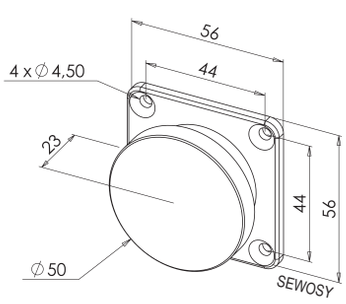

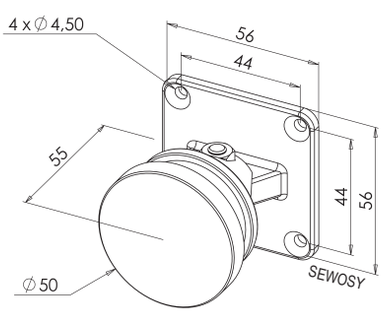

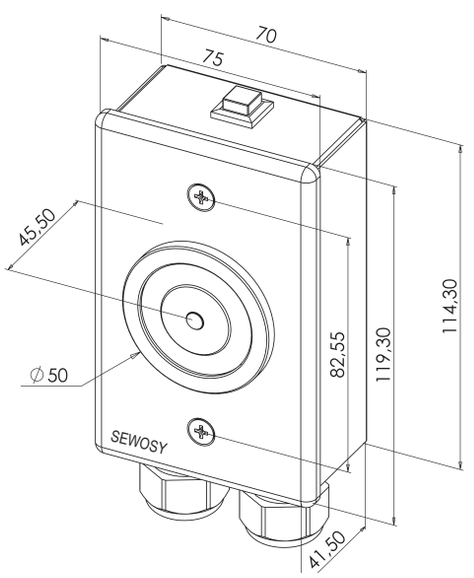

VELMAG™ ELECTROMAGNETIC LOCKS

surface-mount door holder devices

CE EN 1155
certificate n° 1239/CPR/0805501

- Low consumption
- Connection through screw terminal block
- Integrated protection diodes
- Armature plate to mount in a fixed or articulated position
- REED contact for open / closed door position (BRC models)

BR series

CHARACTERISTICS

Dimensions H x W x D	Magnet Armature plate		119,3 x 75 x 41,5 56 x 56 x 55	
V DC	48V DC		IP	30
ImA DC	BR482 BR484 BRC484	13 mA 32 mA 32 mA	DaN	20* 40* 40*
V/A	BRC484		175V DC-0,5 A	

* Indicative holding forces (minimum 90% guaranteed), for an implementation meeting the optimum laying conditions
CAUTION: for interior use (IP30)

BR482	Electromagnetic door holder surface rectangular box 48 VDC-20 DaN - EN1155 n° 0805501	0,8 kg	
BR484	Electromagnetic door holder surface rectangular box 48 VDC-40 DaN - EN1155 n° 0805501	0,8 kg	
BRC484	Electromagnetic door holder surface rectangular box - with contact 48 VDC-40 DaN - EN1155 n° 0805501	0,8 kg	Customs code 83014019

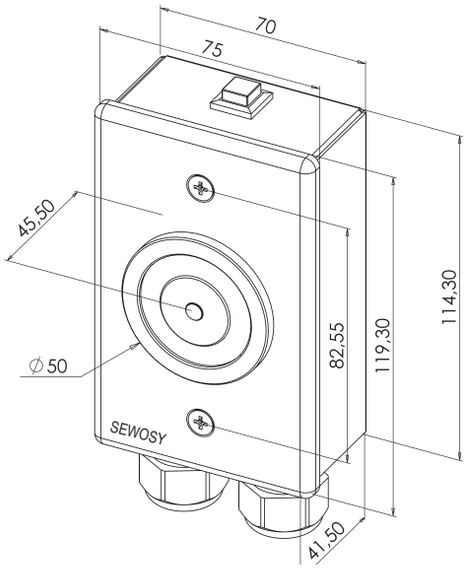

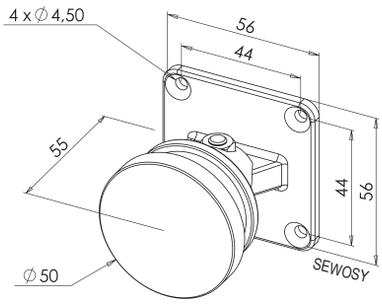

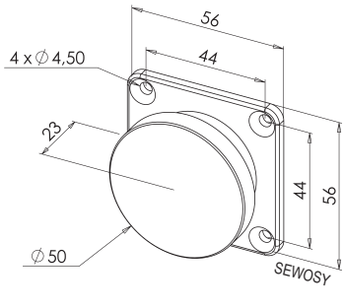

SEWOSY

VELMAG™ ELECTROMAGNETIC LOCKS

mortise-mount door holder devices

CE EN 1155
certificate n° 1239/CPR/0805501

- Low consumption
- Mounting on electric pot (diameter 60)
- Connection through screw terminal block
- Integrated protection diodes
- Armature plate to mount in a fixed or articulated position
- REED contact for open / closed door position (BCEC models)

BCE series

CHARACTERISTICS

Dimensions H x W x D	Magnet Armature plate PB1011	85 x 85 x 36,9 mm 56 x 56 x 55 61 x 61 x 22			
V DC	24V DC		IP	Magnet PB1011	30 20
ImA DC	BCE242 BCE244 BCE245 BCEC244 BCEC245	16 mA 60 mA 60 mA 60 mA 60 mA	DaN	20* 40* 50* 40* 50*	
V/A	BCEC244 BCEC245	175V DC-0,5 A			
	PB1011	250V AC / 10 A - 24V DC / 1 A			

* Indicative holding forces (minimum 90% guaranteed), for an implementation meeting the optimum laying conditions
CAUTION: for interior use (IP30)

MORTICE VERSIONS:
According to EN1155 the mortise-mount models have to be mounted with an additional remote hand release switch (which must be ordered separately).

PB1011

BCE242	Square mortise electromagnetic door holder 24 VDC-20 DaN - EN1155 n° 0805501	0,65 kg	
BCE244	Square mortise electromagnetic door holder 24 VDC-40 DaN - EN1155 n° 0805501	0,8 kg	
BCE245	Square mortise electromagnetic door holder 24 VDC-50 DaN - EN1155 n° 0805501	0,8 kg	
BCEC244	Square mortise electromagnetic door holder - with contact 24 VDC-40 DaN - EN1155 n° 0805501	0,65 kg	
BCEC245	Square mortise electromagnetic door holder - with contact 24 VDC-50 DaN - EN1155 n° 0805501	0,65 kg	Customs code 83014019
PB1011	Plastic (ABS) hand release switch	0,06 kg	Customs code 85365080

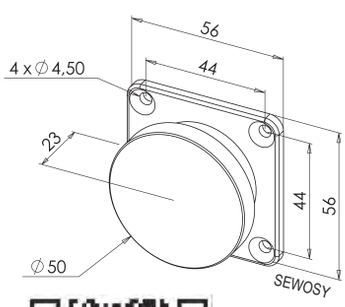

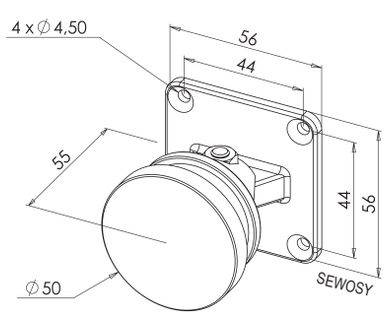

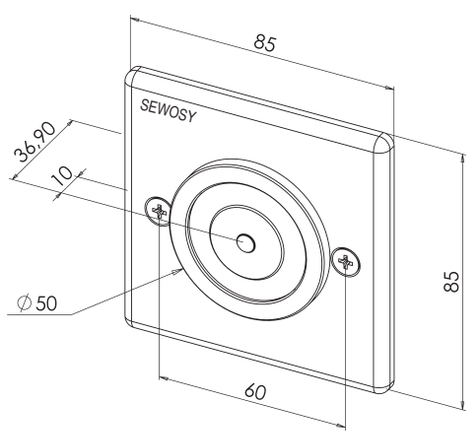

VELMAG™ ELECTROMAGNETIC LOCKS

mortise-mount door holder devices

CE EN 1155
certificate n° 1239/CPR/0805501

- Low consumption
- Mounting on electric pot (diameter 60)
- Connection through screw terminal block
- Integrated protection diodes
- Armature plate to mount in a fixed or articulated position
- REED contact for open / closed door position (BCEC models)

BCE series

CHARACTERISTICS

Dimensions H x W x D	Magnet Armature plate PB1011	85 x 85 x 36,9 mm 56 x 56 x 55 61 x 61 x 22			
V DC	48V DC		IP	Magnet PB1011	30 20
ImA DC	BCE482 BCE484 BCEC484	13 mA 32 mA 32 mA	DaN	20* 40* 40*	
V/A	BCEC484 PB1011	175V DC-0,5 A 250V AC / 10 A - 24V DC / 1 A			

* Indicative holding forces (minimum 90% guaranteed), for an implementation meeting the optimum laying conditions
CAUTION: for interior use (IP30)

MORTICE VERSIONS:
According to EN1155 the mortise-mount models have to be mounted with an additional remote hand release switch (which must be ordered separately).

PB1011

BCE482	Square mortise electromagnetic door holder 48 VDC-20 DaN - EN1155 n° 0805501	0,62 kg	
BCE484	Square mortise electromagnetic door holder 48 VDC-40 DaN - EN1155 n° 0805501	0,65 kg	
BCEC484	Square mortise electromagnetic door holder - with contact 48 VDC-40 DaN - EN1155 n° 0805501	0,65 kg	Customs code 83014019
PB1011	Plastic (ABS) hand release switch	0,06 kg	Customs code 85365080

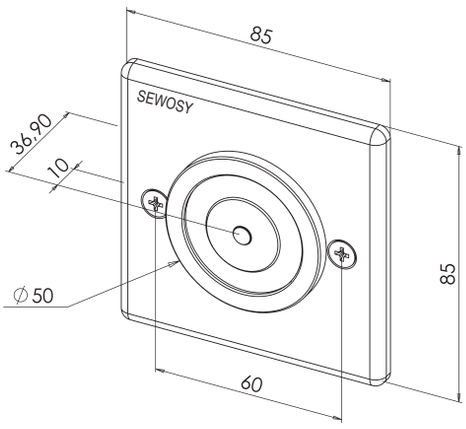

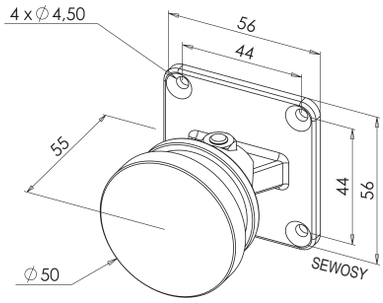

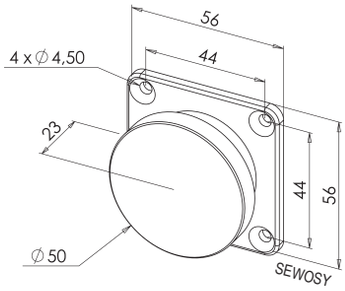

SEWOSY

VELMAG™ ELECTROMAGNETIC LOCKS

universal mounting accessories

- Adaptable to the desired size
- Laying on floor, wall, ceiling
- Possible lacquering in all RAL colors

SMSP200

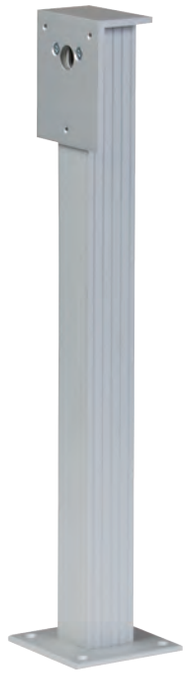

SMSP400

CHARACTERISTICS

Dimensions H x W x D	SMSP200 SMSP400	200 x 80 x 80 400 x 80 x 80

SMSP200	Aluminium distance post + bracket (wall/floor/ceiling mounting) length: 200 mm	0,4 kg	
SMSP400	Aluminium distance post + bracket (wall/floor/ceiling mounting) length: 400 mm	0,7 kg	Customs code 83014019
POWDER COATING	On request - all RAL colors available		

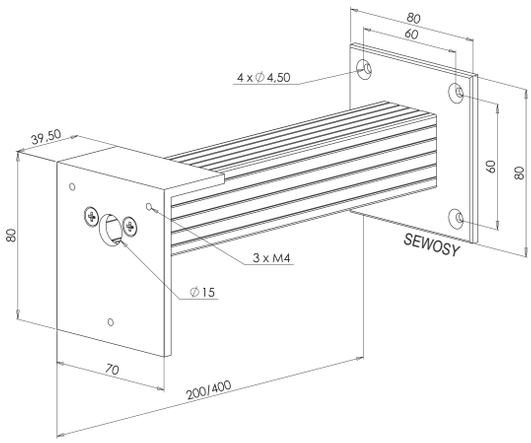

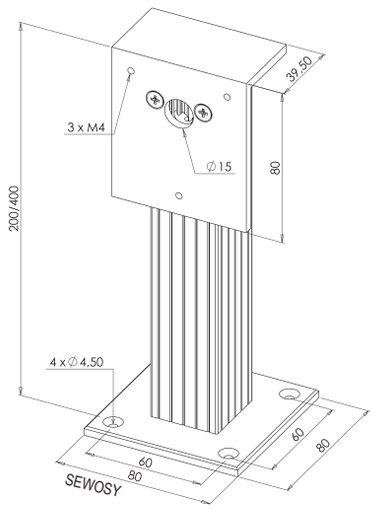

VELMAG™ ELECTROMAGNETIC LOCKS

floor-mounting accessories

- Increased resistance to vandalism (SBCAV)

EBCS

EBRS

SBCAV

CHARACTERISTICS

Dimensions H x W x D	EBCS EBRS SBCAV	80 x 80 x 39,5 118,5 x 70 x 39,5 110 x 165 x 93

EBCS	Bracket for surface mounting squared box versions (floor mounting)	0,06 kg	
EBRS	Bracket for surface mounting rectangular box versions (floor mounting)	0,06 kg	Customs code 83014019
SBCAV	Reinforced base casing floor mounting for range BCE	0,6 kg	Customs code 82051000

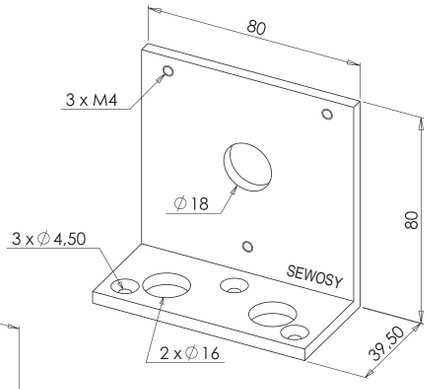

EBCS

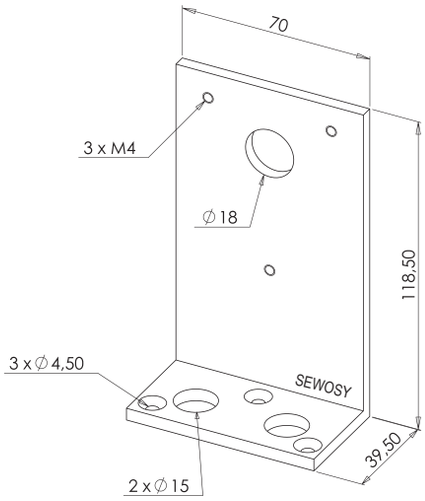

EBRS

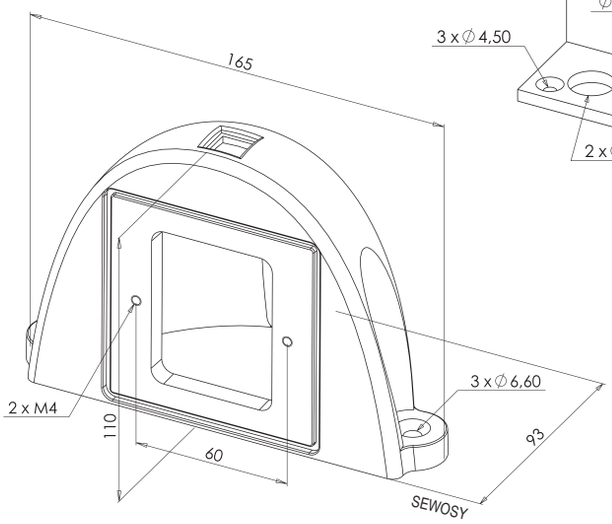

SBCAV

NOTES

INDEX

396ESCPC	221
396ISO1EM1	206
396ISO1EM1	208
396ISO1EM1	209
396ISO1EM1	216
396ISO1EM1LG256	218
396ISO1EM1+MF1	218
396ISO1HT2	216
396ISO1LG256	217
396ISO1LG1024	217
396ISO1MF1	207
396ISO1MF1	217
396ISO1MF1HT2	218
396ISO1MF1LG256	218
396ISO1MF1LG256EM1	218
396ISO1MF1LG256HT2	218
396ISO1MF4HT2	218
396ISO1MFDF	217
396ISO1MFUL	217
396ISO1TM5557	216
396MOUS	221
396P1EM1	219
396P1HT1	219
396P1HT2	219
396P1LG256	220
396P1MF1	207
396P1MF1	220
396P1MF4	220
396P1TM5557	219
396P2MF1	220
396RING	221
396SHEM1	206
396SHEM1	208
396SHEM1	209
396SHEM1	219
396SHMF1	220
396SHTM5557	219
396WD1EM1	219
396WD1HT1	219
396WD1HT2	219
396WD1LG256	220
396WD1MF1	220
396WD1MF4	220
396WD1TM5557	219
2212PLTIPR	294
AC1.3-12	239
AC2.4-12	239
AC7-12	239
AC18-12	239
AC26-12	239
AC40-12	239
AD1203GR	226
AD1203R	226
AD1205GR	226

AD1205R	226
AD1210R	228
AD1220R	231
AD2405R	227
AD2410R	228
AD24025R	227
ADCAB3	232
ADCCTV1203-04	230
ADCCTV1205-08	230
ADCCTVS1203-04	229
ADCCTVS1205-08	229
ADCCTVS1208-09	229
ADR1210-08	232
ADR1220-16	232
BC242	296
BC244	296
BC245	296
BC482	297
BC484	297
BCC244	296
BCC245	296
BCC484	297
BCE242	300
BCE244	300
BCE245	300
BCE482	301
BCE484	301
BCEC244	300
BCEC245	300
BCEC484	301
BR242	298
BR244	298
BR245	298
BR482	299
BR484	299
BRC244	298
BRC245	298
BRC484	299
CAC1M	285
CAC1MAP	285
CAC1ME	284
CAC1U	286
CAC1UAP	286
CAC2M	285
CAC2MAP	285
CAC2ME	284
CAC2U	286
CAC2UAP	286
CBPCF	257
CBPCFC4	257
CEB200	200
CPG-E	45
CPREG-1/400AS	130
CPREG-1/400B	130

CPREG-1/600AS	128
CPREG-1/600B	128
CPREG-1/2500AS	126
CPREG-1/2500B	126
CPREG-1/3000AS	124
CPREG-1/3000B	124
CPREG-1/CUT	132
CPREG-1/RES	132
CPREG-2/40AS	144
CPREG-2/40B	144
CPREG-2/60AS	142
CPREG-2/60B	142
CPREG-2/220AS	140
CPREG-2/220B	140
CPREG-2/250AS	138
CPREG-2/250B	138
CPREG-2/300AS	136
CPREG-2/300B	136
CPREG-2/CUT	146
CPREG-2/RES	146
CPREG-3/S1AS	152
CPREG-3/S1B	152
CPREG-3/S2AS	151
CPREG-3/S2B	151
CPREG-3/S4AS	150
CPREG-3/S4B	150
CPREG-4/S1AS	164
CPREG-4/S1B	164
CPREG-4/S2AS	163
CPREG-4/S2B	163
CPREG-4/S4AS	162
CPREG-4/S4B	162
CPREG-5/S1AS	174
CPREG-5/S1B	174
CPREG-5/S2AS	173
CPREG-5/S2B	173
CPREG-5/S4AS	172
CPREG-5/S4B	172
CPREG-E/40AS	144
CPREG-E/40B	144
CPREG-E/60AS	142
CPREG-E/60B	142
CPREG-E/220AS	140
CPREG-E/220B	140
CPREG-E/250AS	138
CPREG-E/250B	138
CPREG-E/300AS	136
CPREG-E/300B	136
CPREG-P/400AS	131
CPREG-P/400AS	145
CPREG-P/400B	131
CPREG-P/400B	145
CPREG-P/600AS	129
CPREG-P/600AS	143

CPREG-P/600B	129
CPREG-P/600B	143
CPREG-P/2200AS	141
CPREG-P/2200B	141
CPREG-P/2500AS	127
CPREG-P/2500AS	139
CPREG-P/2500B	127
CPREG-P/2500B	139
CPREG-P/3000AS	125
CPREG-P/3000AS	137
CPREG-P/3000B	125
CPREG-P/3000B	137
CPREG-S/400AS	131
CPREG-S/400AS	145
CPREG-S/400B	131
CPREG-S/400B	145
CPREG-S/600AS	129
CPREG-S/600AS	143
CPREG-S/600B	129
CPREG-S/600B	143
CPREG-S/2200AS	141
CPREG-S/2200B	141
CPREG-S/2500AS	127
CPREG-S/2500AS	139
CPREG-S/2500B	127
CPREG-S/2500B	139
CPREG-S/3000AS	125
CPREG-S/3000AS	137
CPREG-S/3000B	125
CPREG-S/3000B	137
DBC1330/A	267
DBC1331/C	267
DC2	243
DC4	243
DLB7	247
DLB10	247
DLI7	246
DLI7/30	246
DLI10	246
DLMC	250
DLMC170	251
DLMC210	251
DLMC390	251
DLN7	248
DLN10	248
DLRI10	249
DLRI10EC	249
DLS170	250
DLS210	250
DLS390	250
DMC	290
DMC	291
DMC	292
DMC	293

DMC	294
DMK	294
DMR1	292
DMR1C	292
DMR2	292
DMR2C	292
DMV1	290
DMV1BL	291
DMV1C	290
DMV1CBL	291
DMV2	290
DMV2C	290
DMW1	293
DMW1C	293
DMW2	293
DMW2C	293
EBCS	303
EBRS	303
ECRLB7	247
ECRLB10	247
ECRLI7	246
ECRLI10	246
ECRLN7	248
ECRLN10	248
EF150	94
EF150-2	95
EF150-2CTC	95
EF150CTC	94
EF150ENC CA	82
EF150ENCCTC CA	82
EF150L	96
EF150U	96
EF150ZL	96
EF200ENC CA	184
EF200ENC CA-B	185
EF200ENCCTC CA	184
EF200ENCCTC CA-B	185
EF200ENCCTC CA-BV	186
EF300	98
EF300-2	99
EF300-2CTC	99
EF300_550UL	101
EF300_550UL	109
EF300_550UZAP	101
EF300_550UZAP	109
EF300/550Z	100
EF300/550Z	103
EF300/550Z	108
EF300/550Z	111
EF300C	102
EF300C/AEC	102
EF300CTC	98
EF300ENC	90
EF300ENC CA	83

EF300ENCCTC CA	83
EF300L	100
EF300L-2	103
EF300SCP	101
EF550	104
EF550-2	106
EF550-2CTC	106
EF550-2CTC/I	107
EF550-2/I	107
EF550C	110
EF550C/AEC	110
EF550CTC	104
EF550CTC/I	105
EF550ENC CA	86
EF550ENCCTC CA	86
EF550/I	105
EF550L	108
EF550L-2	111
EF550SCP	109
EF30035ENC	91
EF30035ENC CA	85
EF30035ENCCTC CA	85
EFT-C-RACT2-	41
EFT-C-RACT9-	41
EFT-C-RACTA-	41
EFT---RACT2-	40
EFT---RACT9-	40
EMK826AT 6M	264
EXT200CTC	114
EXT200L	115
EXT200Z	115
EXT400CTC	116
EXT400CTCNF	118
EXT400CTCNFP	119
EXT400CTCNFT	119
EXT400L	117
EXT400Z	117
EXT750CTC	120
EXT750L	121
EXT750Z	121
GDES400	48
K1000	204
KITCPREG-3/S1NUAS	157
KITCPREG-3/S1NUB	157
KITCPREG-3/S1V1AS	156
KITCPREG-3/S1V1B	156
KITCPREG-3/S2NUAS	155
KITCPREG-3/S2NUB	155
KITCPREG-3/S2V1AS	154
KITCPREG-3/S2V1B	154
KITCPREG-3/S2V2AS	153
KITCPREG-3/S2V2B	153
KITCPREG-4/S1NUAS	169
KITCPREG-4/S1NUB	169

KITCPREG-4/S1V1AS	168
KITCPREG-4/S1V1B	168
KITCPREG-4/S2NUAS	167
KITCPREG-4/S2NUB	167
KITCPREG-4/S2V1AS	166
KITCPREG-4/S2V1B	166
KITCPREG-4/S2V2AS	165
KITCPREG-4/S2V2B	165
KITCPREG-5/S1NUAS	179
KITCPREG-5/S1NUB	179
KITCPREG-5/S1V1AS	178
KITCPREG-5/S1V1B	178
KITCPREG-5/S2NUAS	177
KITCPREG-5/S2NUB	177
KITCPREG-5/S2V1AS	176
KITCPREG-5/S2V1B	176
KITCPREG-5/S2V2AS	175
KITCPREG-5/S2V2B	175
KITCPREG12-V	132
KITCPREG12-V	146
KN1000	204
KR1000	206
KR1000-M	207
KR1000-W	208
KRN1000	206
LP-W	209
MS901/ALW2	265
MS901/CLW2	265
MS901/CW2	265
MS908/AT	263
MS910/ALW2	263
MS910/AW2	263
MS910/CLW2	263
MS910/CW2	263
MS911/ALW2	266
MS911/AW2	266
MS911/CLW2	266
MS911/CW2	266
MS915/ALW2	258
MS915/AT	258
MS915/AW2	258
MS915/CLW2	258
MS915/CW2	258
MS915MS	258
MS916/ALW2	259
MS916/AT	259
MS916/AW2	259
MS916/CLW2	259
MS916/CW2	259
MS918/AT	256
MS918/AW50	256
MS918/CW4	256
NL100 10 17 A KP	264
NL100 10 22 C KP	264

NL100 10 23 A KP	264
NL100 10 25 C KP	264
NL100 10 30 C KP	260
NL100 10 33 C KP	260
NL100 10 34 A KP	260
NL100 10 35 A KP	260
NL10059MD	260
NLEXB-15-2-04	261
NLEXB-15-3-04	261
NLEXB-15-4-04	261
NLEXB-15-5-04	261
NLEXB-20-3-04	261
NLEXB-20-4-04	261
NLEXDMC-15-2-04	262
NLEXDMC-15-3-04	262
NLEXDMC-15-4-04	262
NLEXDMC-20-2-04	262
NLEXDMC-20-3-04	262
NLEXDMC-20-4-04	262
NLEXDMC-20-5-04	262
NLM-12-91-1-2M	253
NLM-12-91-3-6M	253
NLM-13-30-1-2M	252
NLM-13-30-4-6M	252
NUANCIER	132
NUANCIER	146
NUANCIER	158
NUANCIER	170
NUANCIER	180
PB19_BBL2	280
PB19_BBL2-B12	280
PB19_BBL2E	281
PB19_BBL2E-B12	281
PB19NO	274
PB19NO+NC	270
PB19NO+NC_4FS	272
PB19NO+NC_4FS_SI	273
PB19NO+NC/B12	270
PB19NO+NC_B12_6FS	272
PB19NO+NC_B12_6FSI	273
PB19NO+NC_B12_SI	271
PB19NO+NC_B12_ST	274
PB19NO+NC_B12ST_SI	275
PB19NO+NC_G12_6FS	272
PB19NO+NC_G12_6FSI	273
PB19NO+NC_G12_SI	271
PB19NO+NC_G12_ST	274
PB19NO+NC_G12ST_SI	275
PB19NO+NC_R12_6FSI	273
PB19NO+NC_R12_SI	271
PB19NO+NC_R12_ST	274
PB19NO+NC_R12ST_SI	275
PB19NO+NC_SI	271
PB19NO+NC_ST	274

PB19NO+NC_ST_SI	275
PB19NO_SI	275
PB-21-B	221
PB-21-NR	221
PB1010	278
PB1011	300
PB1011	301
PBHI1	277
PBHI1	281
PBHI2	277
PBHI2	280
PBMR	278
PBP19_3	276
PBP19_4	276
PBP19_B	276
PBP19/FL	276
PBP19_TL	276
PBWS410-2	279
PBWS410-2MBOX	279
PBWS410-2SBOX	279
PCBSMPL12	233
PCBSMPL24	234
PS1201SML	233
PS1202SML	233
PS1203SML	233
PS1205SML	233
PS2401SML	234
PS2402SML	234
PS2403SML	234
PS2405SML	234
PSCONV4824	238
PSDIN1230	235
PSDIN1245	235
PSDIN1260	235
PSDIN2430	236
PSDIN2445	236
PSDIN2460	236
PSDIN4830	237
PSDIN4845	237
PSDIN4860	237
PTM1224	244
PTS71C	242
PTS72C	242
RLB7	247
RLB10	247
RLI7	246
RLI10	246
RLN7	248
RLN10	248
RM61224	244
SBCAV	303
SE1	72
SE1APCGM	57
SE1APCGM12	57

SE1APCGM24	57
SE1APCPM	53
SE1APCPM12	53
SE1APCPM24	53
SE1APGM	56
SE1APGM12	56
SE1APGM24	56
SE1APPM	52
SE1APPM12	52
SE1APPM24	52
SE1O	73
SE2	74
SE2MI	68
SE2MIO	68
SE2O	75
SE3	77
SE3APCGM12	59
SE3APCGM24	59
SE3APCPM12	55
SE3APCPM24	55
SE3APGM12	58
SE3APGM24	58
SE3APPM12	54
SE3APPM24	54
SE112	76
SE212	76
SE000222	10
SE000225	10
SE000226	10
SE000227	10
SE000228	12
SE000229	12
SE000231	12
SE000232	12
SE000237	13
SE000238	13
SE000243	11
SE000244	11
SE000246	14
SE000249	14
SE000250	14
SE000251	14
SE000261	15
SE000262	15
SE000264	16
SE000267	16
SE000270	17
SE000273	17
SE000297	18
SE000298	18
SE000309	19
SE000310	19
SEA190_DL	62
SEA190_DR	63

SEA290_DL	62
SEA290_DR	63
SEA390_DL	62
SEA390_DR	63
SEA1120_DL	64
SEA1120_DR	65
SEA2120_DL	64
SEA2120_DR	65
SEA3120_DL	64
SEA3120_DR	65
SEE1	24
SEE1D12	24
SEE1D24	24
SEE1L	25
SEE1LD12	25
SEE1LD24	25
SEE2	26
SEE2L	26
SEE3D12	27
SEE3D24	27
SEF201	21
SEF201	28
SEF201	35
SEF201	42
SEF201	69
SEF201	78
SEF202	30
SEF203	21
SEF203	28
SEF203	35
SEF203	42
SEF203	69
SEF203	78
SEF301	21
SEF301	28
SEF301	35
SEF301	42
SEF301	69
SEF301	78
SEF401DD	20
SEF401DG	20
SEF10009	36
SEF10009	43
SEF10013	36
SEF10013	43
SEF10049	37
SEF10049	44
SEF10053	37
SEF10053	44
SEF10069	37
SEF10069	44
SEF10073	37
SEF10073	44
SEL001	20

SEM1B	32
SEM1CB	32
SEM1CR	33
SEM1CRCF	30
SEM1LB	32
SEM1LR	33
SEM1R	33
SEM3CR	34
SEM3R	34
SH540	87
SH540BT	87
SH540CTC	87
SH540U	87
SMSP200	302
SMSP400	302
SPDBC13	196
SPDBC13CY30	197
SPP1TCY35	192
SPP3T2C	194
SPP3T2C-AP	194
SPP3TCB	193
TPNC	244
TR1224PTC	238
V30035	84
V30035C	84
VR200-80A	190
VR200-80L	190

NOTES

DISCOVER OUR LATEST NEWS ON

www.sewosy.eu

The website is multilingual: French - English and German

- Our references daily updated:

- One filter per criteria to quickly find products:

- Our news:

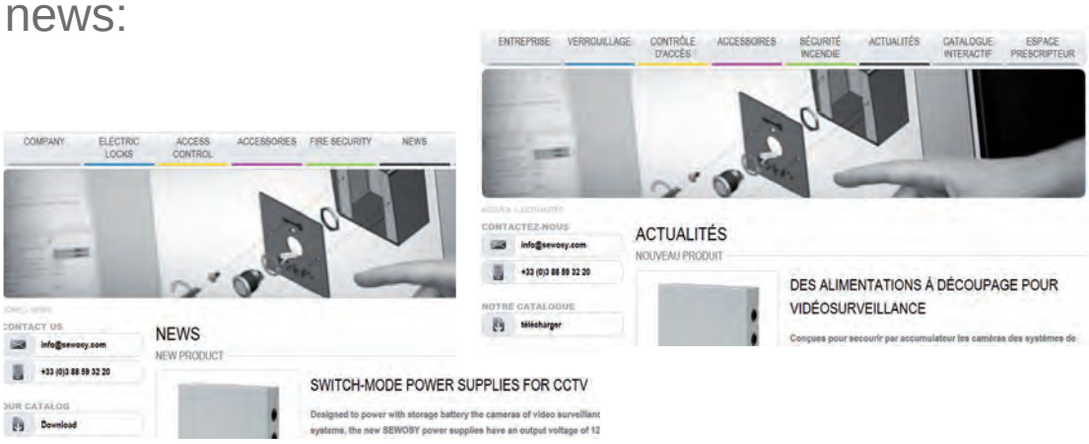

GENERAL TERMS OF SALE

1. GENERAL

Sales relating to our supplies are governed by these general terms of sale subject to specific terms that could be specified in agreements and exclude any general terms that could appear in any of the client's documents.
Catalogues, instructions, leaflets, flyers and exhibited equipment are not firm offers to sell on our part. Indeed, we reserve the right to make any improvement and change thereto as we deem useful, without having to make such improvements and changes to previously supplied or currently ordered devices.
The sale agreement is not completed until the client confirms the order.

2. PACKAGING

Our equipment, spare parts and other supplies are offered under standard packaging. Any request for special packaging shall be charged extra. Our packaging shall not be taken back

3. ORDERS

The net MINIMUM AMOUNT per ORDER is EUR 100.00 before taxes.
Any order under that amount that be increased to that amount.
We do not accept verbal orders. Orders are to be sent to us by mail or by fax, and cannot be cancelled without our formal agreement. In the event the client fails to perform its present duties (instalment payment) or past duties (payment of previous orders) we reserve the right to suspend our deliveries and request immediate and full payment for work and supply performed and delivered.

4. DELIVERIES

The delivery dates specified in our order confirmations are given for information only. We decline any responsibility relating to delivery dates :

a) In the event the payment terms have not been fulfilled by the client
b) In the event the information to be supplied by the client does not reach us in time
c) In the event of force majeure or unforeseen events such as lock outs, strikes, epidemics, war, requisition, fire, floods, tooling accident, rejection of important parts during the manufacturing process, transport interruptions or delays, or any other cause resulting in partial or total work interruption at our plants or our suppliers'. The equipment, spare parts are other supplies are delivered subject to availability and at the client's cost. They travel at the client's risks and the client shall express any reserve with the carrier upon receipt of the parcels.

5. PRICE, PAYMENT TERMS

The prices specified in our price lists are not biding and may be changed without notice.
The prices invoiced are the prices applicable at the time of the delivery.
Such prices do not include carriage, travelling costs, taxes, collection, stamp duties. Regarding carriage costs, we grant CARRIAGE FREE to border above EUR 750 before taxes, for single deliveries. Transport value insurance 4 for 1000 with a minimum payment amount set to EUR 5.5 for national activities.
General payment terms are 30 days after the invoice date, for any client holding an account in our books. Such terms are negotiable and may give rise to payment discounts or increases for any time exceeding the general payment terms.
Thus you will be granted a
2 % discount for a payment cash upon order
1 % discount for a payment within 8 DAYS
However, a extra charge will be applied in the following cases :

Payment at 30 days AFTER INVOICE DATE	0%
Payment at 30 days END OF MONTH	1%
Payment at 30 days on the 10TH OF THE FOLLOWING MONTH	1.5%
Payment at 60 days AFTER INVOICE DATE	2%
Payment at 60 days END OF MONTH	3%
Payment at 60 days on the 10TH OF THE FOLLOWING MONTH	3.5%
Payment at 90 days AFTER INVOICE DATE	4%
Payment at 90 days END OF MONTH	4.5%
Payment at 90 days on the 10TH OF THE FOLLOWING MONTH	5%

Note : payments terms are negotiated upon opening the account

In the event of late payments, outstanding amounts will bear interests at a rate of 12 % without this clause affecting the payability of the debt.
All payments should be made on the required date, and this is a condition precedent of all further deliveries.
First orders and orders under EUR 150 are delivered cash on delivery plus 5 % for handling costs based on the net values of the goods.
All costs incurred by our company for collecting, amicably or in court, payable amounts in principal, interests and costs, shall be paid by the client, which is bound hereto.

6. RETURNED PRODUCTS

Returned goods shall not be taken back without our prior consent. Their value shall not be credited to the buyer after deducting 20 % for handling and storage costs.
Special items and equipment as well as standard items supplied more than a year ago cannot be exchanged or taken back. Any return should be made carriage free.

7. RESERVATION OF TITLE

Invoiced goods remain our property until the full payment of the corresponding claim and increases pertaining thereto, even if such goods can be incorporated in other furniture or property. If the goods cannot be recovered, because they are already incorporated in other furniture or property, the failing party shall authorise use to collect our invoices directly from the user.

8. GUARANTEES

Our equipment is guaranteed against any manufacturing defect for a period of 12 months as from their delivery. Our guarantees are strictly limited to our supplies and cannot exceed the prompt repair or replacement at our cost and at our workshops, of any spare part unused as a result of defects. We reserve the right to change the systems in order to fulfil the guarantee, or replace defective parts. Spare parts replaced free of charge remain our property.
The guarantee shall not apply to replacements or repairs resulting from the normal wear of the devices, from deterioration, or accidents resulting from negligence, lack of supervision or the non-compliant maintenance or use of the devices.
Failure to comply with connection schematics and instructions exempts us from this guarantee. The same applies should the buyer carry out, without enquiring with us, any dismantling or handling of the devices.
We decline any civil liability resulting from direct or indirect consequences of the improper functioning of our equipment, whatever the reason therefore, even during the guarantee period.
Repairs, modifications or replacements of parts during the guarantee period shall not result in extending the initial guarantee period.
Except for the cases specified above, all other guarantees or compensation of any nature are excluded, and our client is and remains in all cases its own insurer, and shall not claim any clause or provision to the contrary.

9. TRAVELS – START UP

Unless the parties agree otherwise, any travel to a work site whatever the reason therefore (failure assessment, repair, start up, etc.) shall be the subject of a written order sent to our company. Our work will be charged based on the fixed prices mentioned in our applicable price lists.
Such fixed prices cover travel costs, accommodation, time spent, except for costly or important supplies, which will be charged separately.

10. DISPUTES –

Any dispute of any nature shall be brought before the courts of the registered address of SEWOSY, by formal agreement, notwithstanding any other jurisdictional clause even in the event of several defendants or impleaders. Bills of exchange, promissory notes or accepted drafts do not exempt from, or result in cancelling the provisions of this jurisdiction clause.

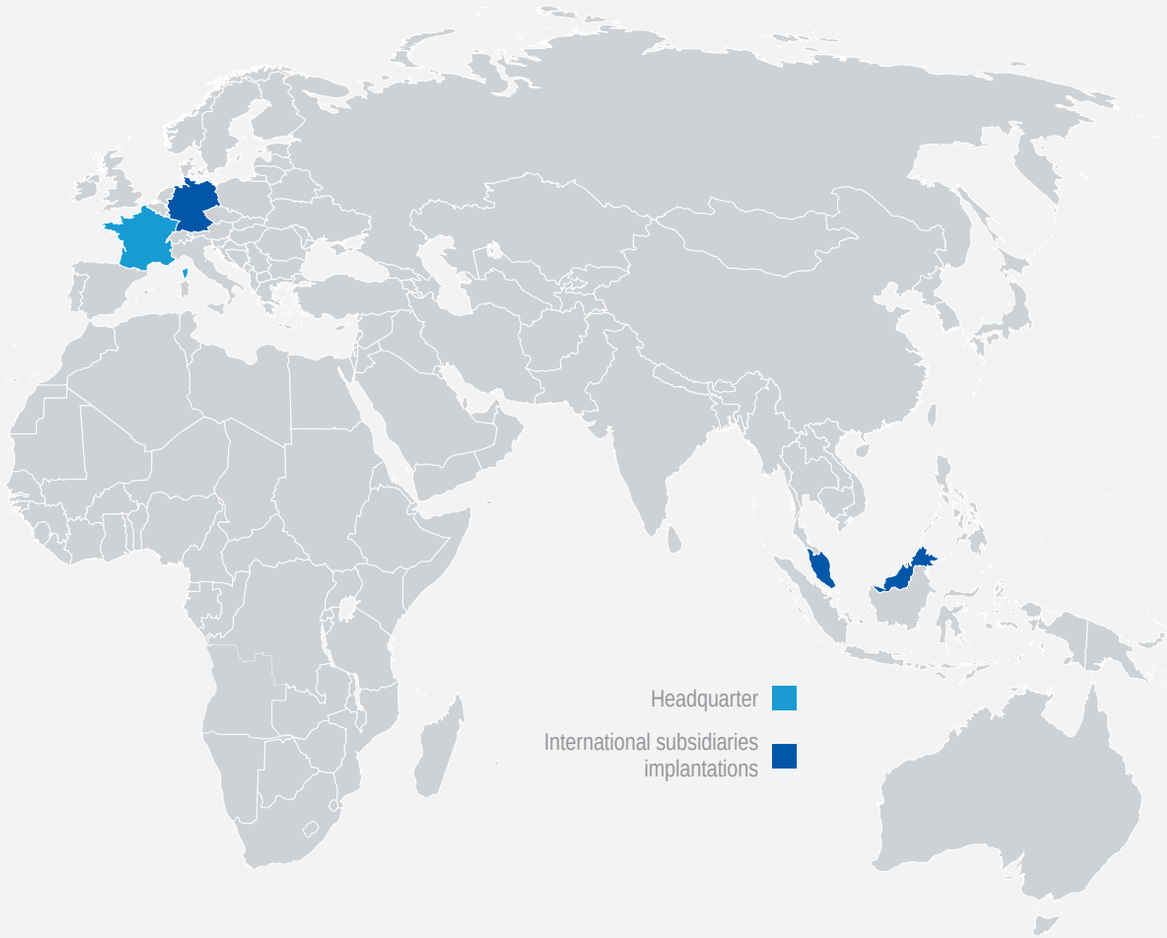

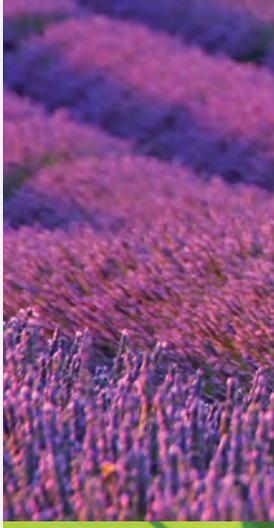

Printed by Imprimerie Centrale s.a. - Luxembourg Photos www.denismerck.com
R.C.S. LUXEMBOURG B 104983 - 2015

This document is not contractual – All rights reserved – Reproduction prohibited

ELECTRIC LOCKS - ACCESS CONTROL - ACCESSORIES - FIRE SECURITY

13b RUE SAINT EXUPERY ■ ZA DE L'AERODROME ■ CS 20152 F-67503 HAGUENAU CEDEX
Tél. : +33(0)3 90 59 02 20 - Fax : +33(0)3 90 59 02 19 - info@sewosy.com
www.sewosy.eu