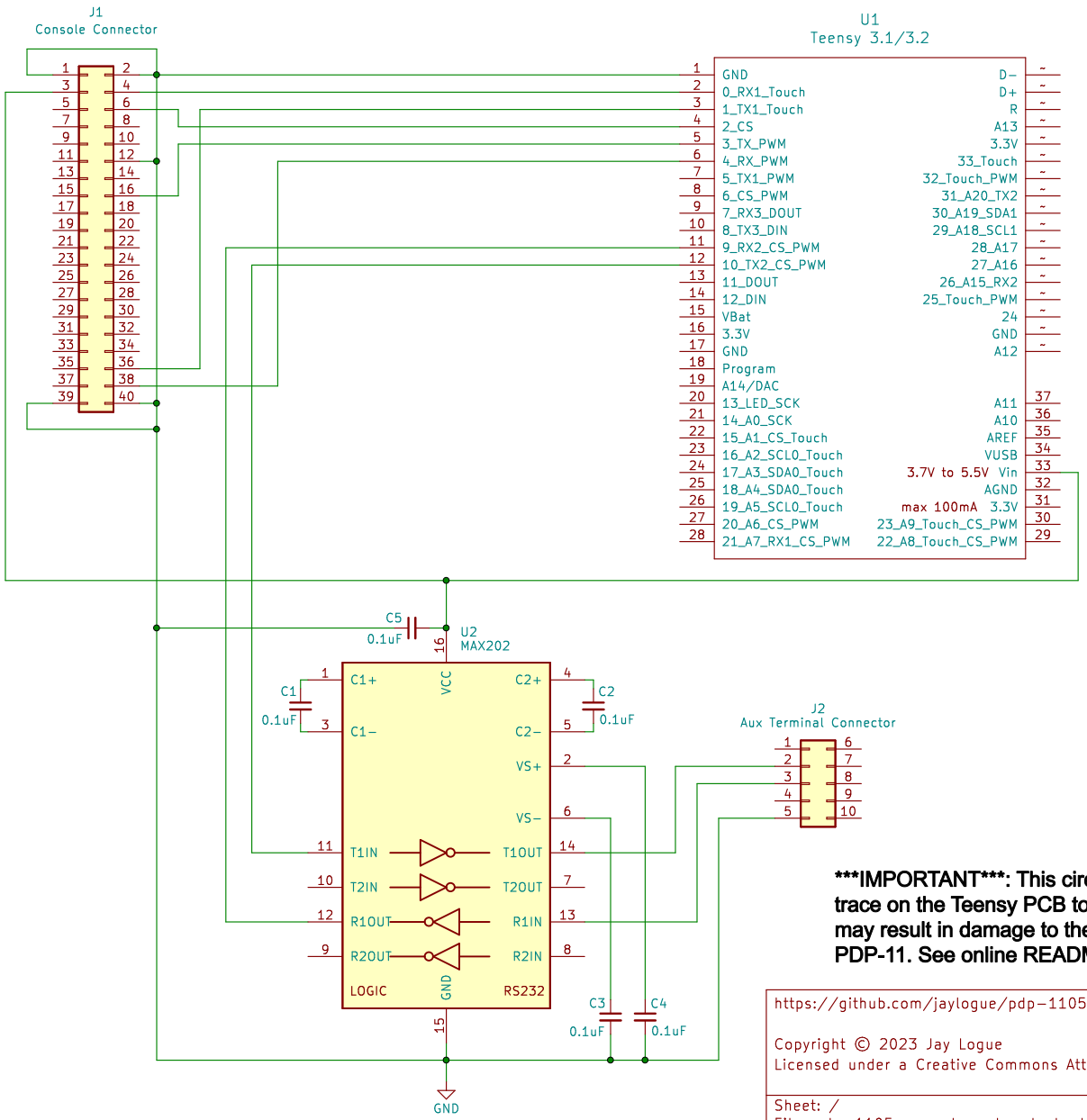

*****IMPORTANT***: This circuit requires the USB power trace on the Teensy PCB to be cut. Failure to do so may result in damage to the USB host computer or the PDP-11. See online README for instructions.**

https://github.com/jaylogue/pdp-1105-console-usb-adapter

Copyright © 2023 Jay Logue
Licensed under a Creative Commons Attribution 4.0 International License

Sheet: /
File: pdp-1105-console-usb-adapter.kicad_sch

Title: PDP-11/05 Console USB Adapter

Size: A	Date: 2023-11-19	Rev: 3.0
KiCad E.D.A. kicad 7.0.5		Id: 1/1