Microprocessors

TE 258

WEEK 1: INTRODUCTION
(Contd.)

Justice Owusu Agyemang, Department of Telecommunications Engineering, KNUST

Microprocessors & Microcontrollers

Recap

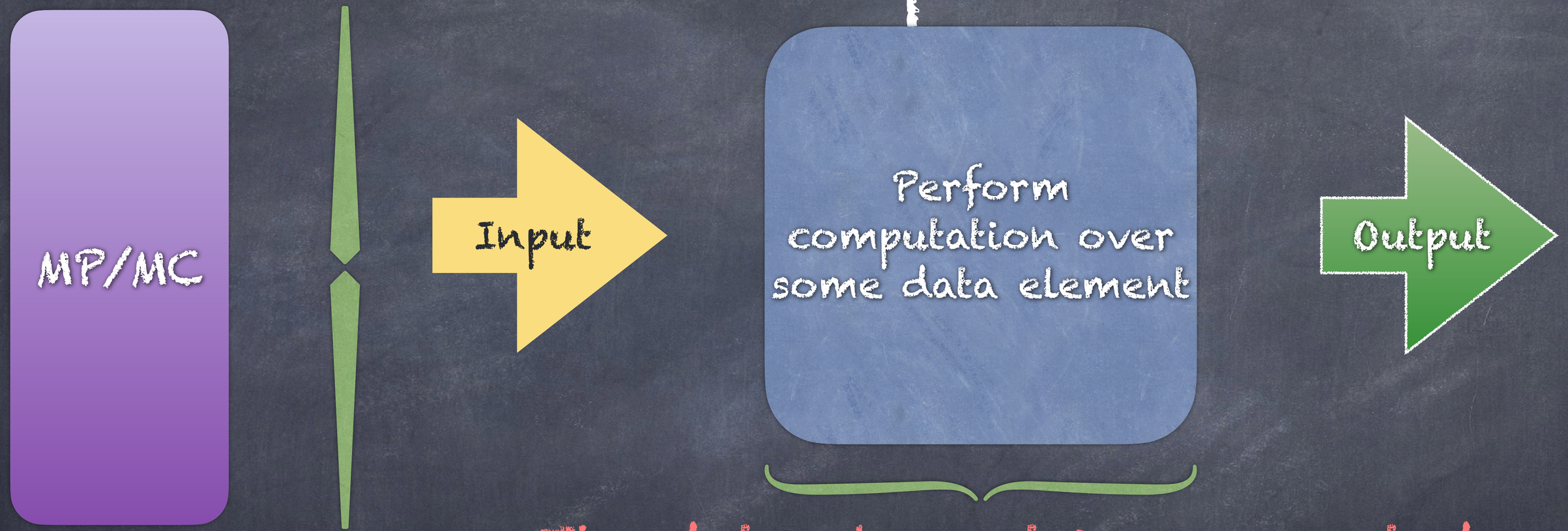

The data element is represented inside the system in a particular fashion.

Recap

The data element is represented inside the system in a particular fashion.

Representation of Numbers

Fundamental

↓

Number System Representation

Recap

- Number System Representation
  - Integer → +ve ✅
  - Integer → -ve ?
  - Character → Code → ASCII
  - Real Numbers

Reading Assignment

Quiz 1

1. State 5 differences between a microprocessor and a microcontroller.

2. Convert 2.75_{10} to binary.

Representation of Negative Numbers

Introduction (Contd.)

Representation of -ve Numbers

1's Complement

2's Complement

Introduction (Contd.)

1's Complement

In 1's complement representation, the complement of each of the bits represent a negative number.

Example:

Represent the number -4 in a 4-bit number system.

Introduction (Contd.)

1's Complement

The problem with the 1's complement representation.

1. Same representation for different numbers.
2. Different representations for the same number.

Introduction (Contd.)

2's Complement

How does 2's complement address the issues with the 1's complement representation?

NB: The 2's complement can represent

$$-2^{n-1} \quad \rightarrow \quad 2^{n-1} - 1$$

sequence of numbers.

Introduction (Contd.)

Critical Thinking:

How is the following expression executed?

$55 - 44$

For processing "represented data", we need

↓

Digital Logic Circuits

Digital Logic Circuits

Popular Technologies

TTL

CMOS

TTL

Logic High > 2.4v
Logic Low < 0.5v

CMOS

Logic High
0.3 * (VDD - VSS)

Digital Logic Circuits

TTL

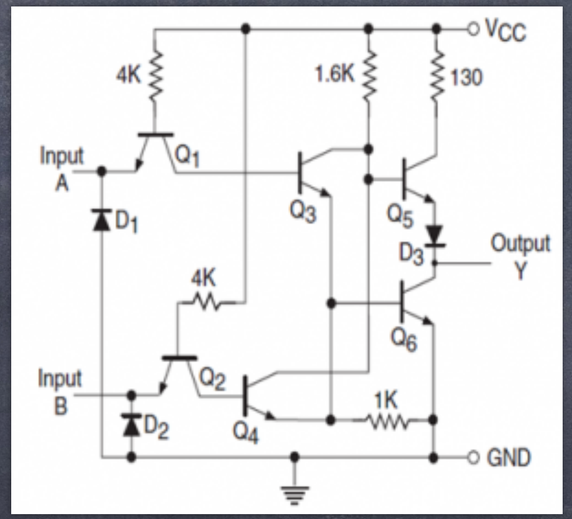

NOR Gate

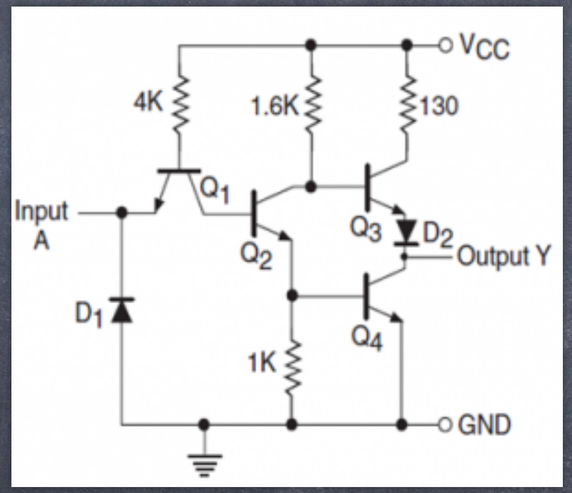

NOT Gate

Digital Logic Circuits

Classification of Digital Circuits

Combinational

Depends on the current input only.

Logic Gates

Sequential

Depends on the current state + input.

Digital Logic Circuits

Example:

3-input majority gate.

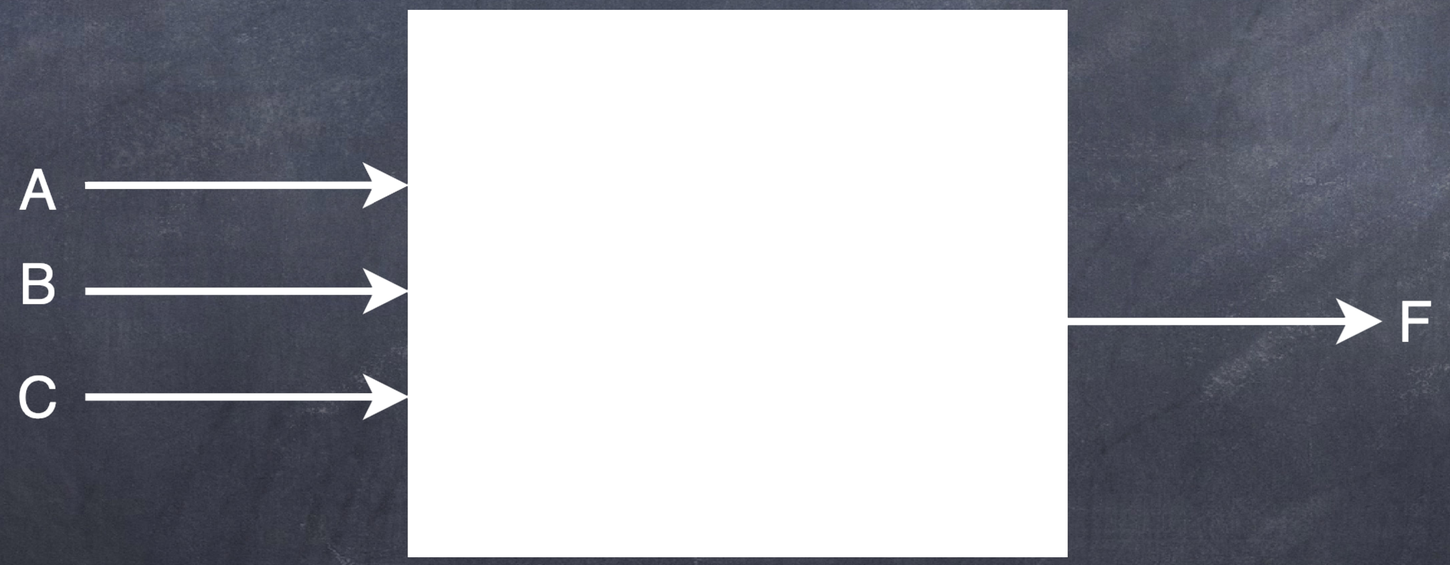

Digital Logic Circuits

One very common circuit used in microprocessors and microcontrollers is the Adder Circuit.

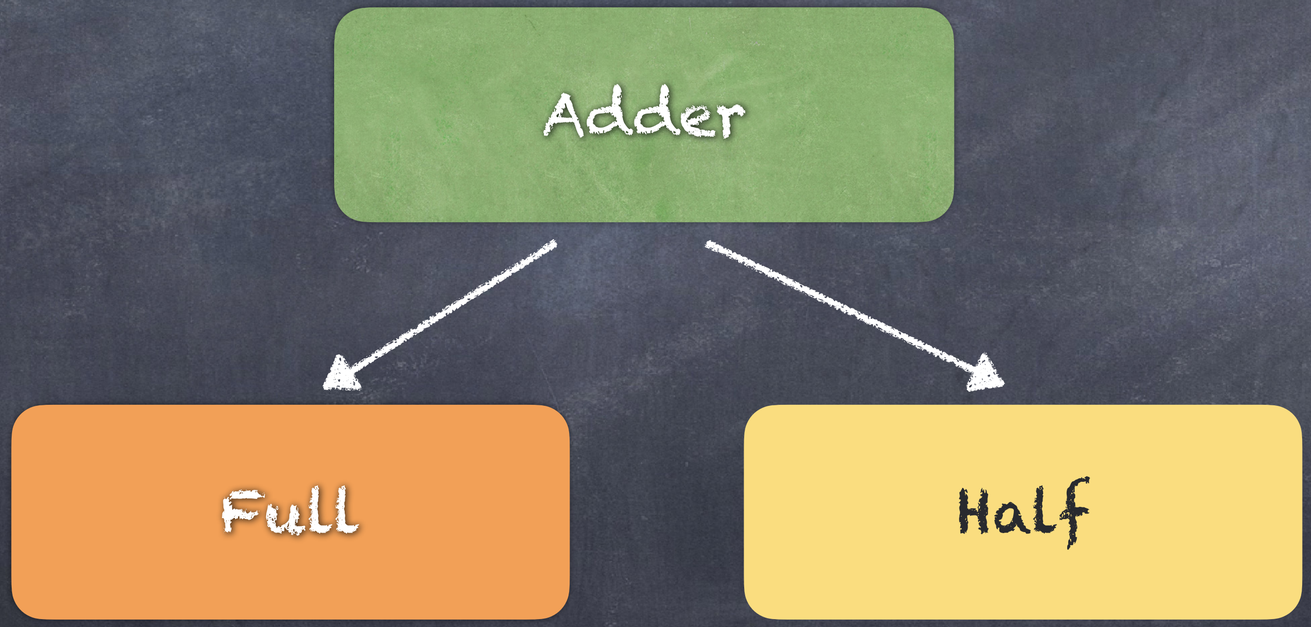

Digital Logic Circuits

Half Adder

Digital Logic Circuits

Full Adder

Digital Logic Circuits

Sequential Circuits

The basic block of any sequential circuit is a flip flop.

It remembers the information about the previous stage of the circuit.

Digital Logic Circuits

Sequential Circuits - D Flip Flop

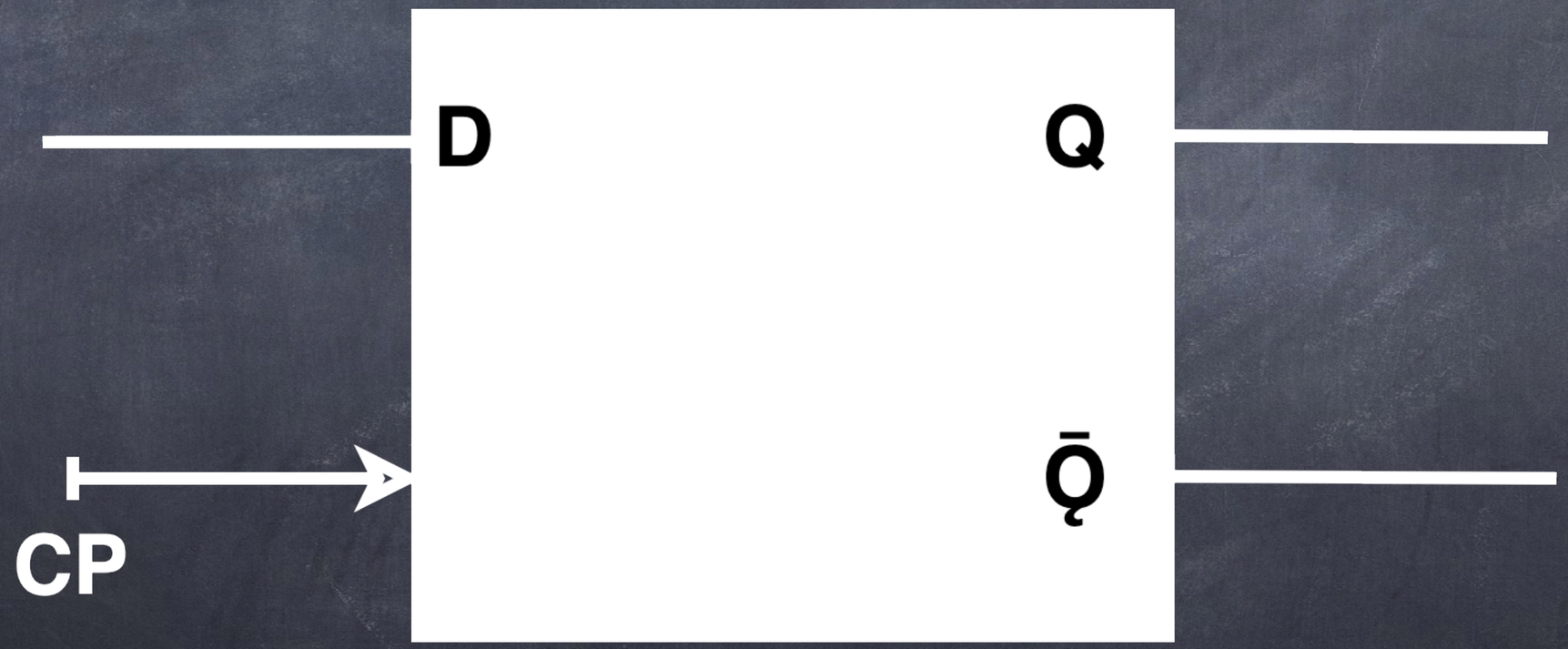

Digital Logic Circuits

Combinational/Sequential Circuits

Relevance:

1. Comparator.
2. Register.

Next...

Basic Computer Organization