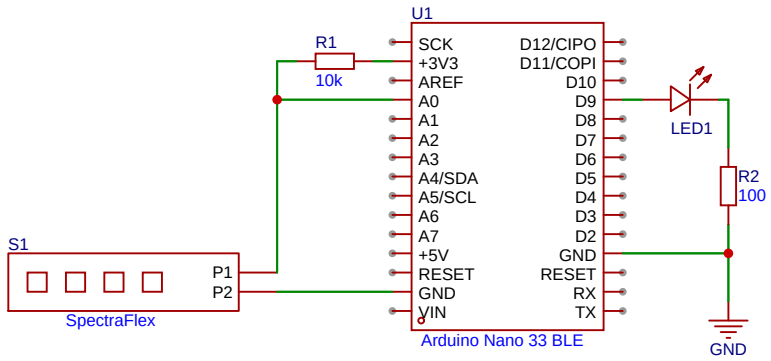

Schematic	Schematic1	Create at	2025-04-14
		Update at	2025-07-23
Board	Board1	Page	P1
Drawn		musicGlove	
Reviewed			
		Version	Size	Page 1 Total 1
EasyEDA		V1.0	A4	EasyEDA.com