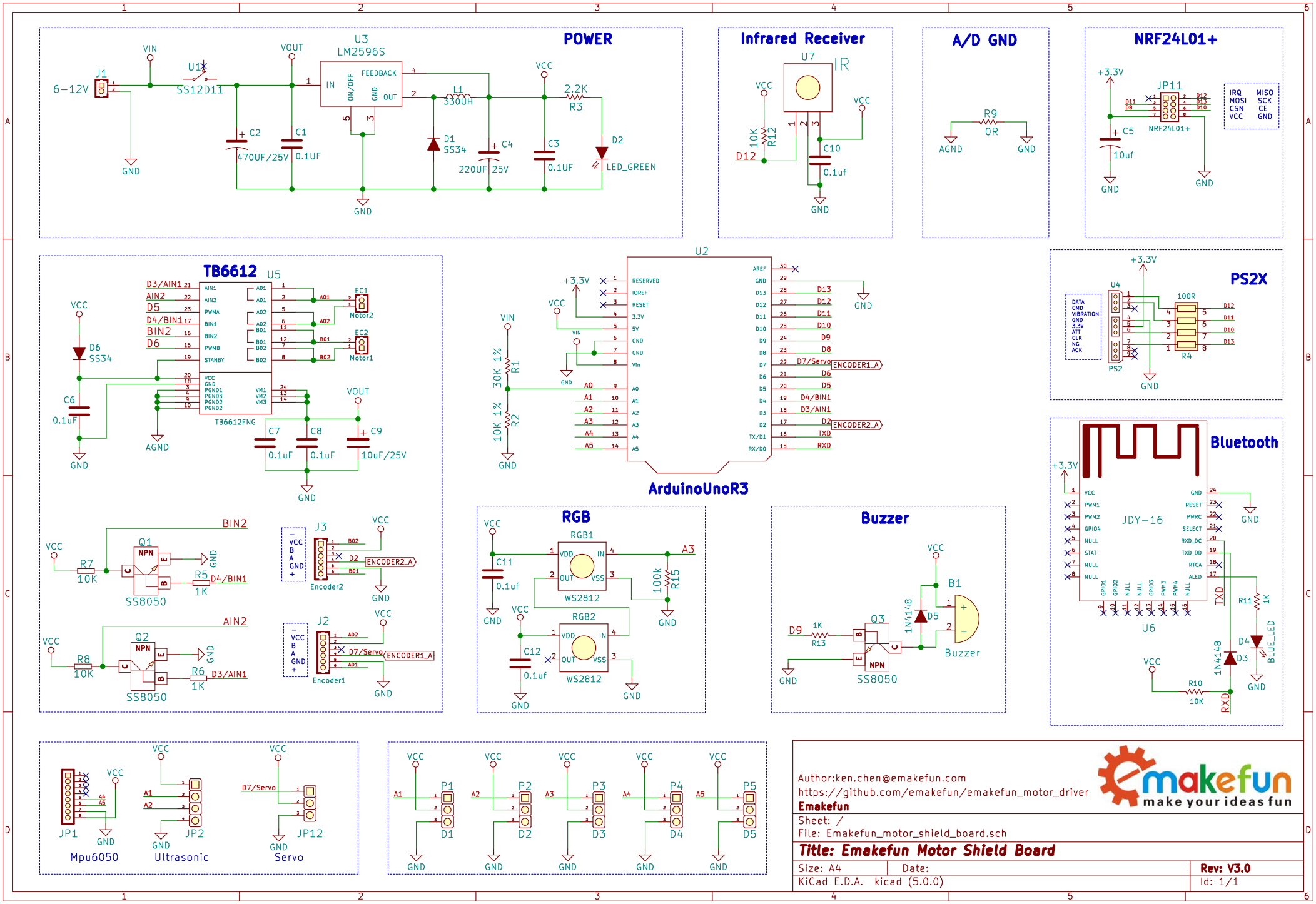
POWER
J1
6-12V
VIN
U1
SS12D11
VOUT
U3
LM2596S
FEEDBACK
IN
ON/OFF
GND
OUT
L1
330UH
VCC
2.2K
R3
C2
470UF/25V
C1
0.1UF
D1
SS34
C4
220UF 25V
C3
0.1UF
D2
LED_GREEN
Infrared Receiver
U7
IR
10K
R12
D12
C10
0.1uf
A/D GND
R9
0R
AGND
NRF24L01+
+3.3V
JP11
C5
10uf
IRQ MOSI CSN VCC
MISO SCK CE GND
TB6612
U5
D3/AIN1
AIN2
D5
D4/BIN1
BIN2
D6
AIN1
PWMA
BIN1
PWMB
STANBY
A01
B01
A02
B02
EC1
Motor2
EC2
Motor1
D6
SS34
C6
0.1uF
TB6612FNG
C7
0.1uf
C8
0.1uf
C9
10uF/25V
AGND
U2
ArduinoUnoR3
RESERVED
IOREF
RESET
3.3V
5V
GND
Vin
AREF
D13
D12
D11
D10
D9
D8
D7/Servo
D6
D5
D4/BIN1
D3/AIN1
D2
TX/D1
RX/D0
ENCODER1_A
ENCODER2_A
TXD
RXD
A0
A1
A2
A3
A4
A5
30K 1%
R1
10K 1%
R2
PS2X
U4
DATA
CMD
VIBRATION
ATT
CLK
ACK
100R
R4
PS2
Q1
SS8050
R7
10K
R5
1K
BIN2
D4/BIN1
J3
Encoder2
Q2
SS8050
R8
10K
R6
1K
AIN2
D3/AIN1
J2
Encoder1
RGB
RGB1
WS2812
RGB2
WS2812
C11
0.1uf
C12
0.1uf
100k
R15
A3
Buzzer
B1
Buzzer
D9
1K
R13
Q3
SS8050
1N4148
D5
Bluetooth
JDY-16
U6
TXD
RXD
R11
1K
R10
10K
D4
BLUE_LED
D3
1N4148
JP1
Mpu6050
JP2
Ultrasonic
JP12
Servo
D7/Servo
P1
P2
P3
P4
P5
D1
D2
D3
D4
D5
Author:ken.chen@emakefun.com
https://github.com/emakefun/emakefun_motor_driver
Emakefun
Sheet: /
File: Emakefun_motor_shield_board.sch
Title: Emakefun Motor Shield Board
Size: A4
Date:
Rev: V3.0
KiCad E.D.A. kicad (5.0.0)
Id: 1/1
make your ideas fun