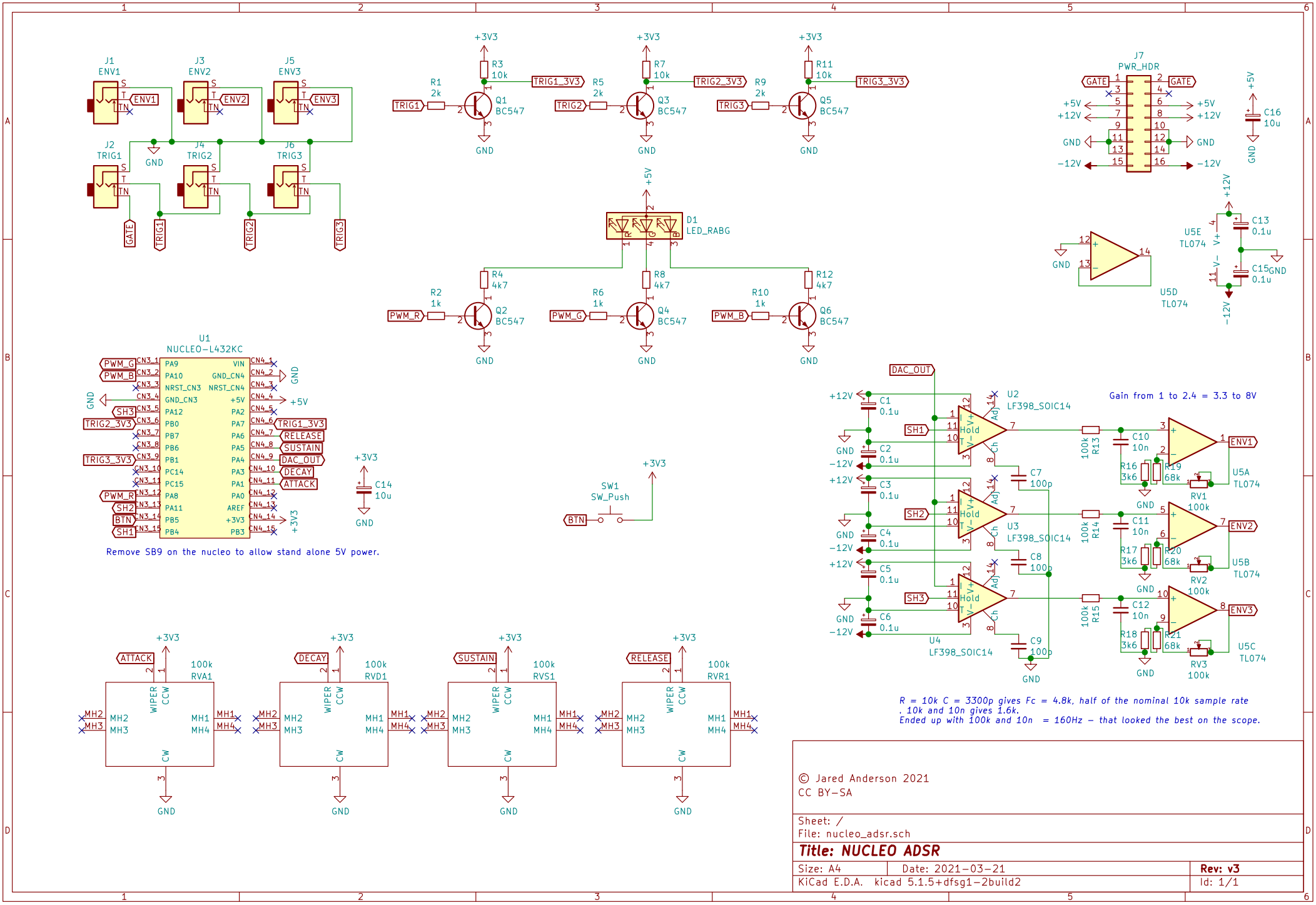

© Jared Anderson 2021
CC BY-SA

Sheet: /
File: nucleo_adsr.sch

Title: NUCLEO ADSR

Size: A4	Date: 2021-03-21	Rev: v3
KiCad E.D.A. kicad 5.1.5+dfsg1-2build2		Id: 1/1