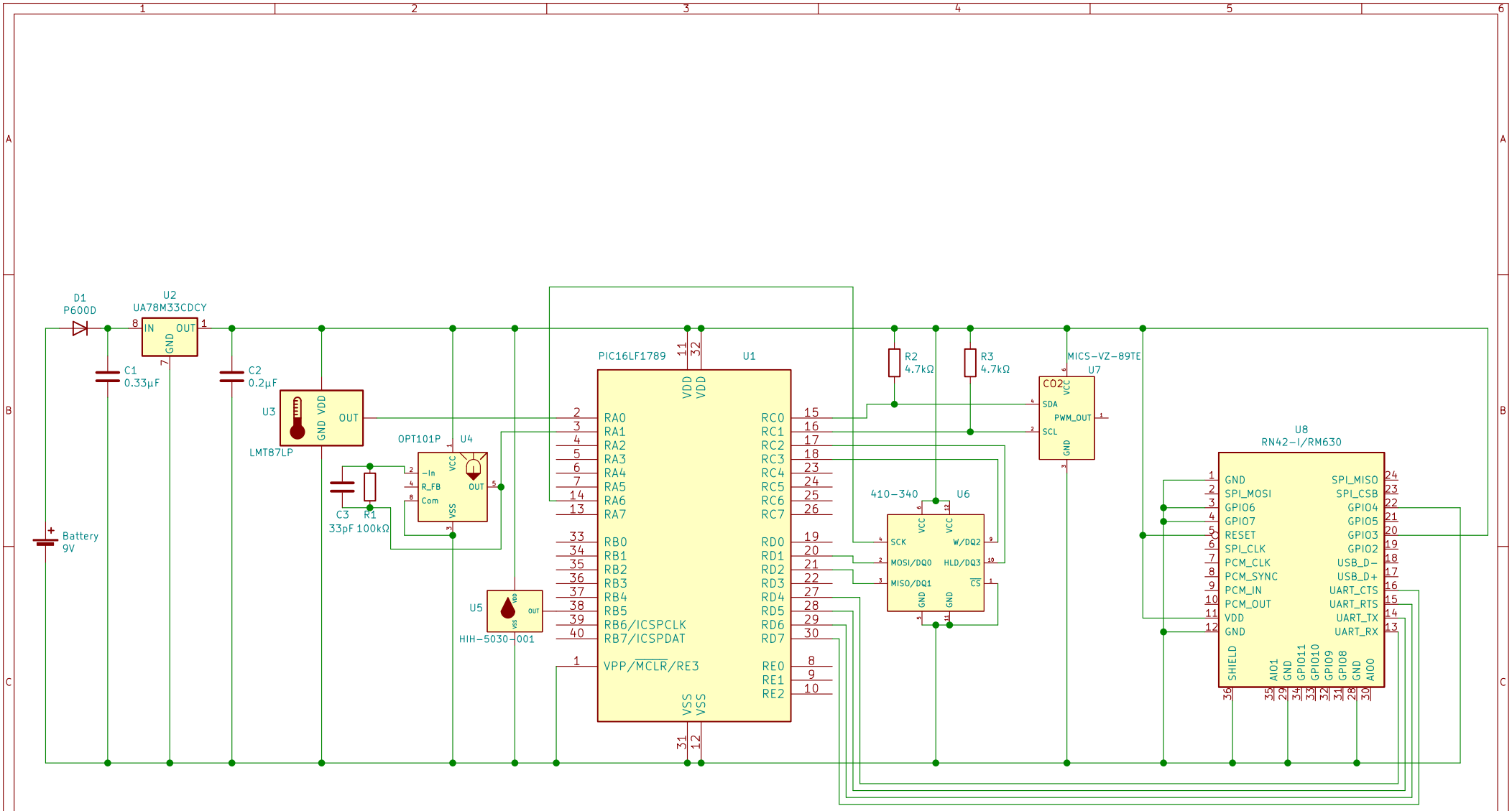


Sheet: /
File: Projet_schematics.sch

**Title:**

| Size: A4 | Date: | Rev: |
|---|---|---|
| KiCad E.D.A. eeschema 5.1.8-db983349188ubuntu20.04.1 | | Id: 1/1 |