FED. ROAD DIV. NO.	STATE	FED. AID PROJ. NO.	FISCAL YEAR	SHEET NO.	TOTAL SHEETS
10	WASH.	I-82-2(78)37		87	89

79W051

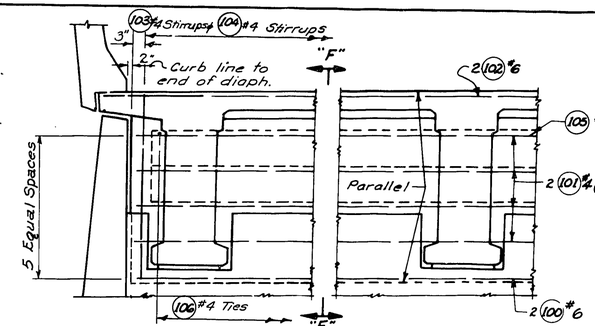

TYPICAL END DIAPHRAGM AT END PIERS

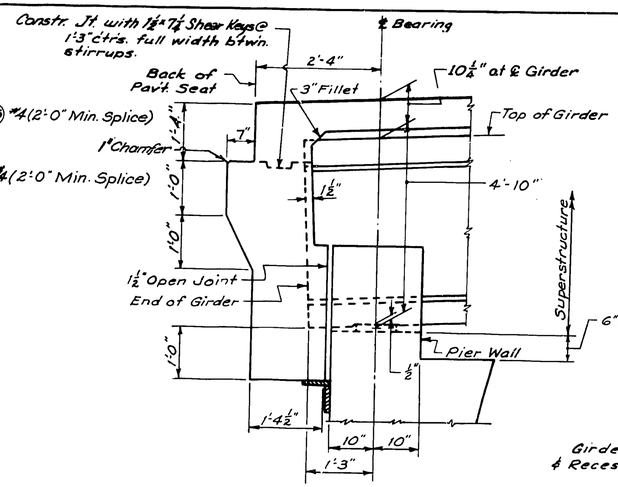

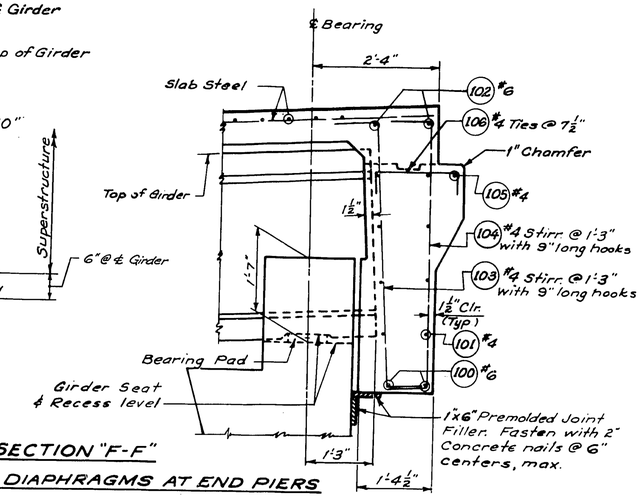

SECTION "F-F"

SECTIONS THRU END DIAPHRAGMS AT END PIERS

All longitudinal dimensions are normal to skew.

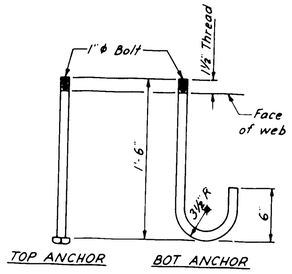

ANCHOR DETAILS

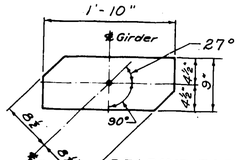

BEARING PAD

Laminated Elastomeric Brg. Pad 1½" Thick - 2 Shims.
Durometer Hardness = 60

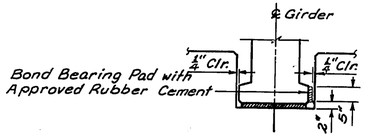

GIRDER STOP BEARING PAD

Laminated Elastomeric Bearing Pad 1" thick - 1 Shim.
Durometer Hardness = 60 ~ Size: 5" x 1'-0"
See "PIERS 1 & 2" Sheet for location.

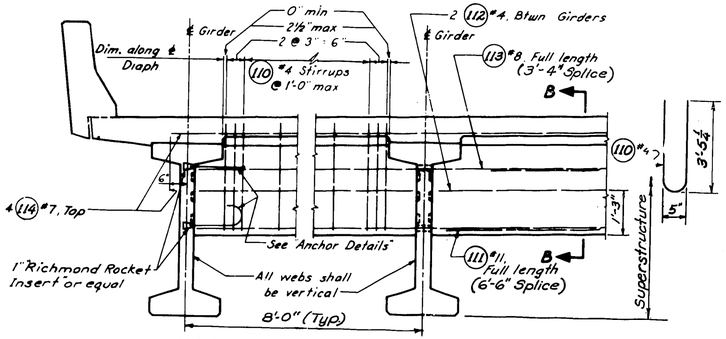

TYPICAL INTERMEDIATE DIAPHRAGM

NOTE:

Girders shall be held rigidly in place when diaphragms are poured. Reinforcing bars shall be threaded through holes in girders prior to placing of exterior girders.

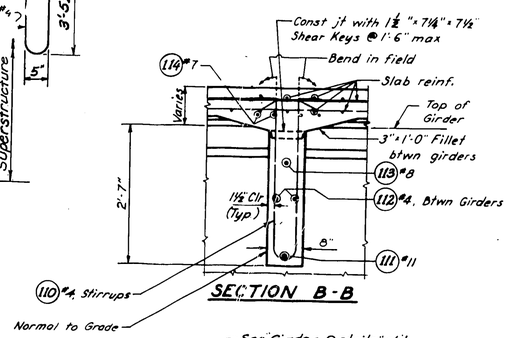

SECTION B-B

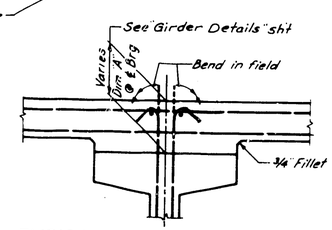

TYPICAL SECTION THRU GIRDER SHOWING METHOD OF ADJUSTING RDWY. ELEVS. FOR VERT. CURVES, CAMBER OR SUPERELEVATION.

Bridge Design Engineer	Jerry Threadgill
Bridge Design Engr.	3-77
Designed	Lockie, Nissen, Ellis
Detailed	April 1978
Design Checker	D. M. Murphy
Checked	April 1978
Checker (A.T.H.)	
Traced	
Quantities Curve	
Quantities Checker	

Date	By	

Date	
Traced	
Checked	
Loc. Engr.	
Dist. Engr.	

SR 82 Job No. 1538 Sheet 8 of 10

SR 82 MP 38.94 TO MP 41.52

UNION GAP TO SUNNYSIDE DAM

YAKIMA COUNTY

GANGLE ROAD OVERCROSSINGS

DIAPHRAGMS

WASHINGTON STATE DEPARTMENT OF TRANSPORTATION
OLYMPIA, WASHINGTON

W. A. BULLEY SECRETARY

BRIDGE ENGINEER C. E. Lloyd APPROVED May 4, 1979

CONTRACT NUMBER 1631 SHEET 87 OF 89 SHEETS

SR 82/72

126/143