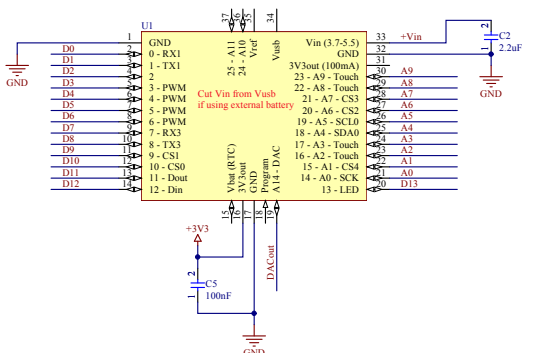

Teensy 3.1/3.2/LC

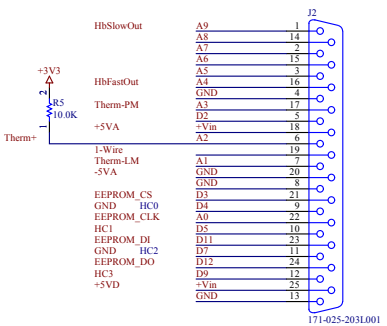

DB25F Meter Interface

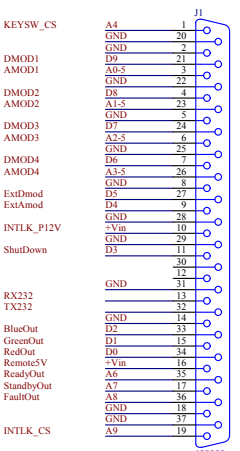

Gemini DB37F Interface

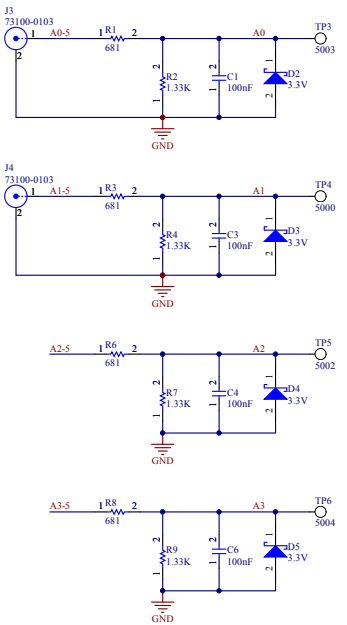

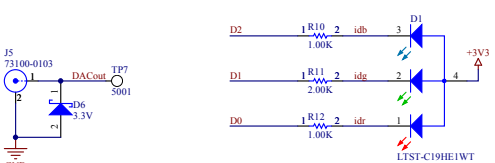

Debug LED

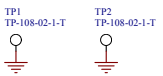

Variant Name: Variant name not interpreted	COHERENT — Coherent, Inc. Laser Systems & Measurement (LSM) 27650 SW 95th Avenue Wilsonville, OR 97070 USA
Drawn: *	Teensy Tester — TeensyTester.SchDoc
Approved By: *	Size: B · FCSM No. · DWG No. Heisneberg Simulator · Rev: v1
Engineer: Rick Farmer	File: J:\Projects\Meter2013\SignalGen\TeensyTester\TeensyTester.SchDoc · Sheet: 1 of 1
Last Modified: 3/19/2018	

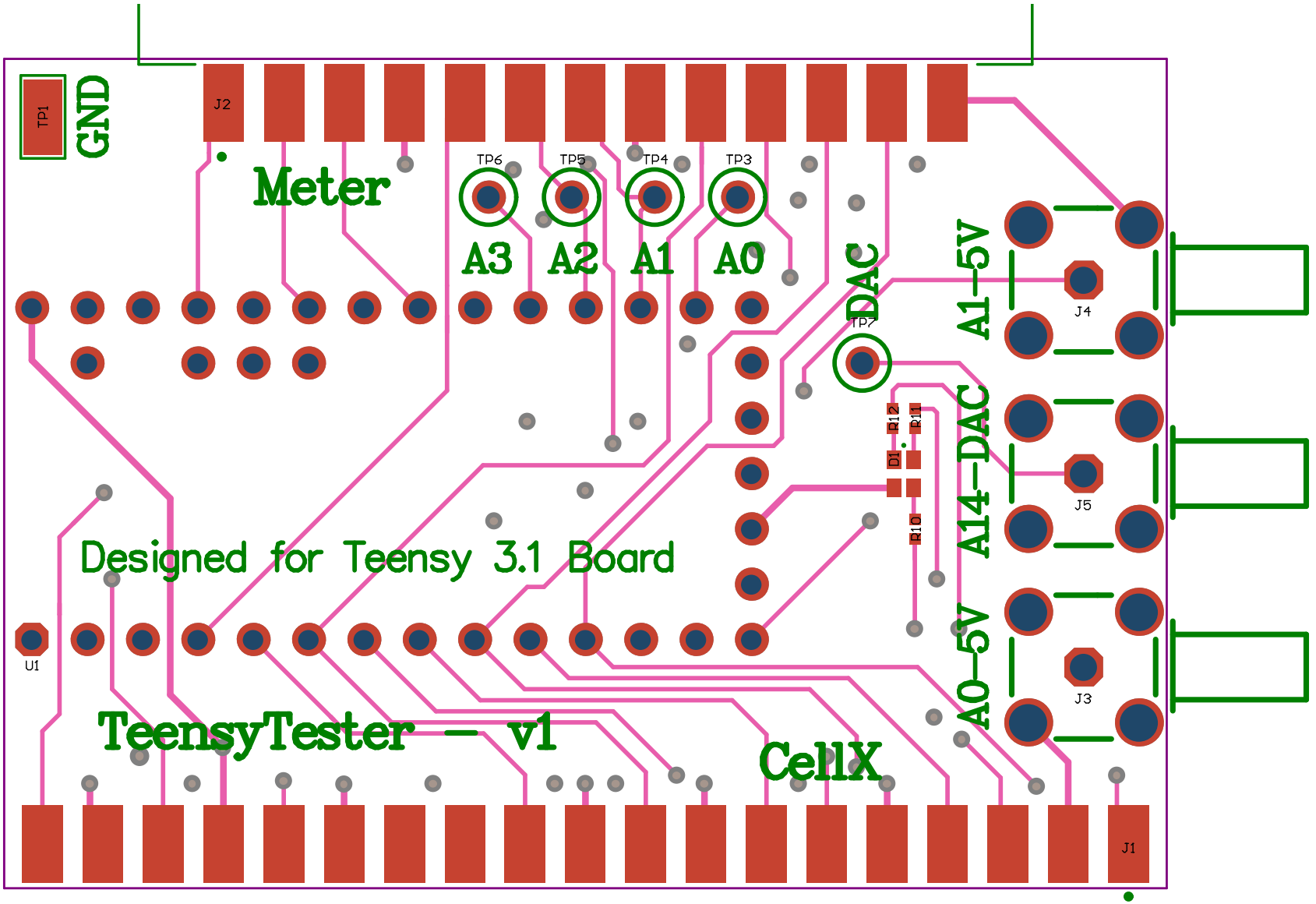
TP1
GND
J2
Meter
TP6
TP5
TP4
TP3
A3
A2
A1
A0
DAC
TP7
A1-5V
J4
A14-DAC
J5
A0-5V
J3
R12
R11
D1
R10
Designed for Teensy 3.1 Board
U1
TeensyTester - v1
CellX
J1

GND
TP2
R1
R2
C1
D2
D3
R6
R7
C4
D5
C2
C3
R4
R3
D6
D1
R5
C6
R9
R8
C5
COHERENT®