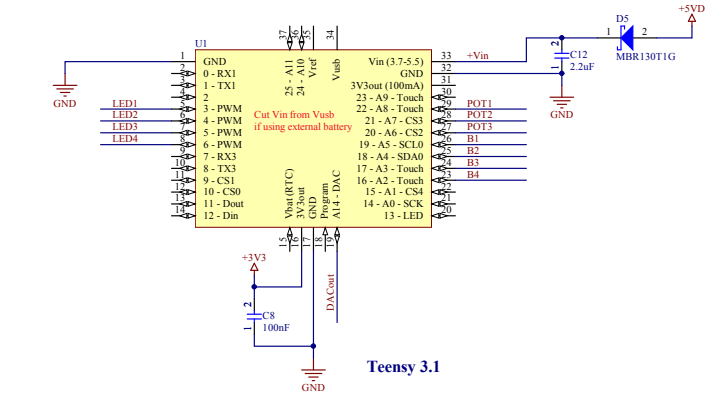

Teensy 3.1

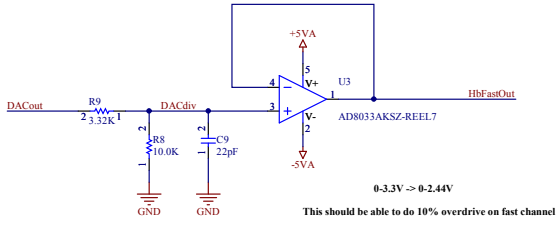

Analog Output

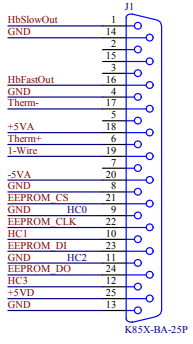

Meter Interface

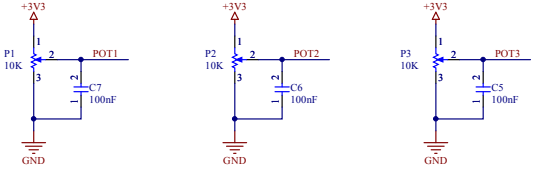

Analog User Input

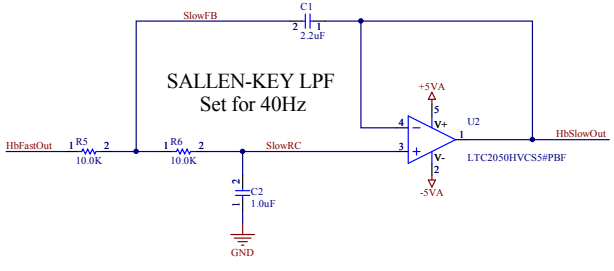

Legacy Slow Channel

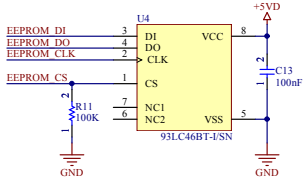

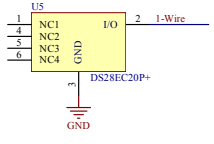

EEPROMs

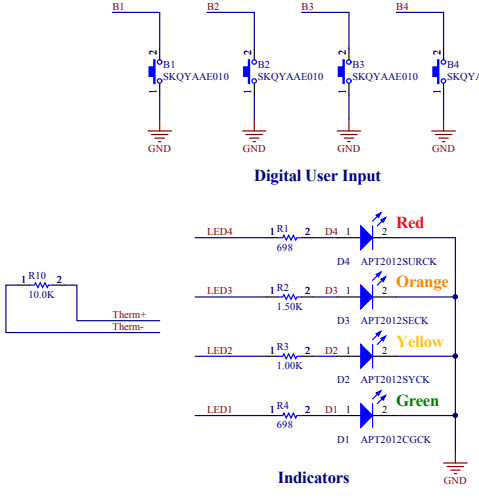

Digital User Input

Indicators

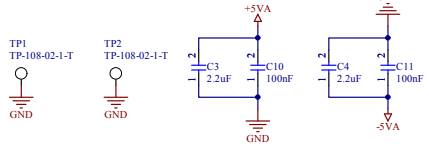

Variant Name:	Variant name not interpreted
Drawn:	*
Approved By:	*
Engineer:	Rick Farmer
Last Modified:	5/19/2015

COHERENT®

Coherent, Inc.
Laser Systems & Measurement (LSM)
27650 SW 95th Avenue
Wilsonville, OR 97070 USA

DB25Teensy
DB25Teensy.SchDoc

Size:	FCSM No.	DWG No.	Rev:
B		Heisneberg Simulator	v1

File: J:\Projects\Meter2013\SignalGen\DB25Teensy\DB25Teensy.SchDoc

Sheet: 1 of 1

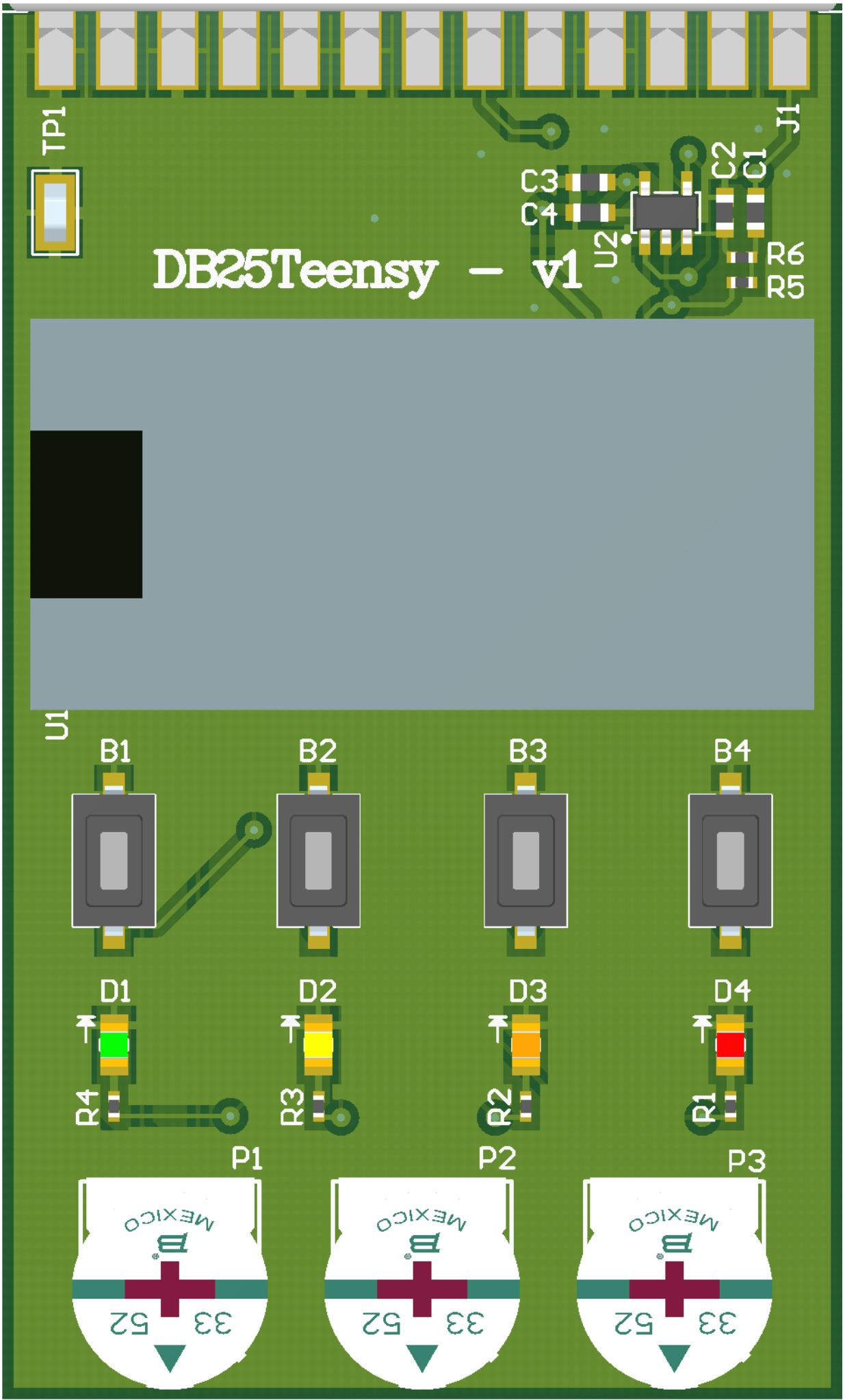
TP1
J1
C3
C4
C2
C1
U2
R6
R5
DB25Teensy – v1
U1
B1
B2
B3
B4
D1
D2
D3
D4
R4
R3
R2
R1
P1
P2
P3
MEXICO
33
52