SI Units

Quantity	Quantity symbol	Unit	Unit symbol
Capacitance	C	Farad	F
Charge	Q	Coulomb	C
Current	I	Ampere	A
Electromotive force	E	Volt	V
Frequency	f	Hertz	Hz
Inductance (self)	L	Henry	H
Period	T	Second	s
Potential difference	V	Volt	V
Power	P	Watt	W
Resistance	R	Ohm	Ω
Temperature	T	Kelvin	K
Time	t	Second	s

Common Prefixes

Prefix	Name	Meaning (multiply by)
T	tera	10^{12}
G	giga	10^{9}
M	mega	10^{6}
k	kilo	10^{3}
m	milli	10^{-3}
μ	micro	10^{-6}
n	nano	10^{-9}
p	pico	10^{-12}

Resistors, Capacitors and Inductors

- **Resistors** provide resistance
  - they oppose the flow of electricity
  - measured in Ohms (Ω)
- **Capacitors** provide capacitance
  - they store energy in an electric field
  - measured in Farads (F)
- **Inductors** provide inductance
  - they store energy in a magnetic field
  - measured in Henry (H)

Circuit Symbols

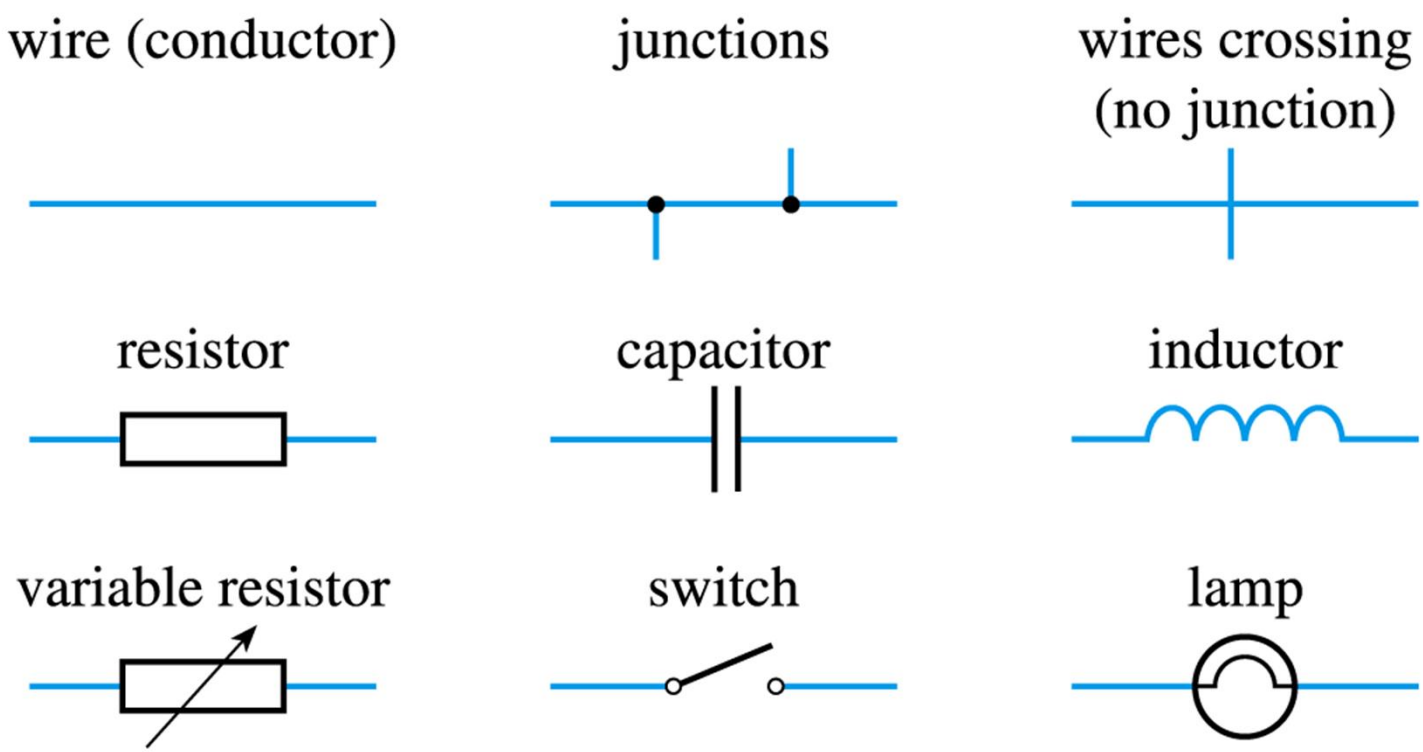

e.m.f. (e.g. battery)

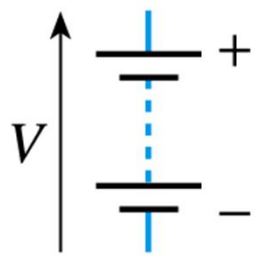

e.m.f. (e.g. battery)

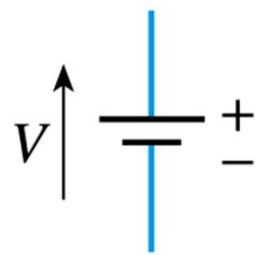

voltage source

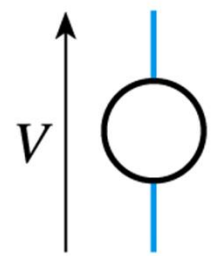

ground (zero volts)

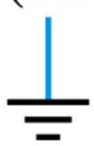

voltmeter

ammeter