Field Effect Transistor (FET)

FET: N-Channel

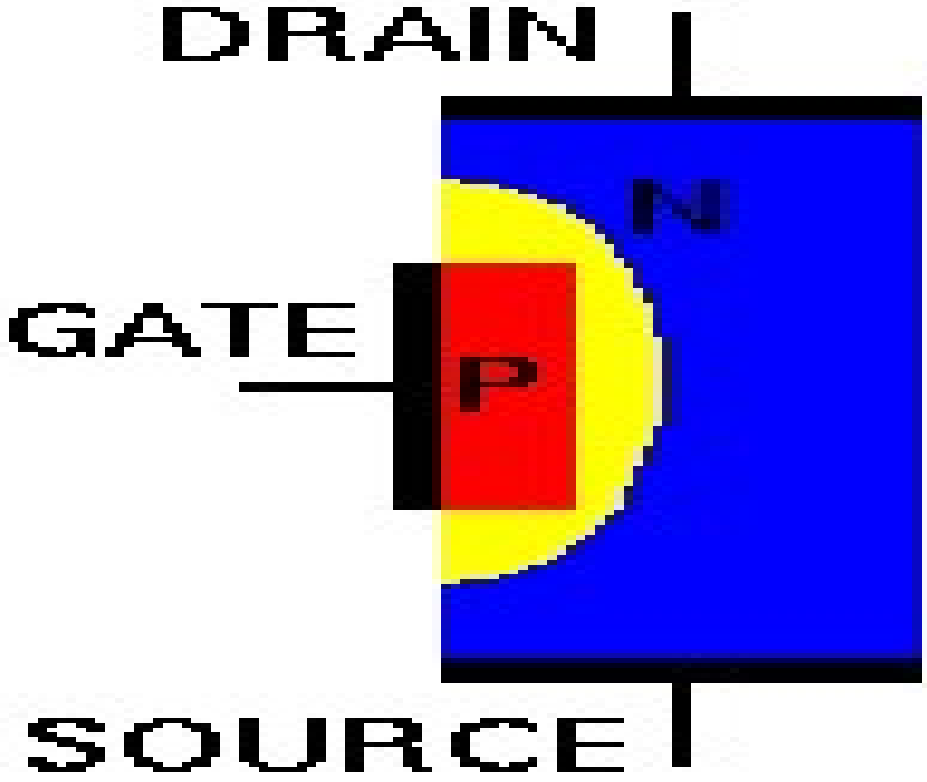

FET: P-Channel

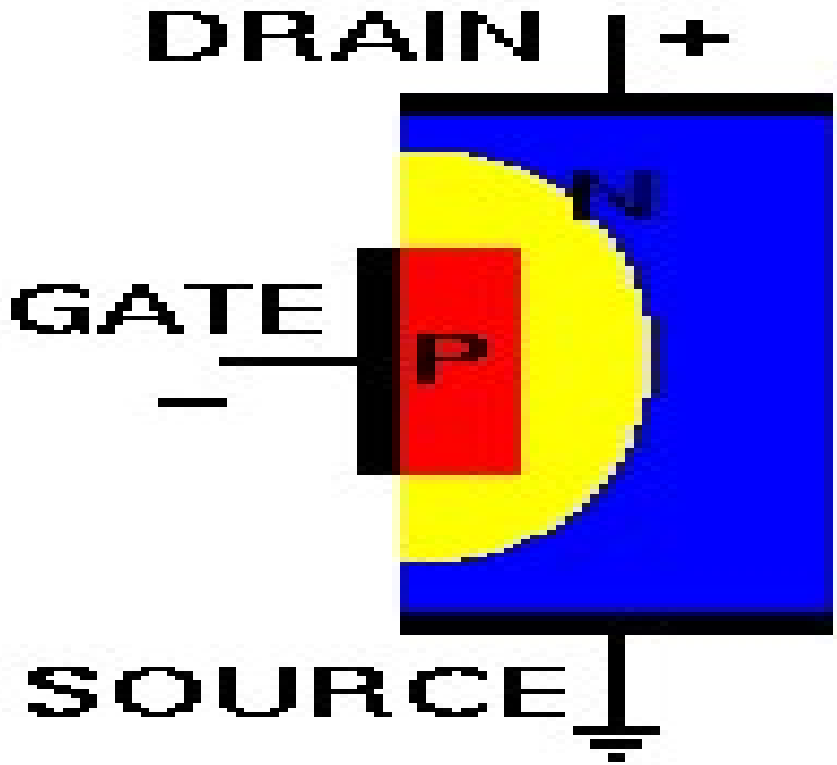
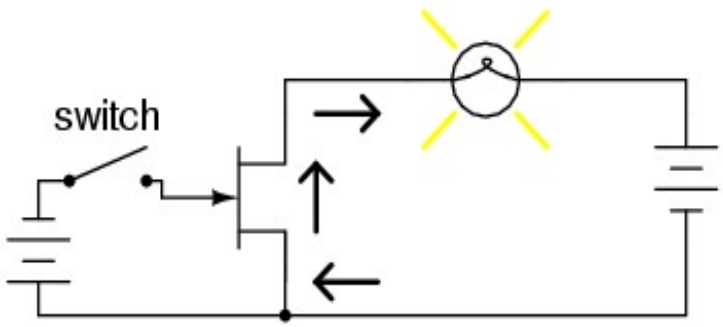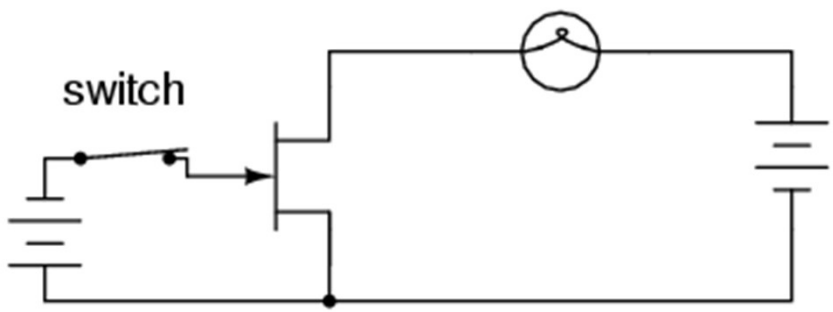
FET: As a switch