Semiconductor Cross-section of IGBT

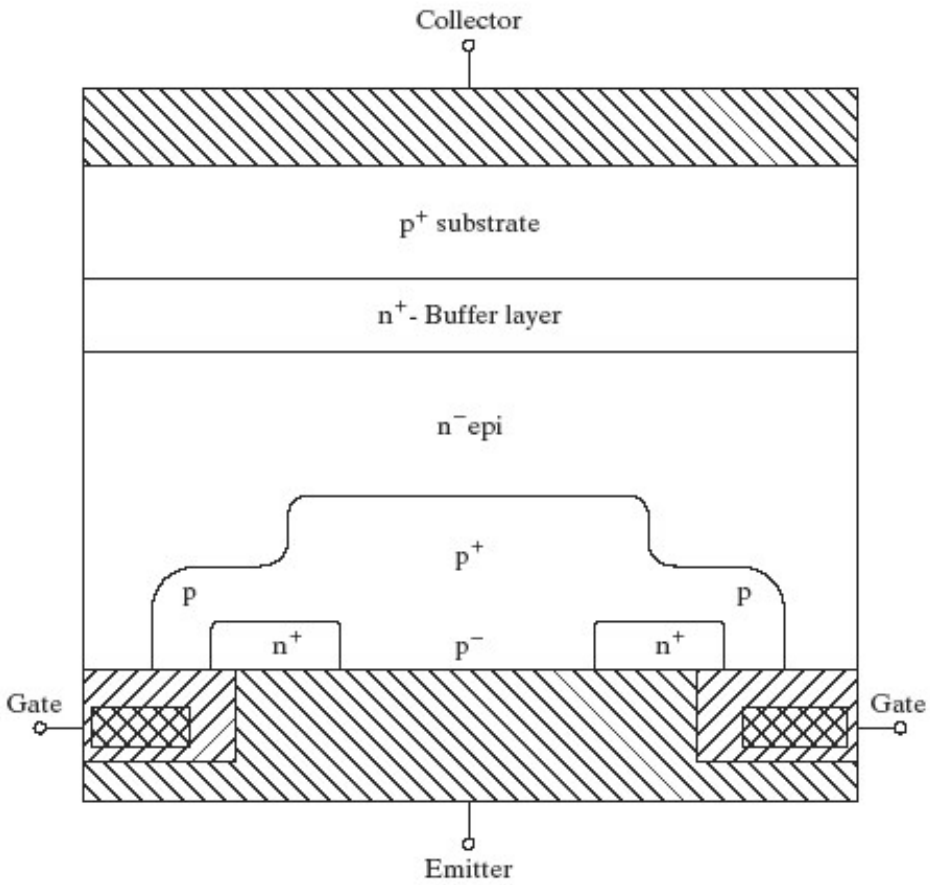

(a) Cross section

IGBT

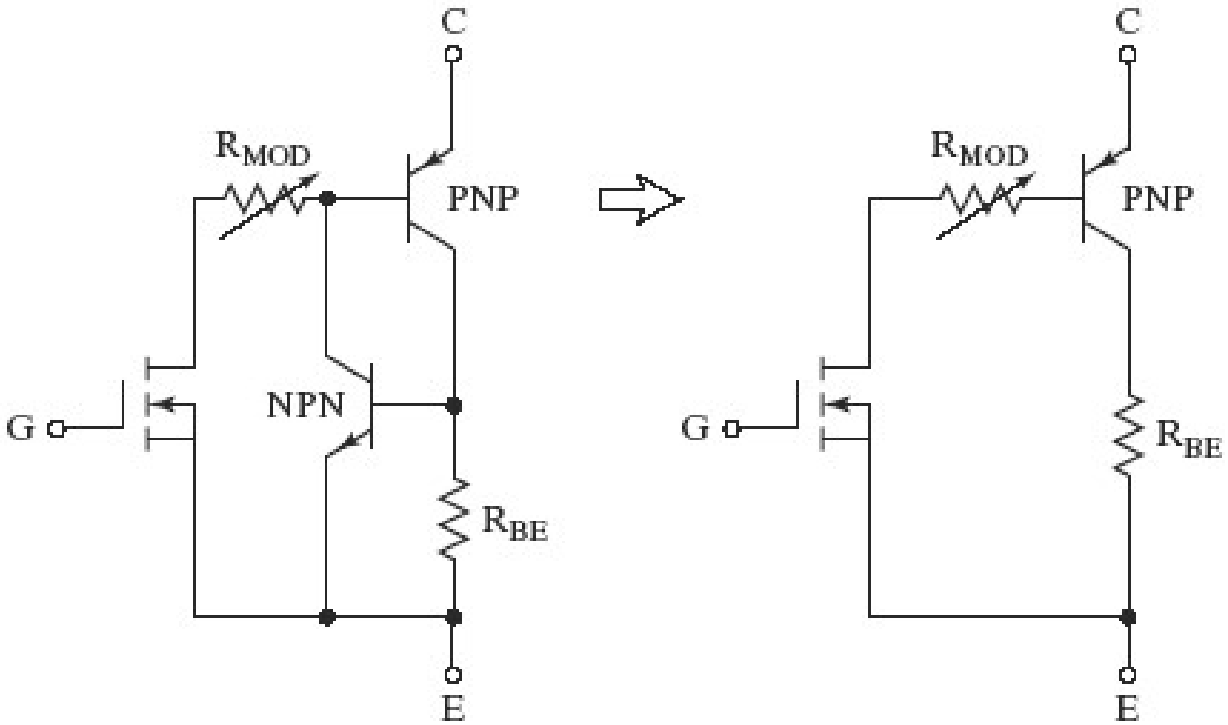

(b) Equivalent circuit

(c) Simplified circuit

Advantages of IGBT

- Combines the advantages of BJT & MOSFET
- High input impedance like MOSFET
- Voltage controlled device like MOSFET
- Simple gate drive, Lower switching loss
- Low on state conduction power loss like BJT
- Higher current capability & higher switching speed than a BJT. (Switching speed lower than MOSFET)

Applications of IGBT

- ac and dc motor controls.
- General purpose inverters.
- Uninterrupted Power Supply (UPS).
- Welding Equipments.
- Numerical control, Cutting tools.
- Robotics & Induction heating.