Thyristor

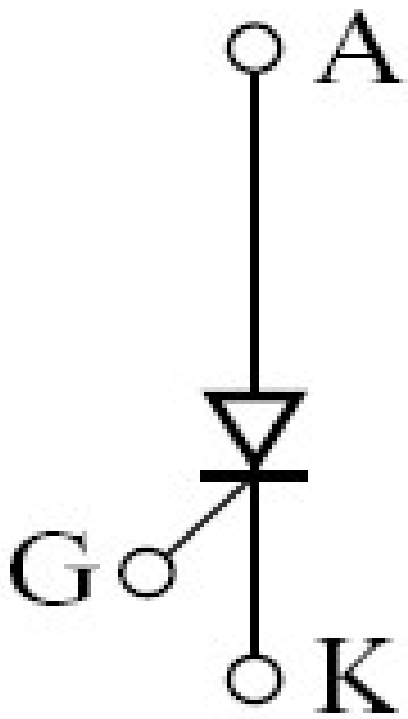

Symbol of Thyristor

Thyristors

- Most important type of power semiconductor device.
- Have the highest power handling capability.they have a rating of 5000V / 6000A with switching frequencies ranging from 1KHz to 20KHz.

- Is inherently a slow switching device compared to BJT or MOSFET.
- Used as a latching switch that can be turned on by the control terminal but cannot be turned off by the gate.

Structure

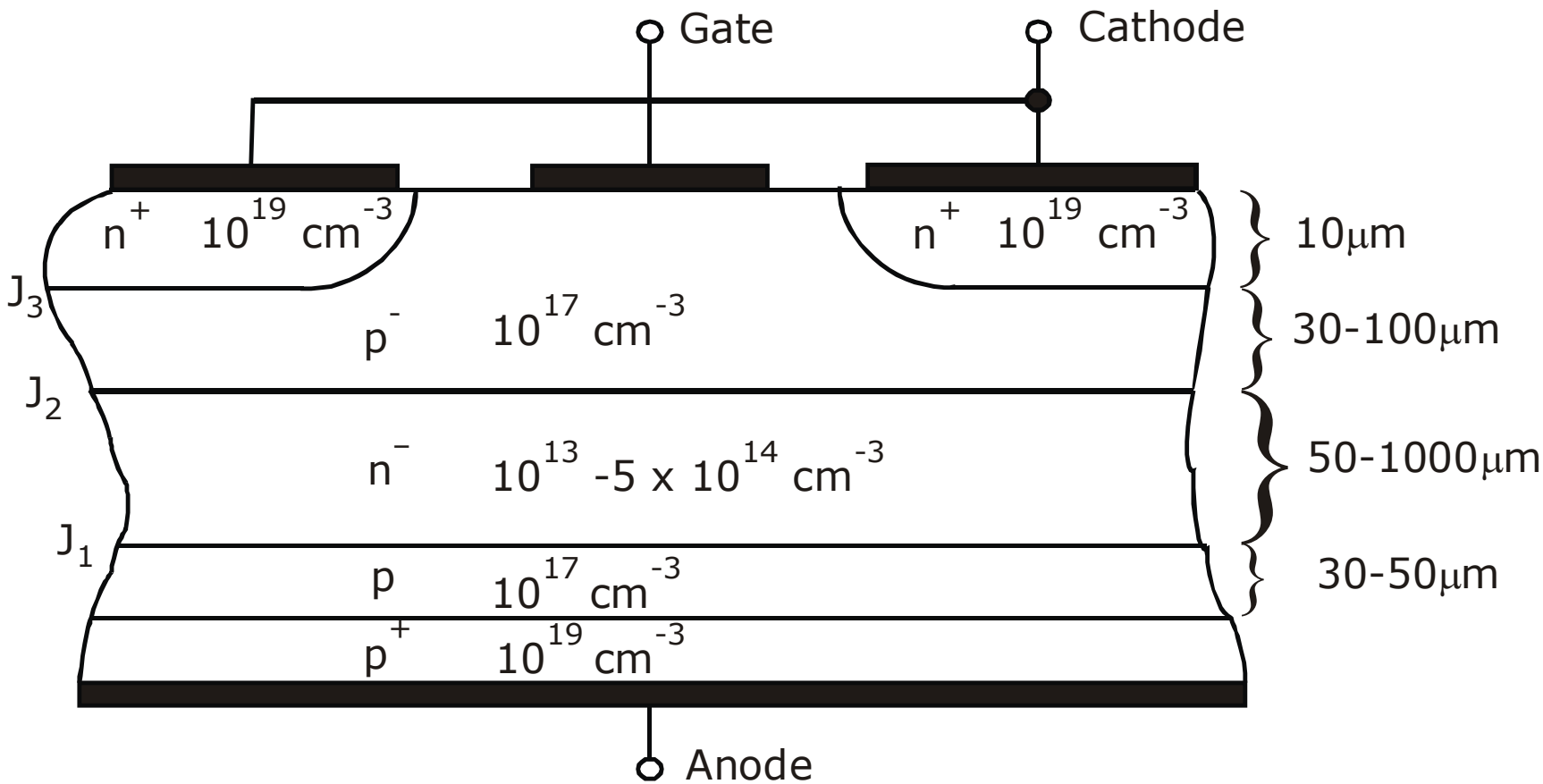
Gate
Cathode
n+ 10^19 cm^-3
n+ 10^19 cm^-3
10μm
J3
p- 10^17 cm^-3
30-100μm
J2
n− 10^13 -5 x 10^14 cm^-3
50-1000μm
J1
p 10^17 cm^-3
30-50μm
p+ 10^19 cm^-3
Anode

Device Operation

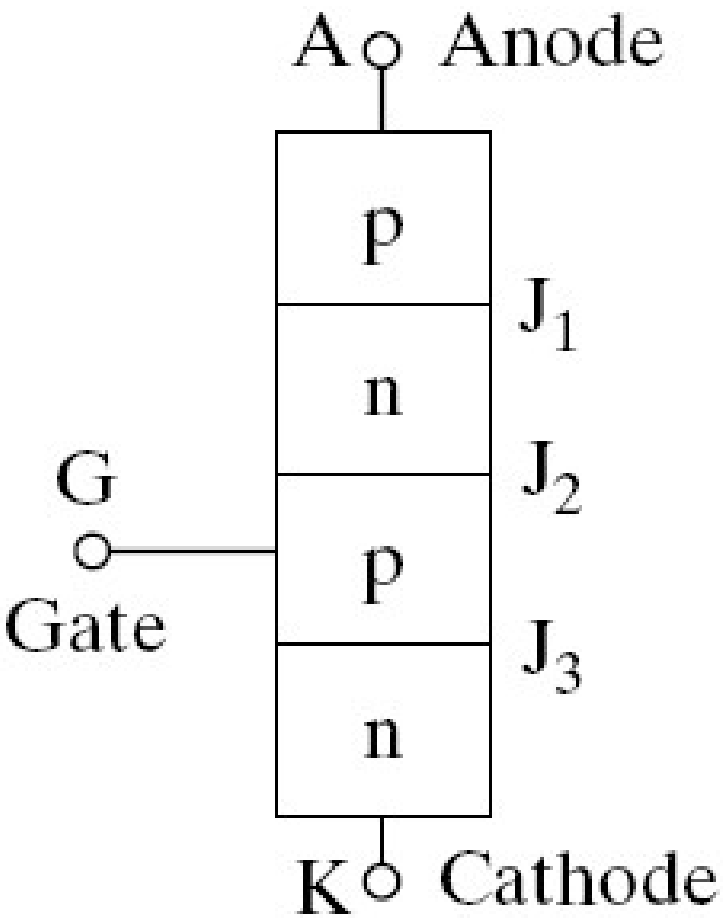

Simplified model of a thyristor

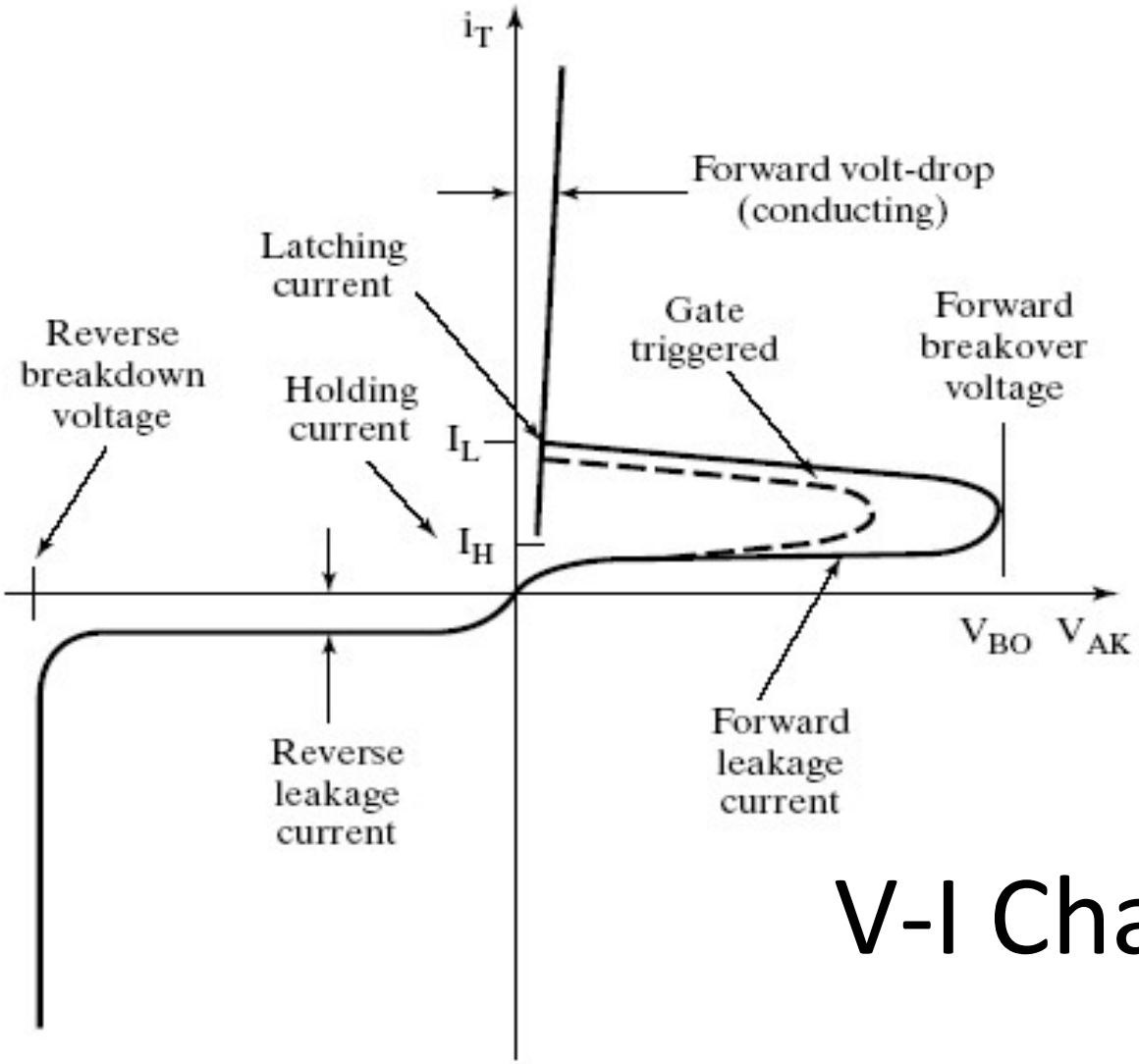

V-I Characteristics

Effects of gate current

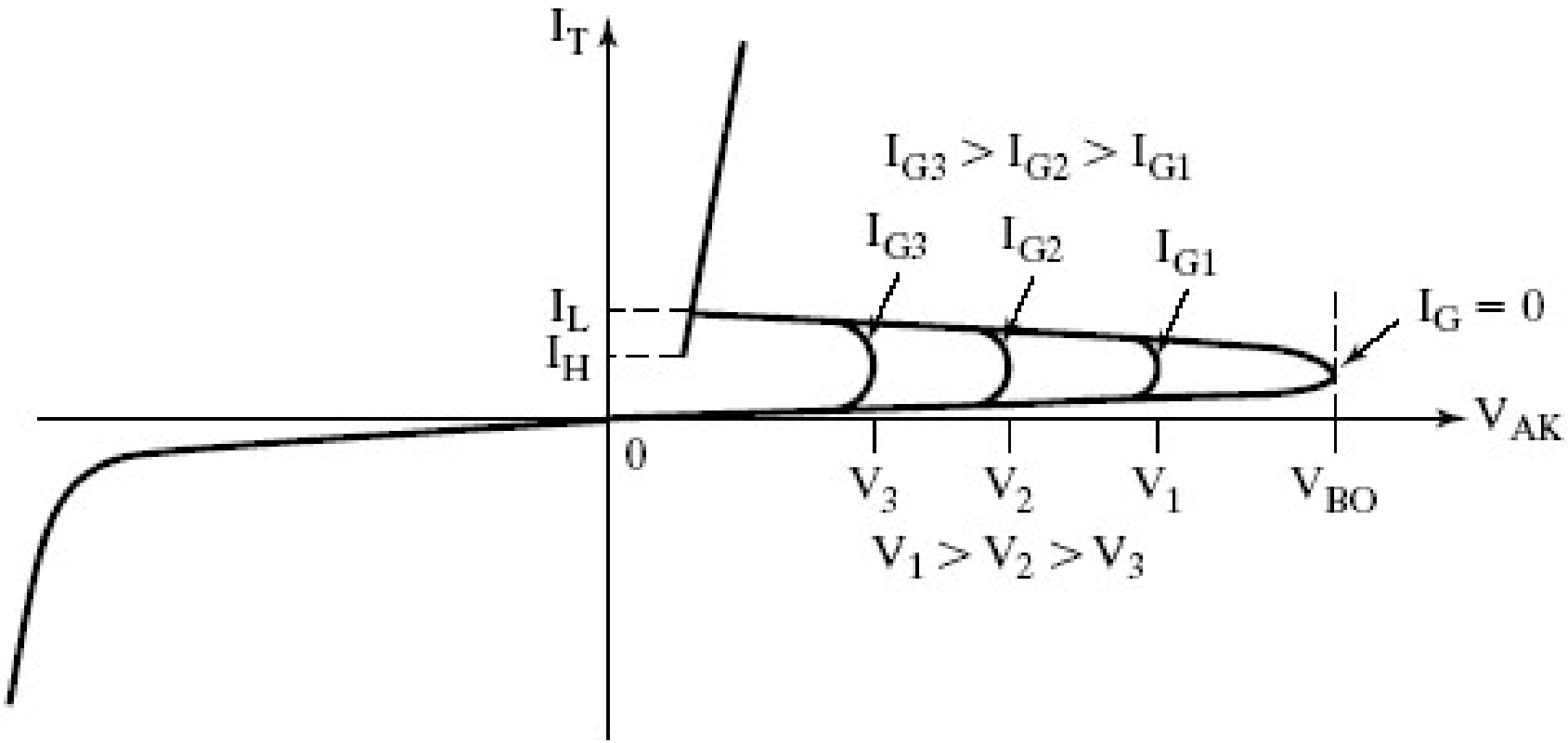

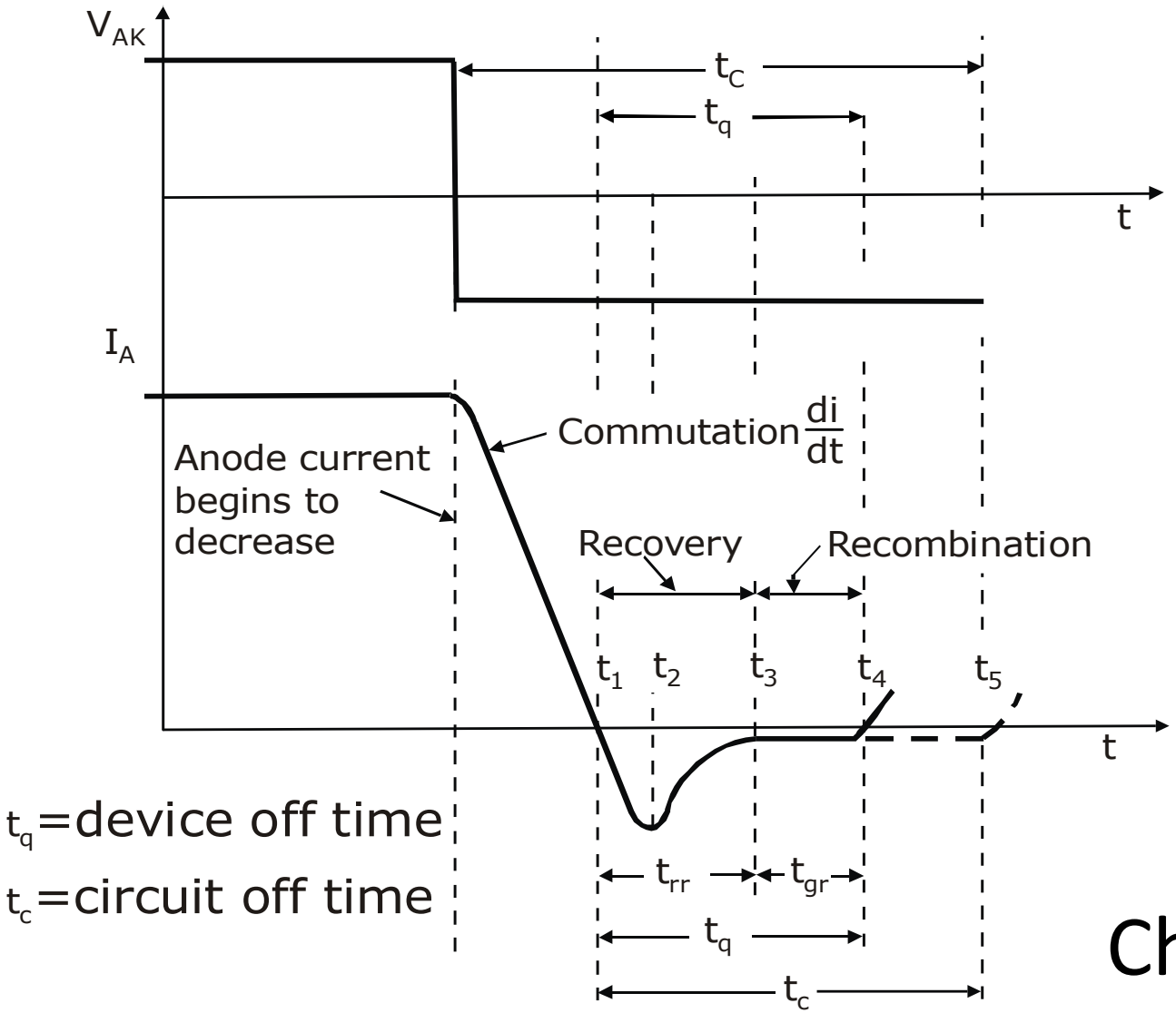

t_q=device off time

t_c=circuit off time

Turn-off Characteristics

Thyristor Conduction

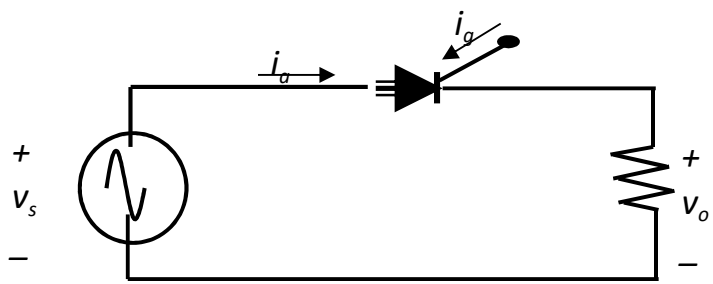

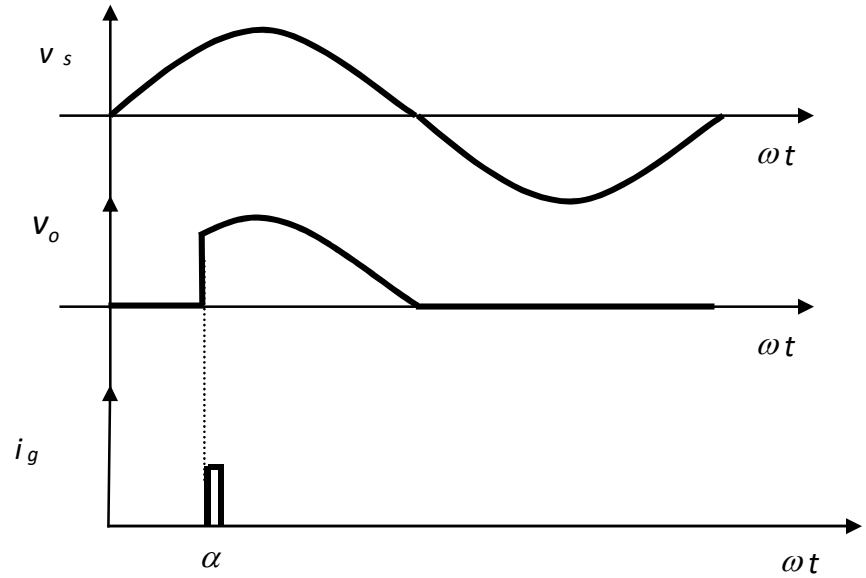

Methods of Thyristor Turn-on

- Thermal Turn-on.
- High Voltage.
- Gate Current.
- dv/dt.

Thyristor Types

- Phase-control Thyristors (SCR’s).
- Fast-switching Thyristors (SCR’s).
- Gate-turn-off Thyristors (GTOs).
- Bidirectional triode Thyristors (TRIACs).

Phase Control Thyristor

- These are converter thyristors.
- The turn-off time t_q is in the order of 50 to 100μsec.
- Used for low switching frequency.
- Commutation is natural commutation
- On state voltage drop is 1.15V for a 600V device.

Fast Switching Thyristors

- Also called inverter thyristors.
- Used for high speed switching applications.
- Turn-off time t_q in the range of 5 to 50μsec.
- On-state voltage drop of typically 1.7V for 2200A, 1800V thyristor.
- High dv/dt and high di/dt rating.