DATE:

EX. NO:10 **STEP - DOWN CHOPPER USING MOSFET**

AIM:

To find the duty cycle and output voltage and compare with theoretical values and plot the characteristics.

APPARATUS REQUIRED:

S.NO	APPARATUS	RANGE	QUANTITY
1	Step up & Step down MOSFET based chopper kit		1
2	CRO	20 MHZ	1
3	Patch chords		15

THEORY:

A step down chopper or buck converter is used as a voltage regulator where the output voltage is less than the input voltage. The output voltage is varied by varying the duty cycle ratio using PWM (Pulse width Modulation)

FORMULA:

$$\boldsymbol{V_o = \alpha V_s}$$

$$\boldsymbol{\alpha = \frac{T_{on}}{T}}$$

$$\boldsymbol{T = T_{on} + T_{off}}$$

Where V_S is Supply Voltage

V_O is the output voltage

α is the Duty Cycle

T is the Total Time period

Ton- ON Period

Toff- Off Period

TABULATION:

Vs=_____ V

S.NO	T_{ON}(ms)	T_{OFF}(ms)	T(ms)	Duty Cycle Ratio α	Output Voltage	
					Theoretical	Practical

PROCEDURE:

1. Initially keep all the switches in the OFF position
2. Initially keep duty cycle POT in minimum position
3. Connect banana connector 24V DC source to 24V DC imput.
4. Connect the driver pulse output to MOSFET input
5. Switch on the main supply
6. Check the test point waveforms with respect to ground.
7. Vary the duty cycle plot and tabulate the Ton, Toff & output voltage
8. Trace the waveforms of Vo
9. Draw the graph for Vo , Vs Duty cycle, α

RESULT:

The duty cycle and output voltage are found and compared with the theoretical values and graphs are drawn.

CIRCUIT DIAGRAM

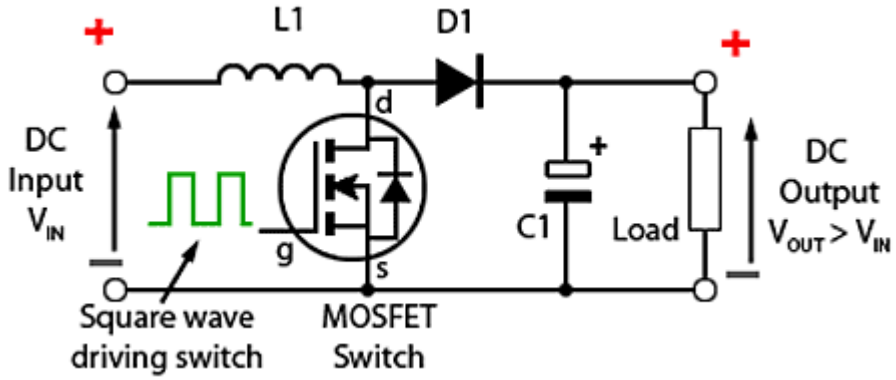

MODEL GRAPH
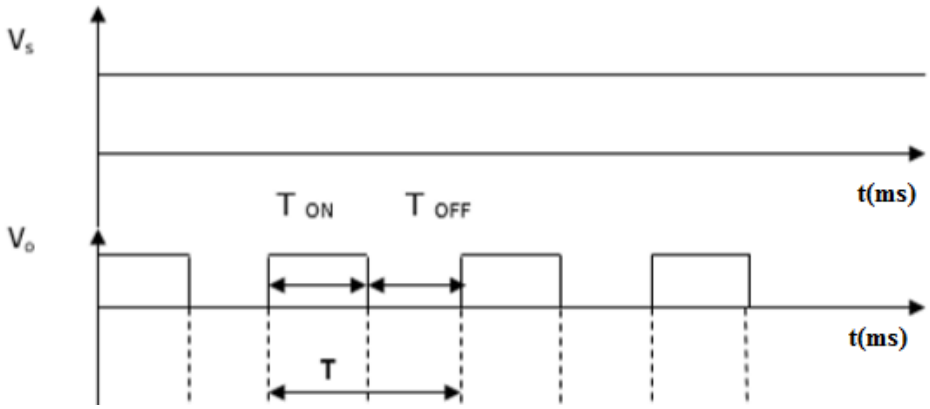
OUTPUT WAVEFORMS