Date:

Ex.No.18 SINGLE PHASE AC VOLTAGE CONTROLLER

AIM:

To plot the output waveform of single phase AC voltage controller with R and RL load using anti parallel connections of SCR.

APPARATUS REQUIRED:

S.No.	APPARATUS	RANGE	TYPE	QUANTITY
1	AC voltage control trainer kit			
2	Resistor	100 ohm/1W 1Kohm		1
4	DIAC	DB3		1
5	TRIAC	BT 136		1
6	CRO			1
7	Patch Chords			15

THEORY:

By connecting a reverse parallel pair of thyristors or Triac between AC supply and load, the applied Load can be controlled. This type of power controller is known as AC voltage controller or AC regulators. Therefore AC voltage regulators converts fixed mains voltage directly to variable alternating voltage without change in the frequency. The important applications where AC voltage controllers are widely used are: speed control of induction motors, domestic and industrial heating, light controllers, ON load transformer tap changing, static reactive power compensators etc. Since the AC regulators are phase controlled converters, thyristors and Triacs are line commutated and as such no complex commutation circuitry is required in these controllers.

TABULATION

S.No	Vo (Volts)	Vin (Volts)	Ton (ms)	Toff (ms)	Firing Angle α (Degree)

MODEL GRAPH

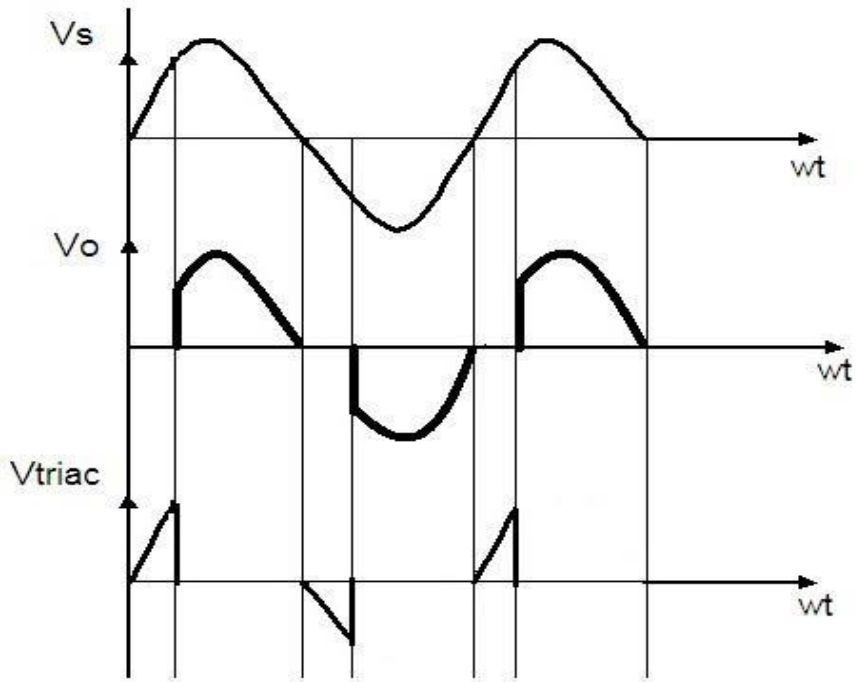

PROCEDURE:

1. Connections are given as per the circuit diagram
2. With resistive load and firing angle zero degree the o/p is noted.
3. For various values of firing angle, obtained waveforms are noted .
4. Voltage across the TRIAC are measured using multimeter.
5. Compare theoretical values using formula with the actual value obtained in CRO.

RESULT

Thus the operation and performance of the single phase AC voltage control using TRIAC is done and output Verified

CIRCUIT DIAGRAM

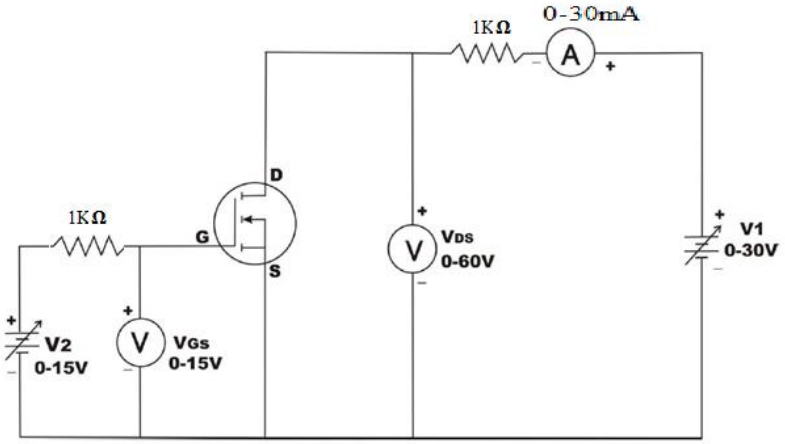

MOSFET SYMBOL

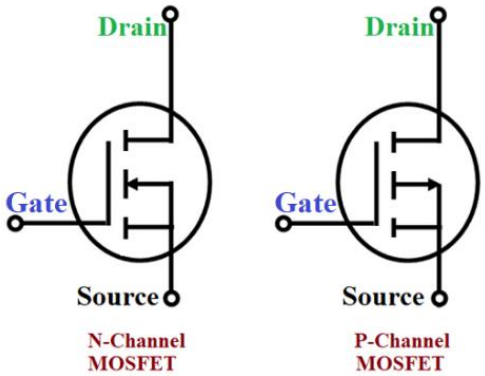

Pin Configuration of MOSFET

MODEL GRAPH

DRAIN CHARACTERISTICS

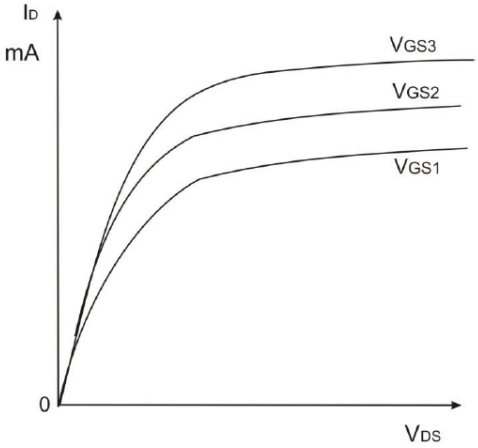
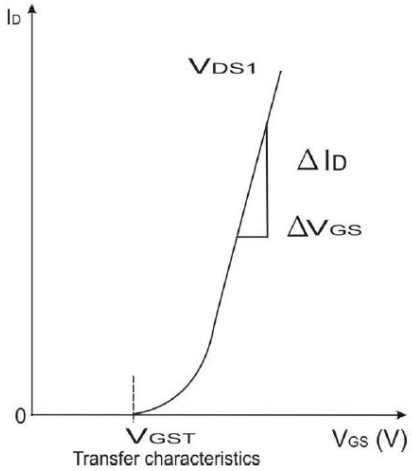
TANSFER CHARACTERISTICS