Date:

Ex. No. 2 **CHARACTERISTICS OF TRIAC**

AIM:

To obtain the following static characteristics of a given TRIAC

(a) Forward conduction characteristics (Va Vs Ia)

(b) Reverse conduction characteristics (Va Vs Ia in reverse direction)

A**PPARATUS REQUIRED**:

S.No.	APPARATUS	RANGE	TYPE	QUANTITY
1	Triac	-	-	1
2	Regulated Power Supply	(0-30) V		1
3	Voltmeter	(0-20) V	MC	1
4	Ammeter	(0-100)mA	MC	1
5	Ammeter	(0-100)μA	MC	1
6	Resistor	470Ω,560Ω		1
7	Connecting wires			Few

PROCEDURE:

1. Connections are made as per the circuit diagram.
2. Fix the gate current by varying RPS at gate for forward direction.
3. With the help of RPS at MT_1 to MT_2 side note down the values of Ia for various values of Va.
4. The above steps are repeated for different values of $I_{G.}$
5. Draw the graph between Va and Ia
6. Repeat the same with terminals reversed to obtain the reverse characteristics of TRIAC
7. For reverse direction change MT_1 and MT_2 terminals or RPS and repeat from STEP 2 to 6 and note down the readings for reverse direction

MODEL GRAPH

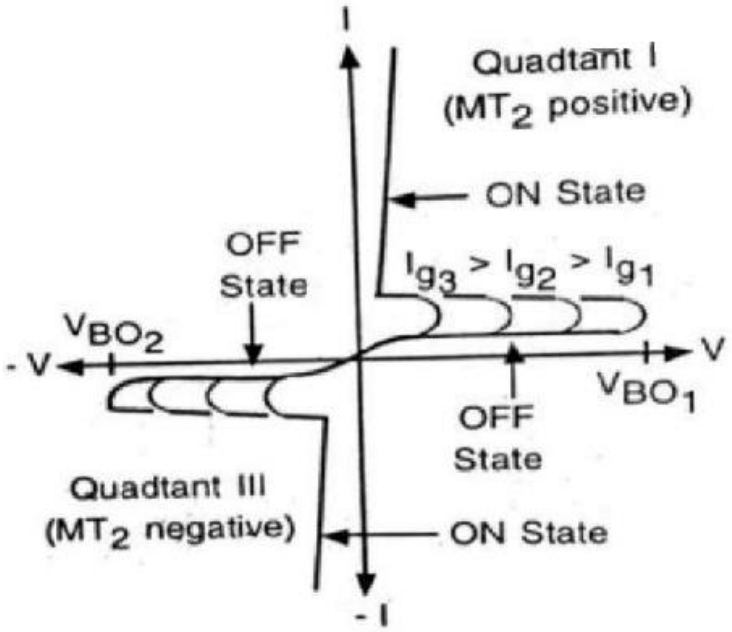

TABULATION

FORWARD CHARACTEISTICS

S.No	V_A (V)	I_A (mA)

REVERSE CHARACTERISTICS

S.No	V_A (V)	I_A (mA)

THEORY:

An TRIAC is a device which can be turned on through the gate pulse for both positive and negative values of V_{AK} and turned off using power circuit i.e., turn on is controlled but turn off is uncontrolled in a TRIAC. The voltage at which the TRIAC gets into conduction state is called forward breakover voltage(V_{BO}) for positive voltages and reverse breakover voltage (V_{BR}) for negative voltgaes.. If the gate current is increased then the forward breakover and reverse breakover voltages will be reduced.

The current at which the TRIAC turns on is called latching current (I_L). Once the TRIAC is turned on , no need of the gate pulse i.e., gate pulse can be removed once the device is turned on. The minimum current required for the device to keep the thyristor on is holding current (I_H).. When the gate current is increased, the breakover voltage values will be reduced.

RESULT

The characteristics of TRAIC are done in Forward and Reverse conduction mode and the characteristics were plotted.

CIRCUIT DIAGRAM

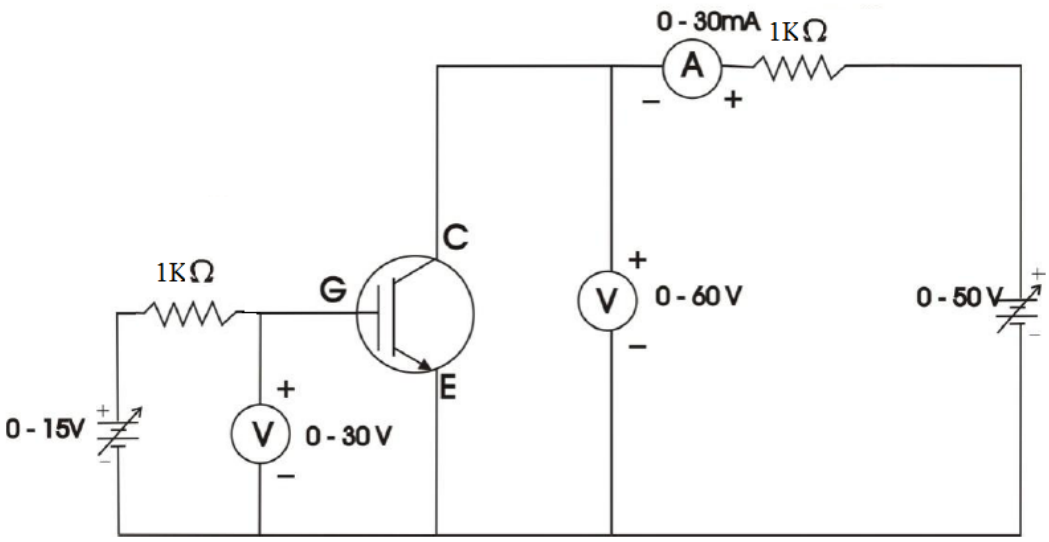

IGBT SYMBOL

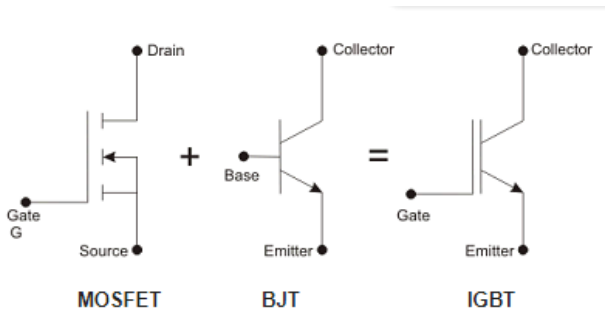

PIN CONFIGURATION

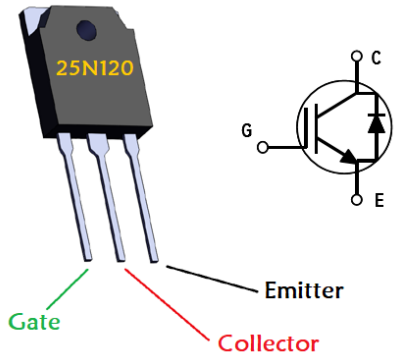

MODEL GRAPH

DRAIN CHARACTERISTICS

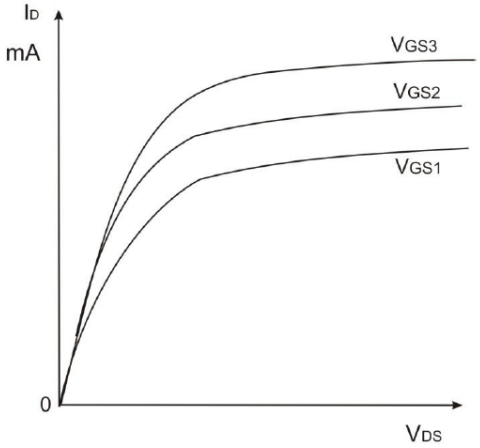
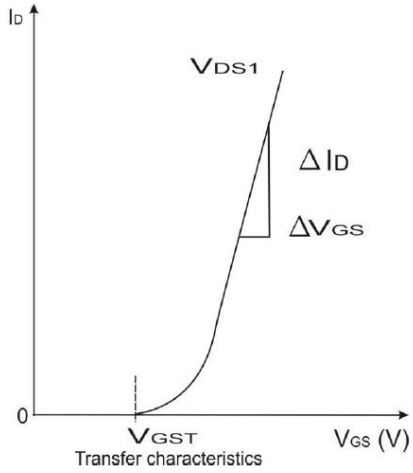
TANSFER CHARACTERISTICS