Date:

Ex. No. 3 **CHARACTERISTICS OF IGBT**

AIM :

To obtain the output resistance and transconductance from drain characteristics and transfer characteristics respectively of IGBT

A**PPARATUS REQUIRED**:

S.No.	APPARATUS	RANGE	TYPE	QUANTITY
1	MOSFET & IGBT Module kit	220 V / 5 A		1
3	Regulated Power Supply	(0-30) V		1
5	Voltmeter	(0-20) V	MC	1
7	Resistor	5 KΩ, 1 kΩ		1
8	Patch Chords			10

THEORY:

IGBT is a new development in the area of power MOSFET technology. This device combines in to it the advantages of both MOSFET and BJT. So an IGBT has high input impedance like a MOSFET and low ON-state power loss in a BJT.

The parameters of and their symbols are similar to that of MOSFET's except that the subscripts for source and drain are changed to emitter and collector respectively. The current rating of a IGBT can up to 400A and the switching frequency can be up to 20KHz. IGBT's finding applications in medium power applications such as dc and ac motor drives, power supplies, solid-state relays and contactors.

TABULATION

DRAIN CHARACTERISTICS

S.No	V_{GS} = ….(V)		V_{GS} = ….(V)	
	V_{DS} (mV)	I_D (mA)	V_{DS} (mV)	I_D (mA)

TRANSFER CHARACTERISTICS

S.No	V_{DS} = ….(V)		V_{DS} = ….(V)	
	V_{GS} (mV)	I_D (mA)	V_{GS} (mV)	I_D (mA)

CALCULATION:

Trans conductance:

$$g_m = \left| \frac{\Delta I_D}{\Delta V_{GS}} \right| = _____ \text{mho at constant } V_{DS}$$

Output Resistance:

$$R_0 = \left| \frac{\Delta V_{DS}}{\Delta I_D} \right| = _____ \Omega \text{ at constant } V_{GS}$$

PROCEDURE:

Drain or Output Characteristics:

1. Make the connections as per the circuit diagram.
2. Initially keep V_1 and V_2 at zero volts.
3. By varying V_2, set V_{GS} to some constant voltage (must be more than Threshold voltage).
4. By gradually increasing V_1, note down the corresponding value of V_{DS} and
5. I_D. (Note: Till the MOSFET jump to conducting state, the voltmeter which is connected across device as V_{DS} reads approximately zero voltage. Further increase in voltage by V_1 source cannot be read by V_{DS}, so connect multimeter to measure the voltage and tabulate the readings in the tabulation.
6. Set V_{GS} to some other

Transfer Characteristics:

1. Make the connections as per the circuit diagram.
2. Initially keep V_1 and V_2 at 0 V.
3. Switch ON the regulated power supplies. By varying V_1, set V_{DS} to some constant voltage say 5V.
4. Vary V_2 in steps of 0.5V, and at each step note down the corresponding values of V_{GS} and I_D. (Note: note down the value of V_{GS} at which I_D starts increasing as the threshold voltage).
5. Reduce V_1 and V_2 to zero.
6. By varying V_1, set V_{DS} to some other value say 10V.
7. Repeat step 4.
8. Plot a graph of V_{GS} versus I_D for different values of V_{DS}.

RESULT

The IGBT Characteristics is done and the drain resistance and transconductance is found from the graph.

CIRCUIT DIAGRAM

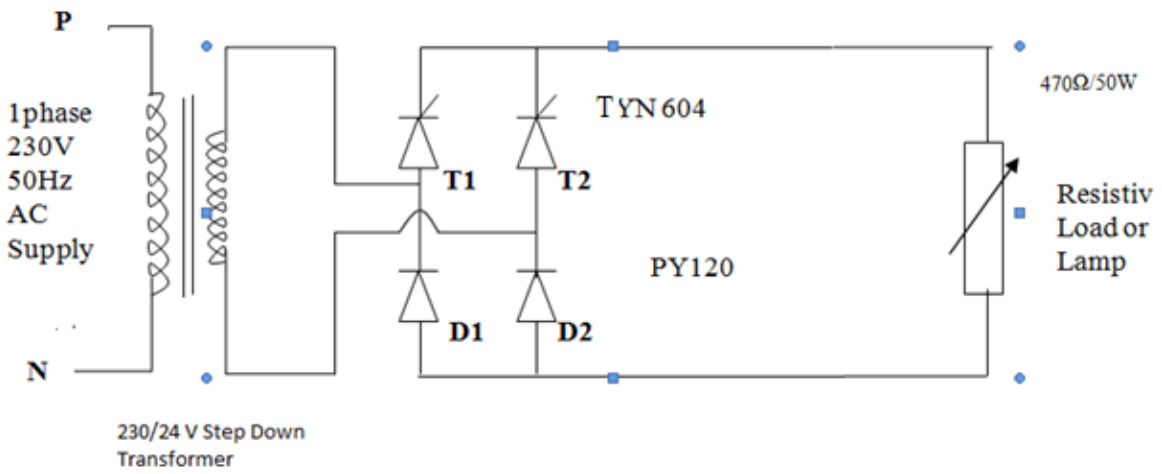

MODEL GRAPH
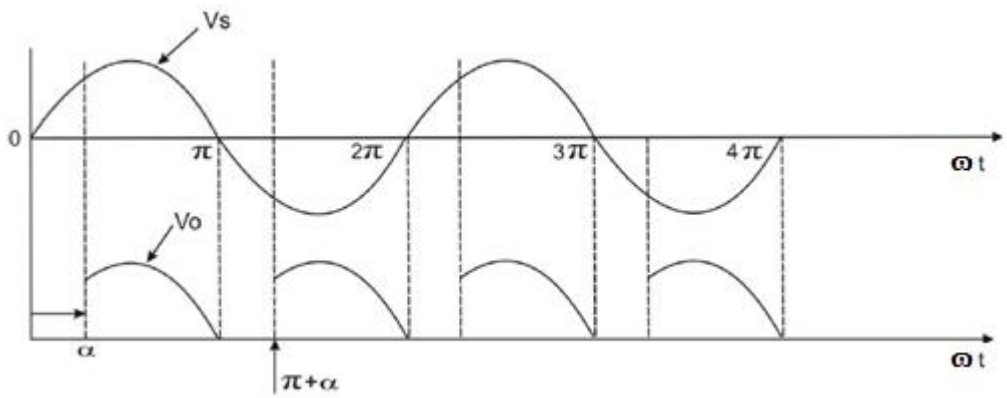
OUTPUT WAVEFORM