DATE :

Ex. No. 5 **SCR BASED HALF CONTROLLED CONVERTER**

AIM:

To find the practical output voltage and compare it with the theoretical value and plot the output voltage waveform and control characteristics for the various triggering angle

APPARATUS REQUIRED:

S.NO.	APPARATUS	RANGE	TYPE	QUANTITY
1	Input power module	-	-	1
2	Line synchronized UJT firing circuit module	-	-	1
3	SCR module	-	-	1
4	Isolation Transformer	230V/48 V	-	1
6	Loading Rheostat	100Ω / 2A	-	1
7	CRO	20MHz	-	1
8	Patch chords			Few

FORMULA:

1. The average output voltage of half controlled rectifier with resistive load is given by

$$V_{o(avg)} = \frac{V_m}{\pi}(1 + cos\alpha)$$

Where V_m is the maximum output voltage

α is the firing angle or triggering angle

2. **The output current in the resistive load is** $I_o = \frac{V_o}{R}$

$$I_o = \frac{V_m}{\pi R}(1 = cos\alpha)$$

CONTROL CHARACTERISTICS

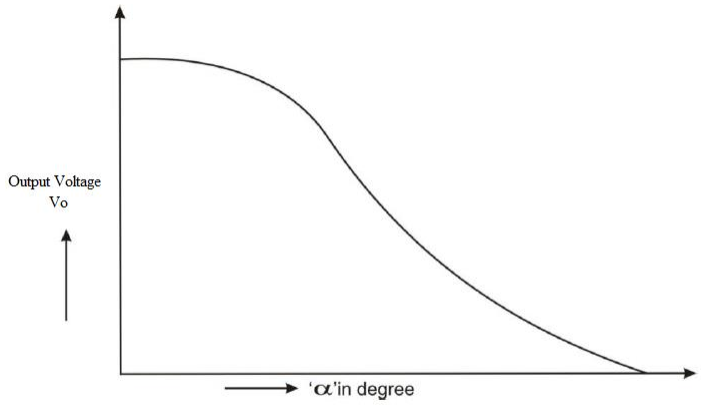

TABULATION:

V_{in}=_____V

S.No.	Time Period		Firing Angle α (in Degree)	Output Voltage Vo (Volts)	
	T_{on} (ms)	T_{off} (ms)		Practical	Theoretical

THEORY

An Half controlled rectifier is a single pulse converter where motoring operation can be done that takes place in First quadrant. Power Module half controlled or semiconverter consists of 2 SCR's and 2 diodes in symmetric and asymmetric configuration.

Firing unit generates four line synchronized firing pulses to trigger four SCR's of single phase fully controlled bridge power circuit. Firing circuit is based on ramp generator. Comparator, pulse generator, pulse amplification and pulse triggering method. Gate pulses are taken out through isolation pulse transformer. Firing angle can be varied from 180° to 0° on gradual scale marked

PROCEDURE:

1. Make the connections as per the circuit diagram to the loading rheostat
2. Connect the gating signal from the UJT firing circuit module to the gate and cathode of SCR using the patch cords
3. Switch on the thyristor kit and firing circuit kit.
4. Vary the firing angle from 0 to 180 degree.
5. Use channel one for measuring input waveforms and channel 2 across load to observe and measure the output waveforms.

RESULT

The practical output voltage is verified with theoretical values and the graphs are plotted

CIRCUIT DIAGRAM :

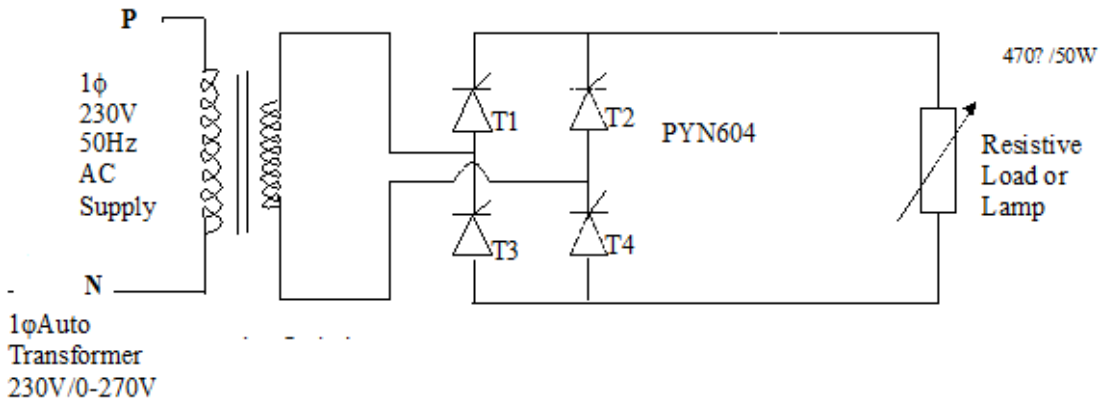

MODEL GRAPH

OUTPUT WAVE FORMS
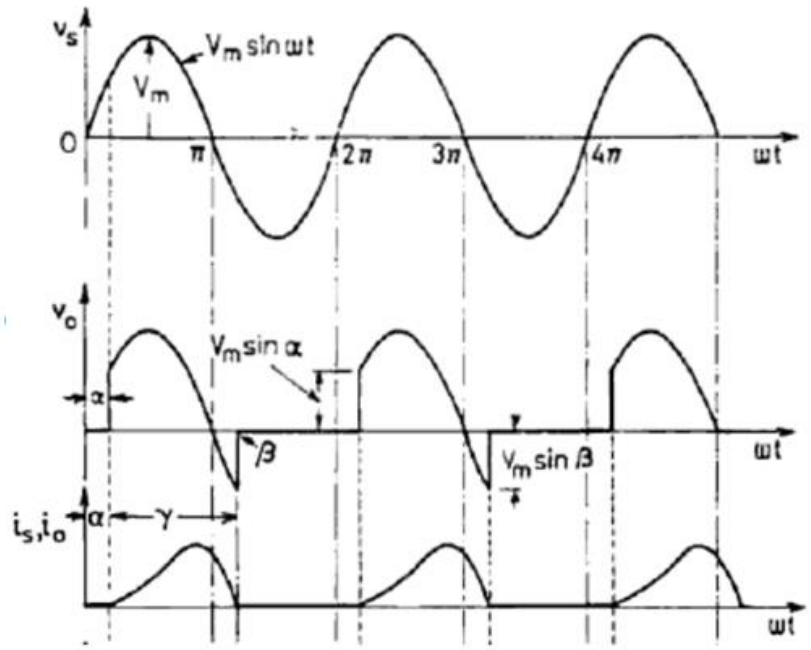
Discontinuous Mode