**Date:**

**Ex.NO:7** **SCR BASED FULL CONTROLLED CONVERTER**

**AIM:**

To find the practical output voltage and compare it with the theoretical value and plot the output voltage waveform and control characteristics for the various triggering angle For R and RL Load

**APPARATUS REQUIRED:**

| S.NO | ITEM | RANGE | TYPE | QUANTITY |
|---|---|---|---|---|
| 1 | Fully controlled converter Power circuit kit | 1ϕ, 230V,10A | - | 1 |
| 3 | SCR firing circuit kit | 1Φ ,230V,5A | - | 1 |
| 4 | Isolation Transformer | 230V/115-55-0-55-115 | - | 1 |
| 5 | Auto-transformer | 230V/0-270V, 4A | - | 1 |
| 6 | Loading Rheostat | 100Ω / 2A | - | 1 |
| 7 | CRO | 20MHz | - | 1 |
| 8 | Patch chords | - | - | Few |

**FORMULA :**

1. **R- LOAD**
   a. The average output voltage of half controlled rectifier with resistive load is given by

$$V_{o(avg)} = \frac{V_m}{\pi}(1 + cos\alpha)$$

Where $V_m$ is the maximum output voltage

α is the firing angle or triggering angle

b. The output current in the resistive load is $I_o = \frac{V_o}{R}$

$$I_o = \frac{V_m}{\pi R}(1 + cos\alpha)$$

**Continuous Mode**

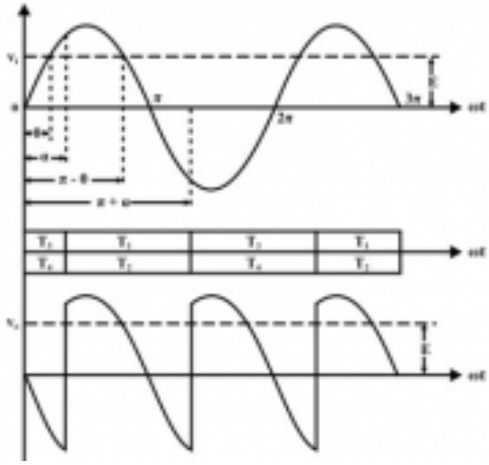

**Control Characteristics**

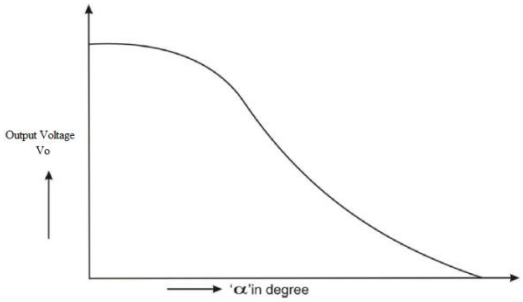


**TABULATTION:**

| S.No. | Time Period | | Firing Angle α (in Degree) | Output Voltage Vo (Volts) | |
|---|---|---|---|---|---|
| | $T_{on}$ (ms) | $T_{off}$ (ms) | | Practical | Theoretical |
| | | | | | |

2. **RL- LOAD**

a. **Discontinuous Mode:**

i. The average output voltage of half controlled rectifier with resistive load is given by

$$V_{o(avg)} = \frac{V_m}{\pi}(\cos\alpha - cos\beta)$$

Where $V_m$ is the maximum output voltage

α is the firing angle or triggering angle

ii. The output current in the resistive load is $I_o = \frac{V_o}{R}$

$$I_o = \frac{V_m}{\pi R}(cos\alpha - \cos\beta)$$

b. **Continuous Mode : Sub β = π+α**

i. The average output voltage of half controlled rectifier with resistive load is given by

$$V_{o(avg)} = \frac{2V_m}{\pi}\cos\alpha$$

Where $V_m$ is the maximum output voltage

α is the firing angle or triggering angle

ii. The output current in the resistive load is $I_o = \frac{V_o}{R}$

$$I_o = \frac{2V_m}{\pi R}cos\alpha$$

**PROCEDURE:**

1. Make the connections as per the circuit diagram..
2. Keep the multiplication factor of the CRO's probe at the maximum position.
3. Switch on the thyristor kit and firing circuit kit.
4. Keep the firing circuit knob at the 180 ° position.
5. Vary the firing angle in steps.
6. Note down the voltmeter reading and waveform from the CRO.
7. Switch off the power supply and disconnect.

**RESULT :**

The practical output voltage is verified with theoretical values and the graphs are plotted for fully controlled rectifier

**CIRCUIT DIAGRAM:**

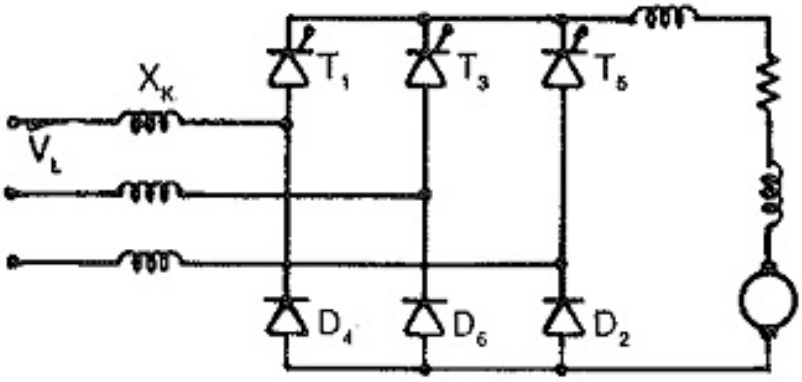


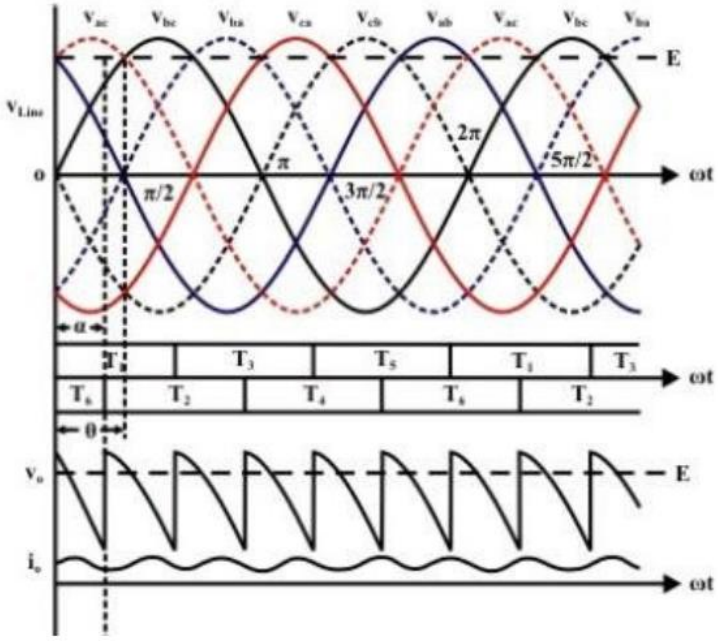

**DATE:**

## Ex.No:8 SIMULATION OF SCR BASED THREE PHASE FULLY CONTROLLED CONVERTER

**AIM:**

To simulate three phase fully controlled converter with R,RL,RLE load and plot the output voltage across the load and current through the load

**APPARATUS REQUIRED:**

MATLAB software, PC

**PROCEDURE:**

1. Open MATLAB
2. Open Library browser
3. Open --> File ---> new ---> model
4. Go to Sim power Syatems.
5. Search for Source, Power Devices, Elements, and Load.
6. Click and drag the components required and as per the circuit diagram
7. Connect the components and double click on the components to change the block parameters.
8. Find the Measurement devices like voltage and current measurement
9. Connect the scope and run the simulation.
10. Change the run time if required.
11. Click on the scope to verify the output.

**RESULT:**

The output waveforms are observed using MATLAB/SIMULINK for three phase fully controlled converter with R,RL,RLE load

**CIRCUIT DIAGRAM**

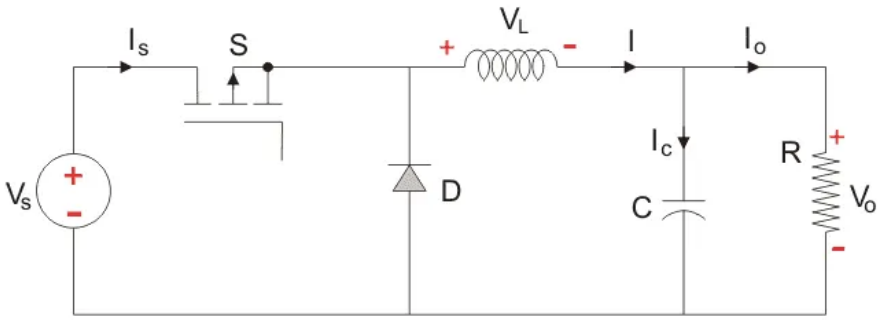


**MODEL GRAPH**
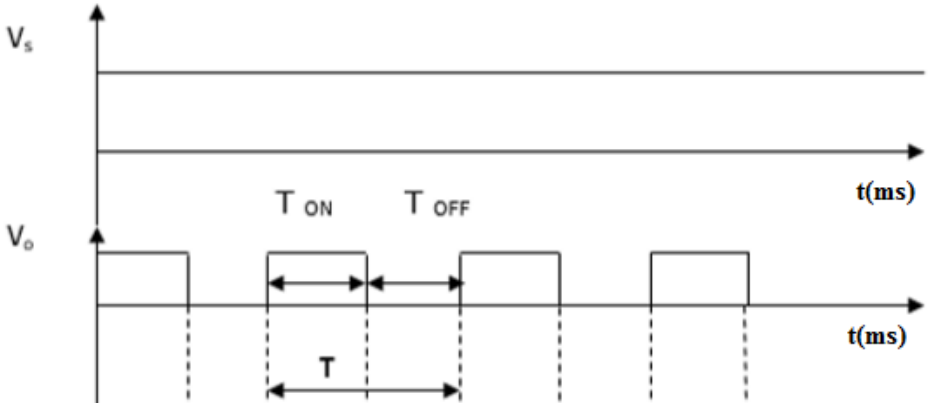
**OUTPUT WAVEFORMS**