DATE:

Ex.No:8 SIMULATION OF SCR BASED THREE PHASE FULLY CONTROLLED CONVERTER

AIM:

To simulate three phase fully controlled converter with R,RL,RLE load and plot the output voltage across the load and current through the load

APPARATUS REQUIRED:

MATLAB software, PC

PROCEDURE:

1. Open MATLAB
2. Open Library browser
3. Open --> File ---> new ---> model
4. Go to Sim power Syatems.
5. Search for Source, Power Devices, Elements, and Load.
6. Click and drag the components required and as per the circuit diagram
7. Connect the components and double click on the components to change the block parameters.
8. Find the Measurement devices like voltage and current measurement
9. Connect the scope and run the simulation.
10. Change the run time if required.
11. Click on the scope to verify the output.

RESULT:

The output waveforms are observed using MATLAB/SIMULINK for three phase fully controlled converter with R,RL,RLE load

CIRCUIT DIAGRAM

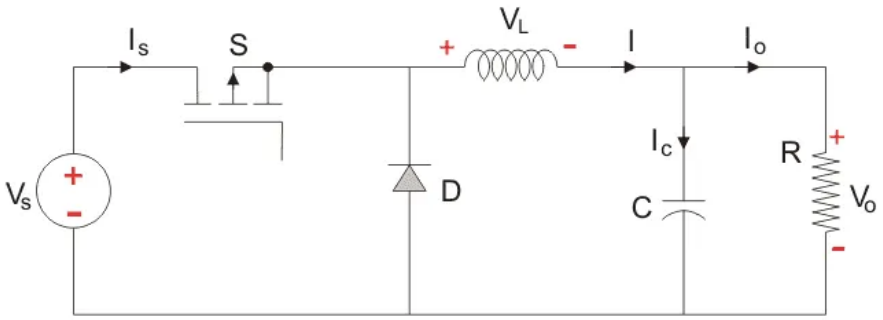

MODEL GRAPH
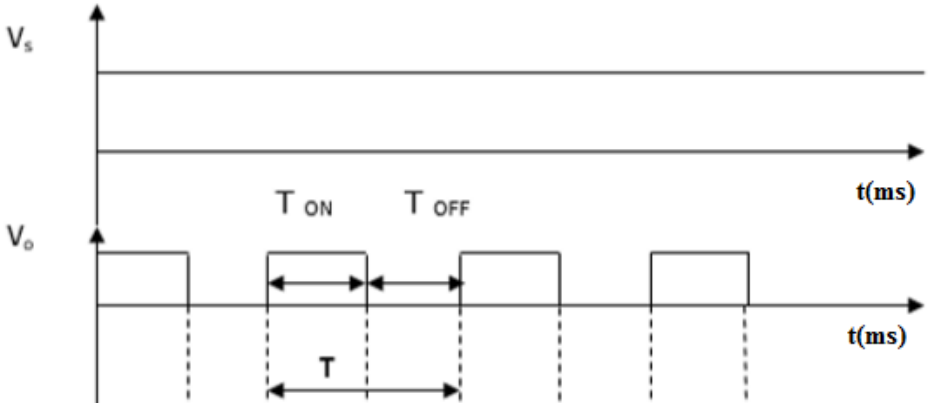
OUTPUT WAVEFORMS