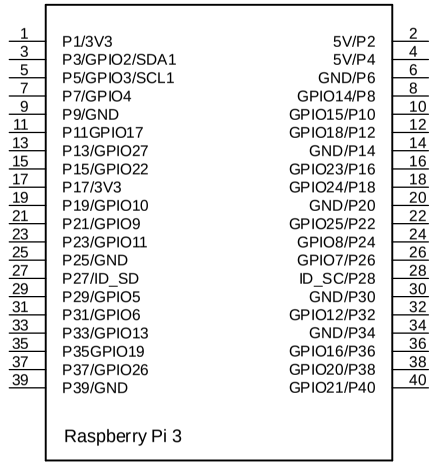

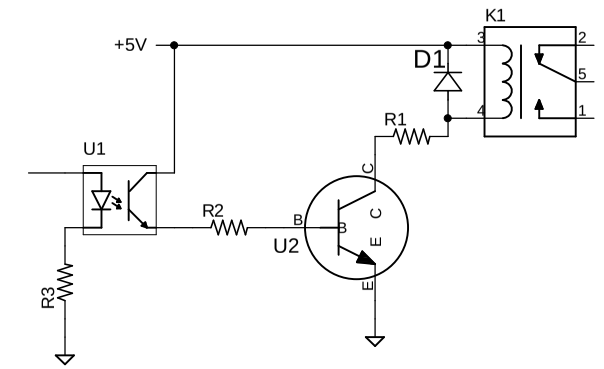

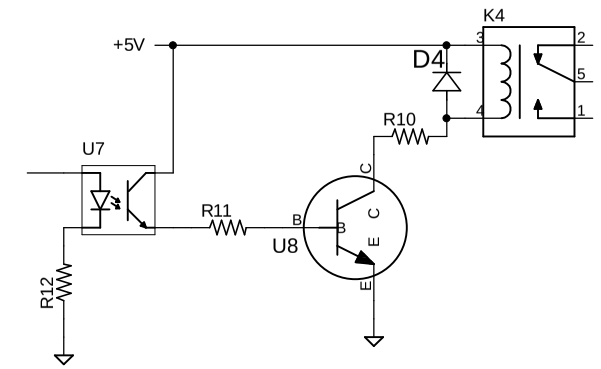

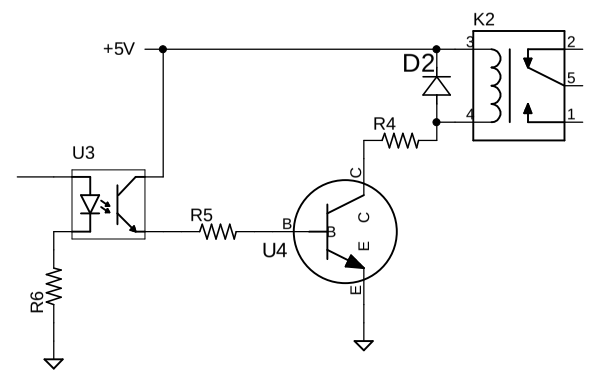

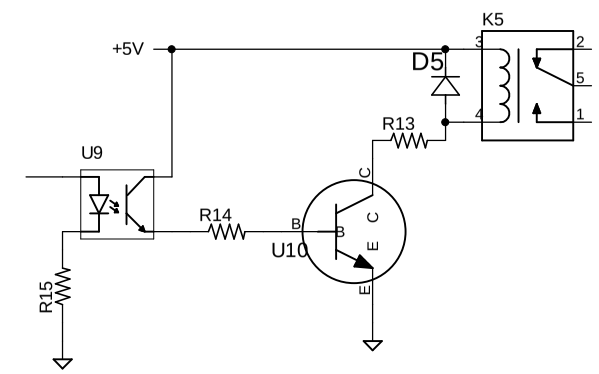

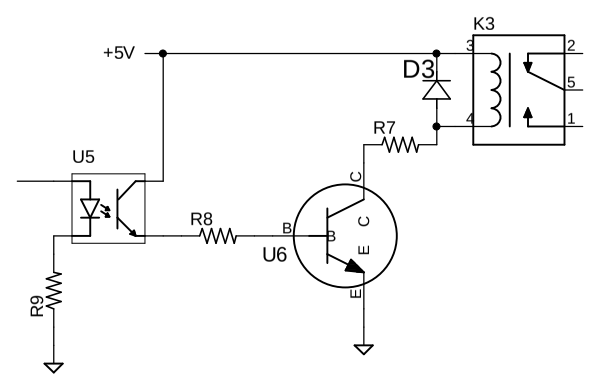

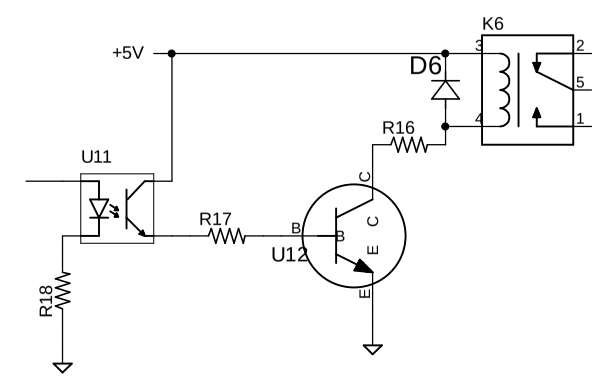

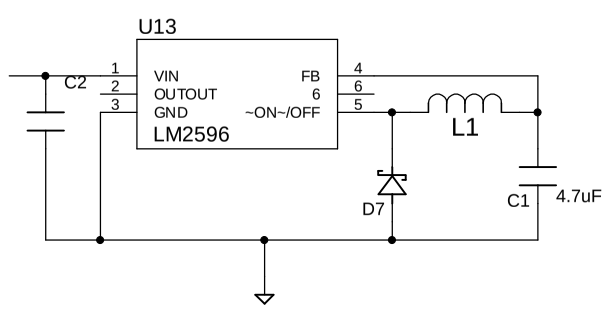

TITLE: FillControl	
Document Number:	REV:
Date: 11/3/2019 10:24 PM	Sheet: 1/1