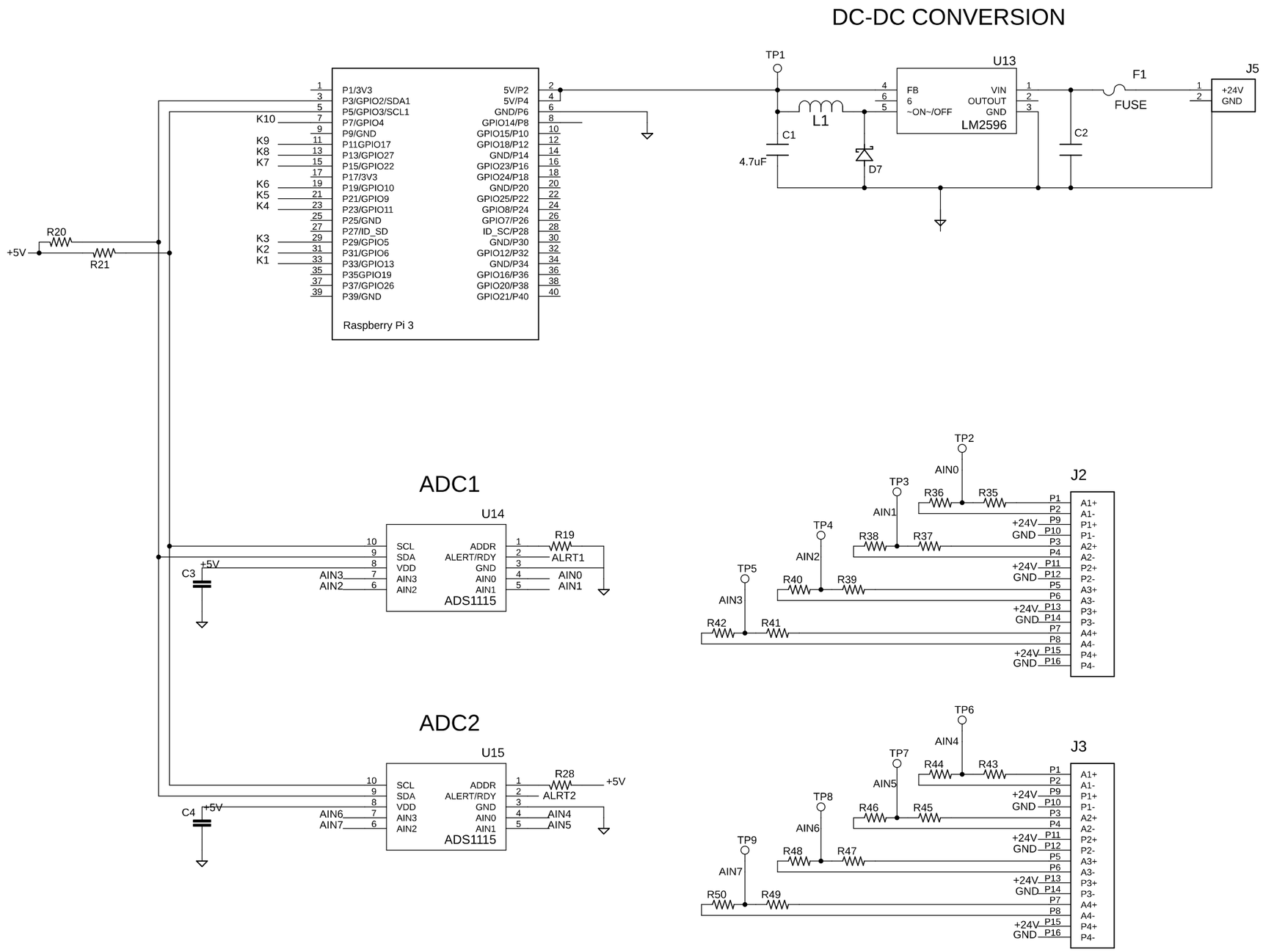

DESIGNED BY: J. BRANDON IAMS

TITLE: FillControl

Document Number: INITIAL DEVELOPMENT

REV: (-)

Date: 11/8/2019 1:38 PM

Sheet: 1/2

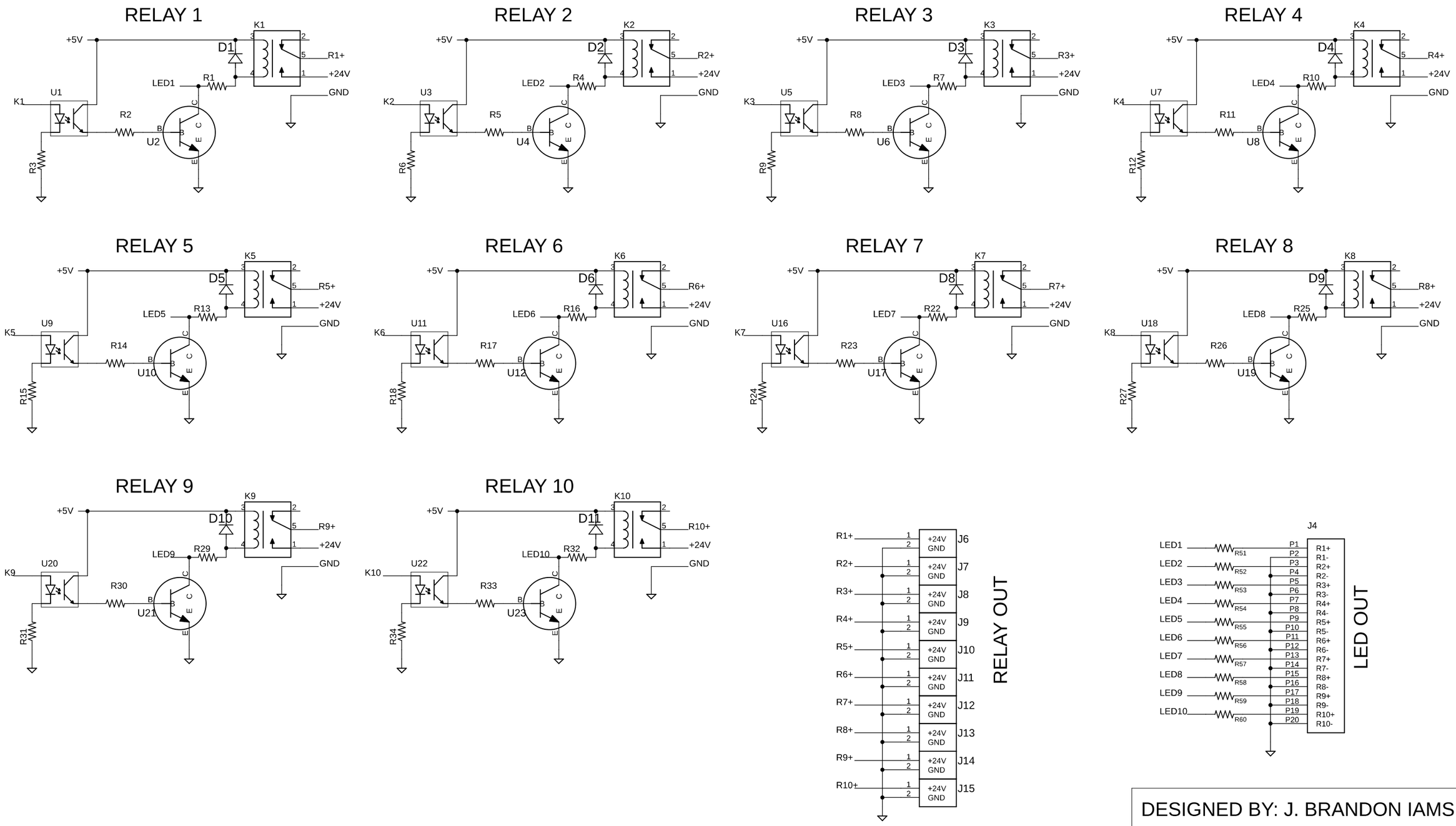

DESIGNED BY: J. BRANDON IAMS

TITLE: FillControl

Document Number: INITIAL DEVELOPMENT

REV: (-)

Date: 11/8/2019 1:38 PM

Sheet: 2/2