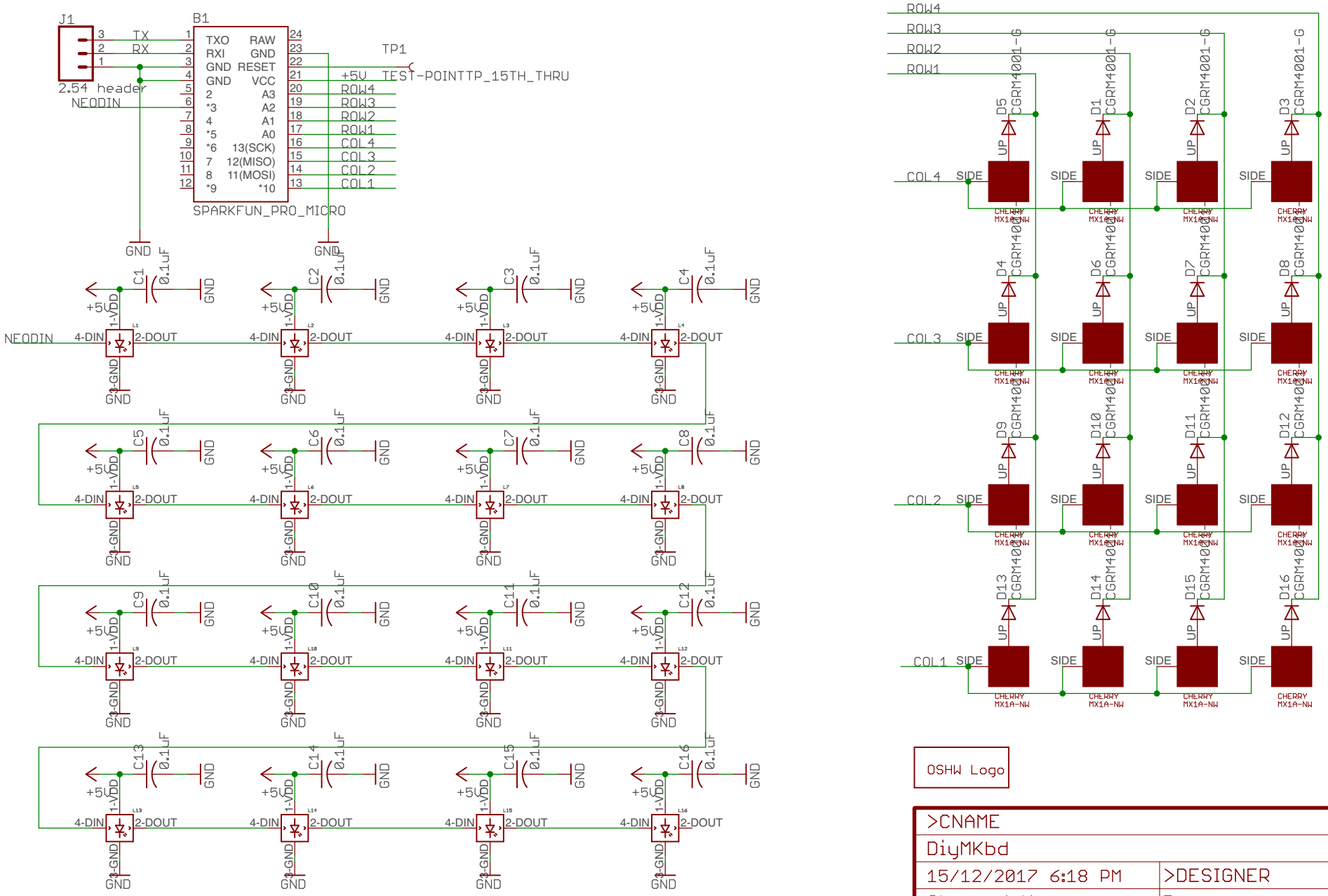
J1
2.54 header
NEODIN
TX
RX
B1
TXO RAW
RXI GND
GND RESET
GND VCC
2 A3
*3 A2
4 A1
*5 A0
*6 13(SCK)
7 12(MISO)
8 11(MOSI)
*9 *10
SPARKFUN_PRO_MICRO
TP1
TEST-POINTTP_15TH_THRU
+5V
ROW4
ROW3
ROW2
ROW1
COL4
COL3
COL2
COL1
GND
C1 0.1uF
C2 0.1uF
C3 0.1uF
C4 0.1uF
C5 0.1uF
C6 0.1uF
C7 0.1uF
C8 0.1uF
C9 0.1uF
C10 0.1uF
C11 0.1uF
C12 0.1uF
C13 0.1uF
C14 0.1uF
C15 0.1uF
C16 0.1uF
1-VDD
2-DOUT
3-GND
4-DIN
D5 CGRM4001-G
D1 CGRM4001-G
D2 CGRM4001-G
D3 CGRM4001-G
D4 CGRM4001-G
D6 CGRM4001-G
D7 CGRM4001-G
D8 CGRM4001-G
D9 CGRM4001-G
D10 CGRM4001-G
D11 CGRM4001-G
D12 CGRM4001-G
D13 CGRM4001-G
D14 CGRM4001-G
D15 CGRM4001-G
D16 CGRM4001-G
UP
SIDE
CHERRY MX1A-NW
OSHW Logo
>CNAME
DiyMKbd
15/12/2017 6:18 PM
>DESIGNER
Sheet: 1/1
Rev:>CREVISION