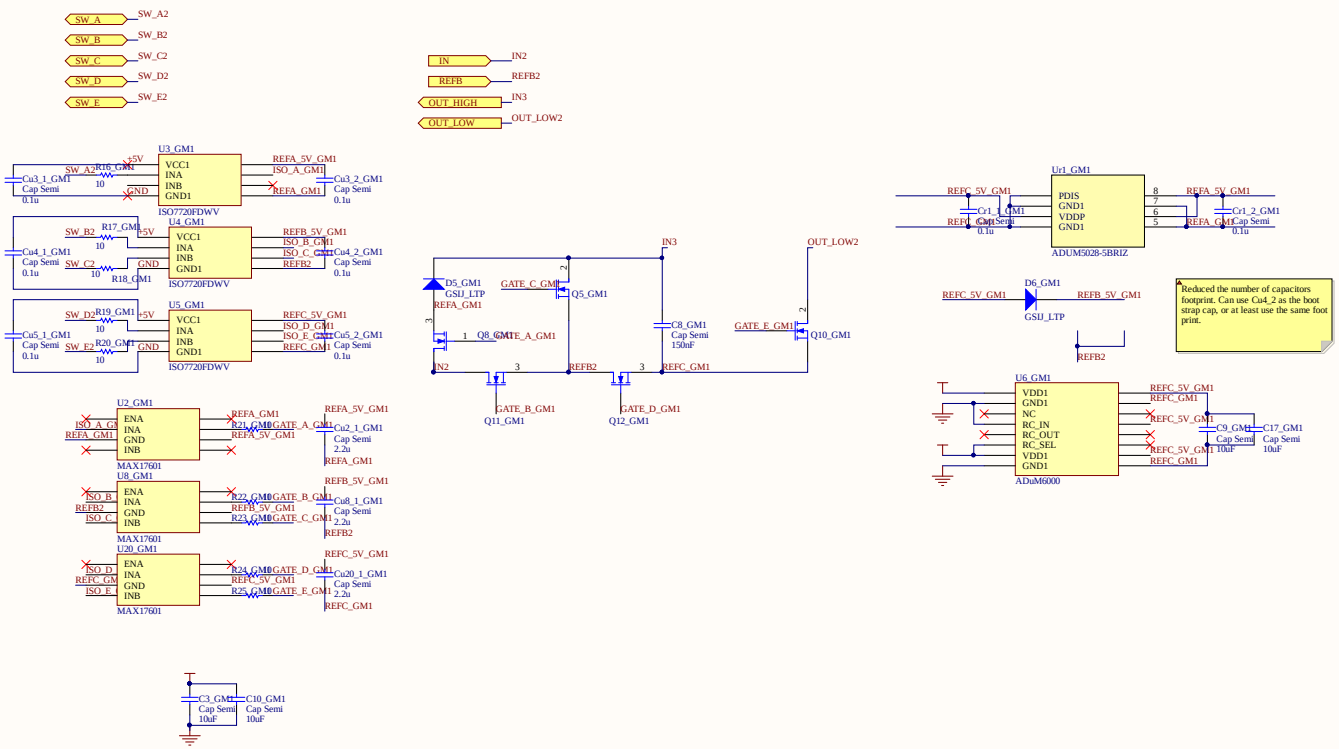

Title *			
Size: C	Number:*	Revision:*	
Date: 10/17/2019	Time: 11:46:57 AM	Sheet * of *	
File: E:\Yiqui's Dropbox\Dropbox (MIT)\High voltage converters - second gen\AC power supply\Switched Cap Inverter\SCMLI_Revision			

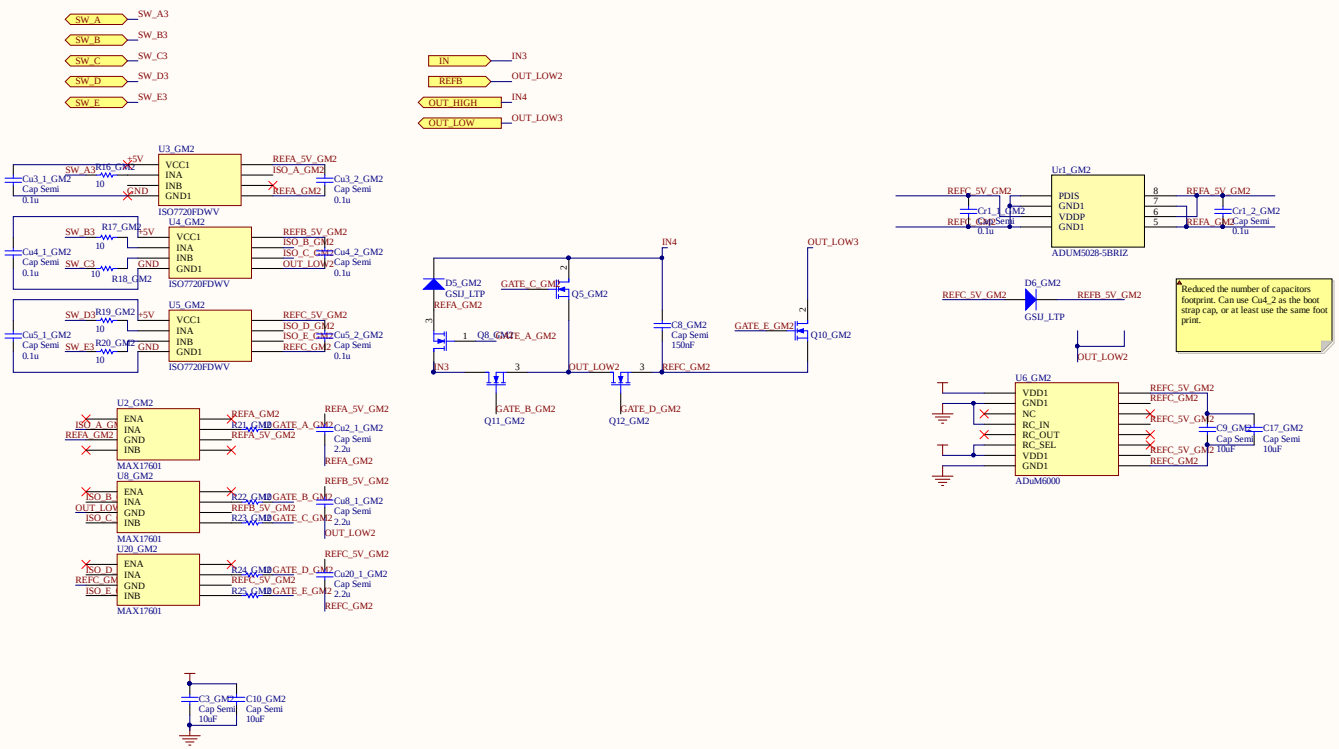

Title *			
Size: C	Number:*	Revision:*	
Date: 10/17/2019	Time: 11:46:59 AM	Sheet * of *	
File: E:\Yiou's Dropbox\Dropbox (MIT)\High voltage converters - second gen\AC power supply\Switched Cap Inverter\SCMLI_Revision			

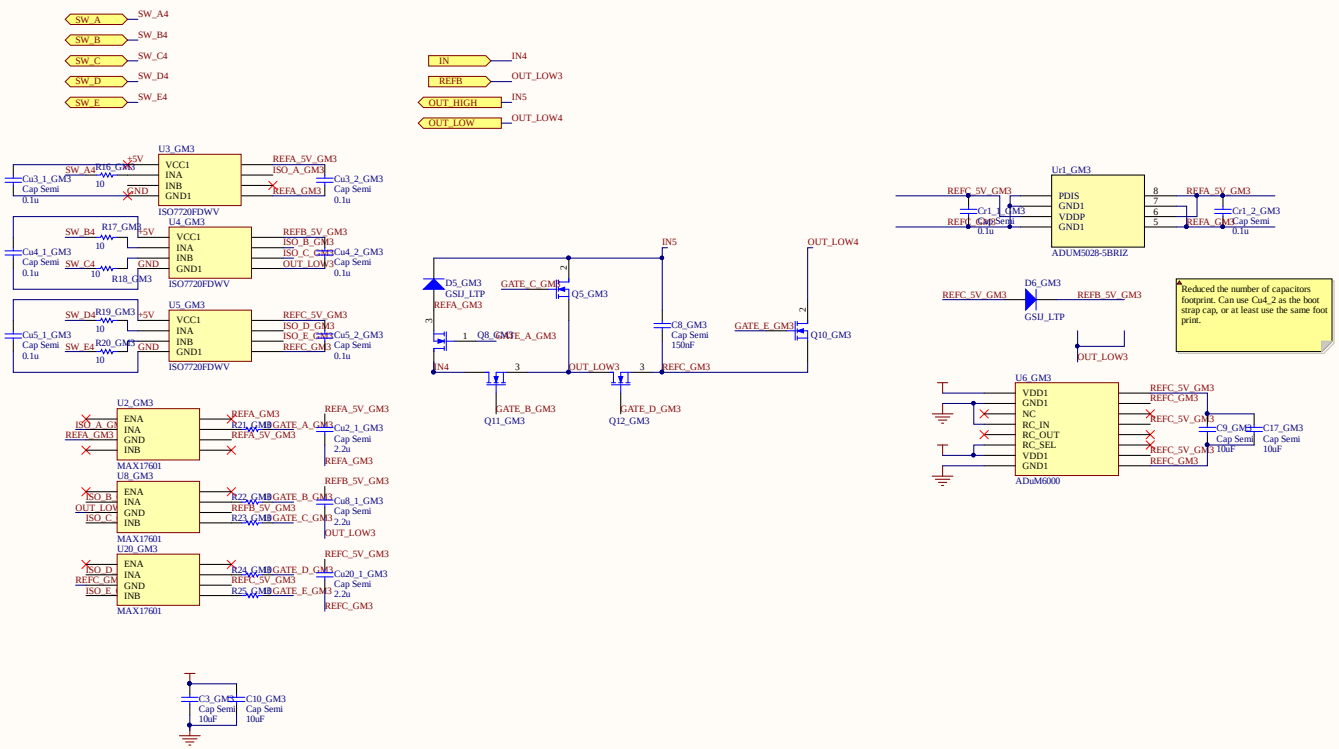

Title *			
Size: C	Number:*	Revision:*	
Date: 10/17/2019	Time: 11:47:01 AM	Sheet * of *	
File: E:\Yiqui's Dropbox\Dropbox (MIT)\High voltage converters - second gen\AC power supply\Switched Cap Inverter\SCMLI_Revision			

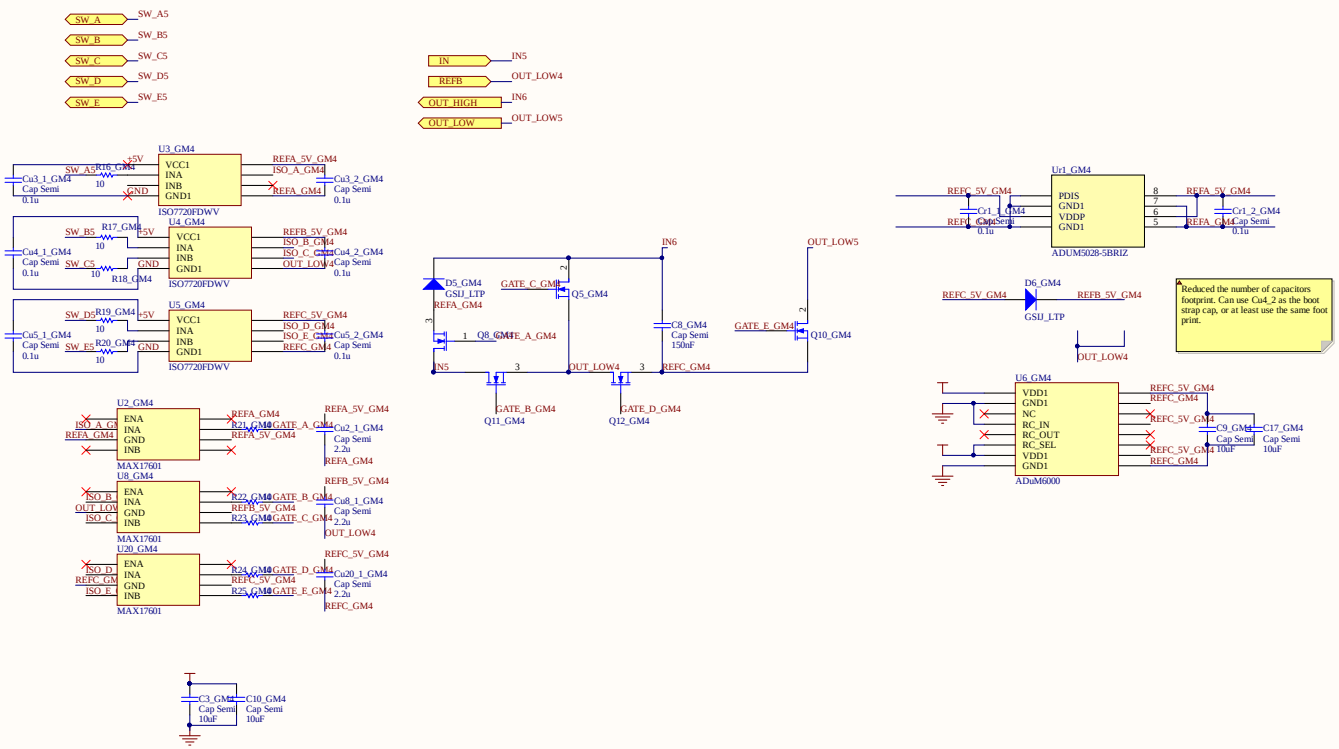

Title *			
Size: C	Number:*	Revision:*	
Date: 10/17/2019	Time: 11:47:03 AM	Sheet * of *	

File: E:\Yiou's Dropbox\Dropbox (MIT)\High voltage converters - second gen\AC power supply\Switched Cap Inverter\SCMLI_Revision

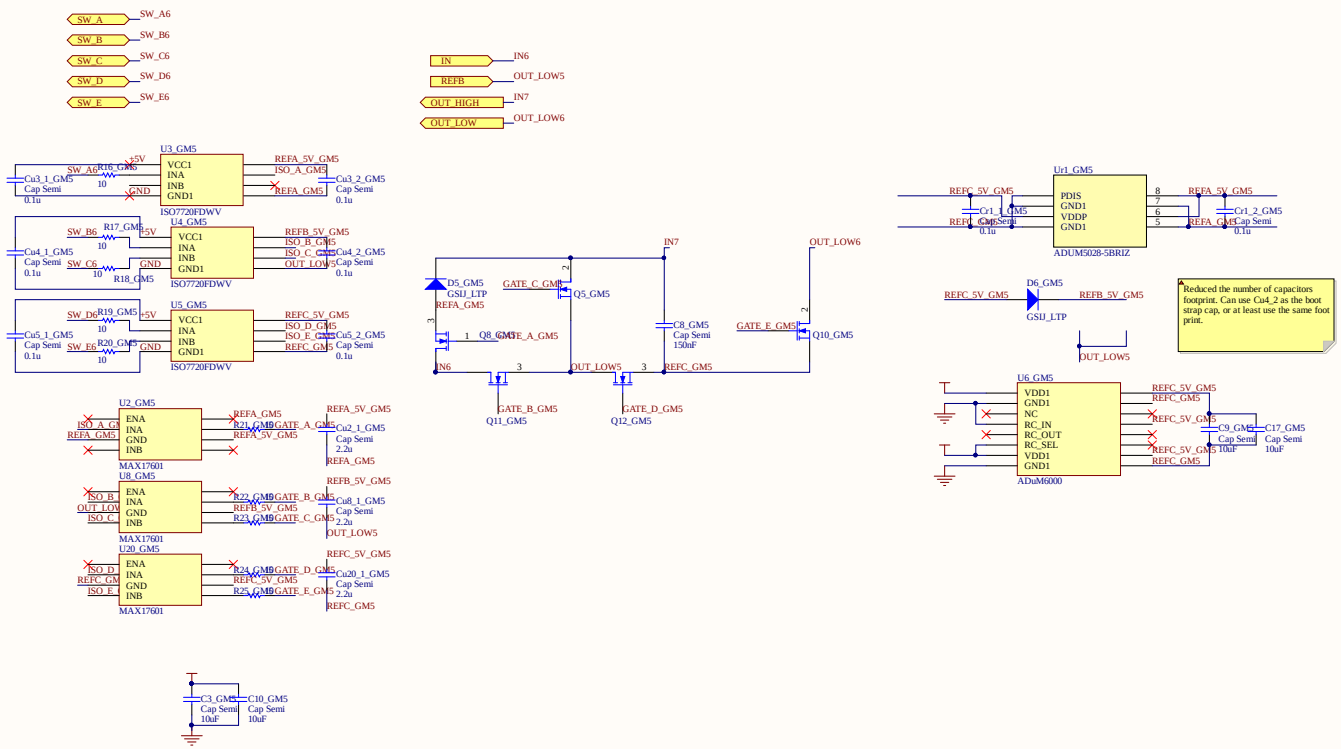

Title *			
Size: C	Number:*	Revision:*	
Date: 10/17/2019	Time: 11:47:05 AM	Sheet * of *	

File: E:\Yiqui's Dropbox\Dropbox (MIT)\High voltage converters - second gen\AC power supply\Switched Cap Inverter\SCMLI_Revision

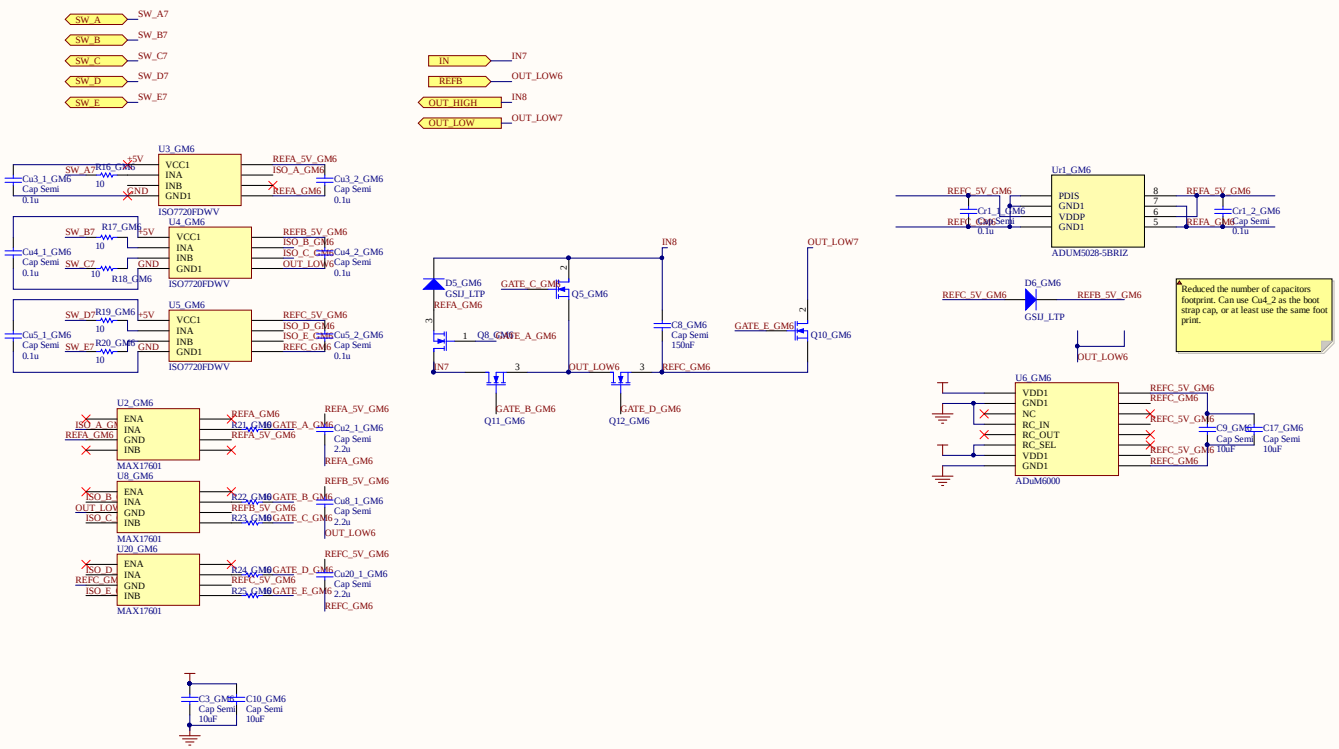

Title *			
Size: C	Number:*	Revision:*	
Date: 10/17/2019	Time: 11:47:07 AM	Sheet * of *	
File: E:\Yiou's Dropbox\Dropbox (MIT)\High voltage converters - second gen\AC power supply\Switched Cap Inverter\SCMLI_Revision			

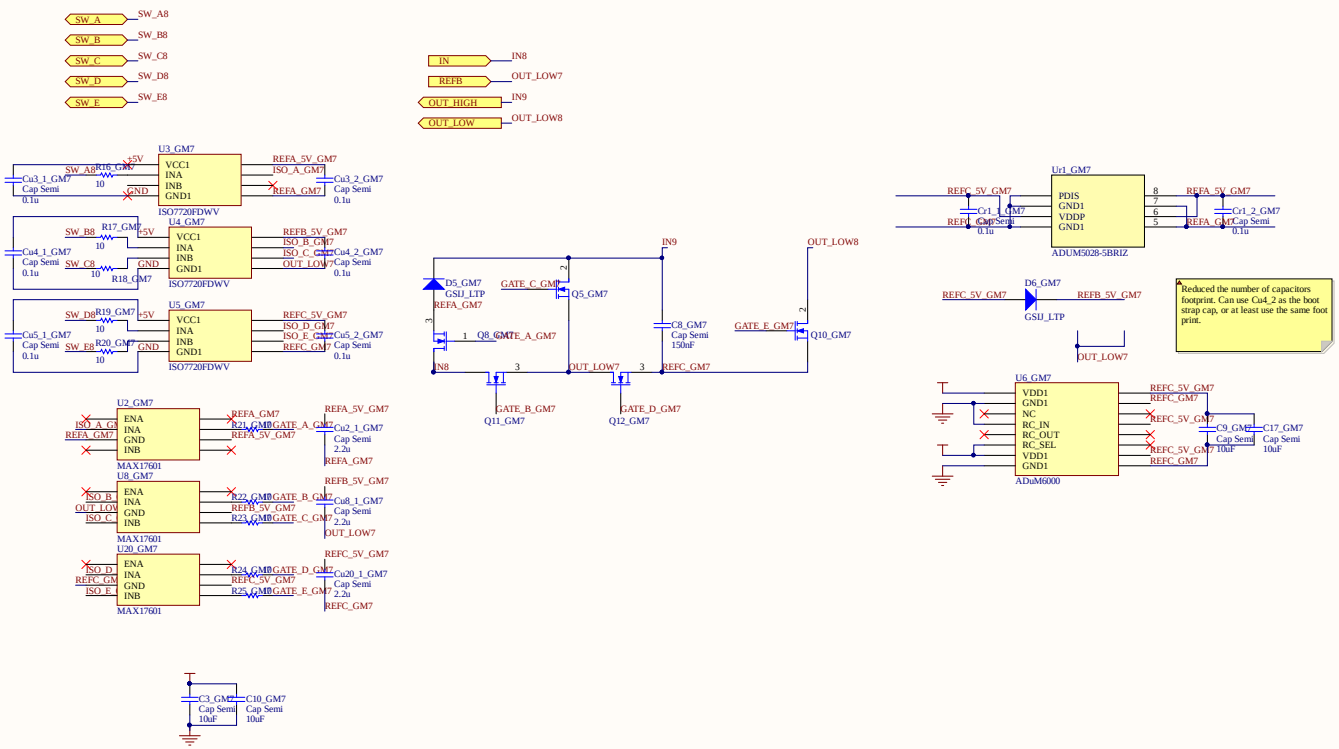

Title *			
Size: C	Number:*	Revision:*	
Date: 10/17/2019	Time: 11:47:09 AM	Sheet * of *	

File: E:\Yiou's Dropbox\Dropbox (MIT)\High voltage converters - second gen\AC power supply\Switched Cap Inverter\SCMLI_Revision

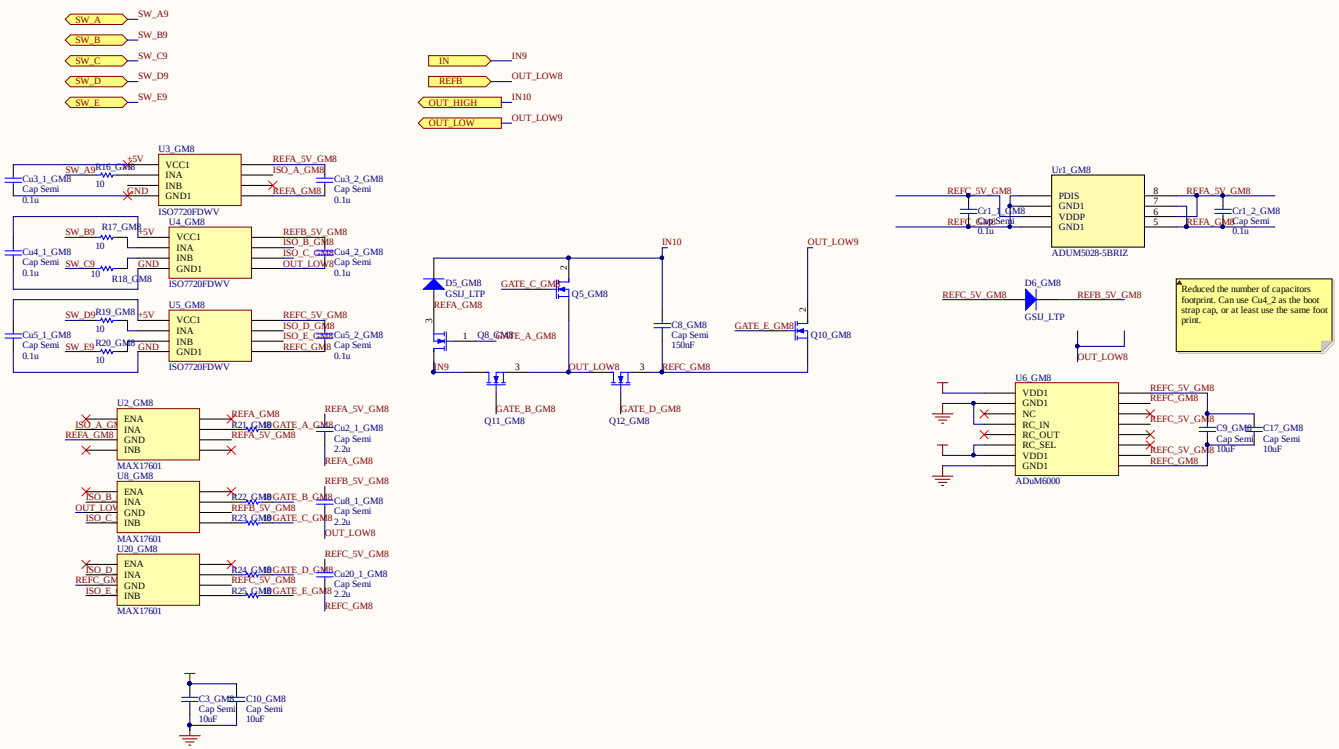

Title *			
Size: C	Number:*	Revision:*	
Date: 10/17/2019	Time: 11:47:11 AM	Sheet * of *	
File: E:\Yiou's Dropbox\Dropbox (MIT)\High voltage converters - second gen\AC power supply\Switched Cap Inverter\SCMLI_Revision			

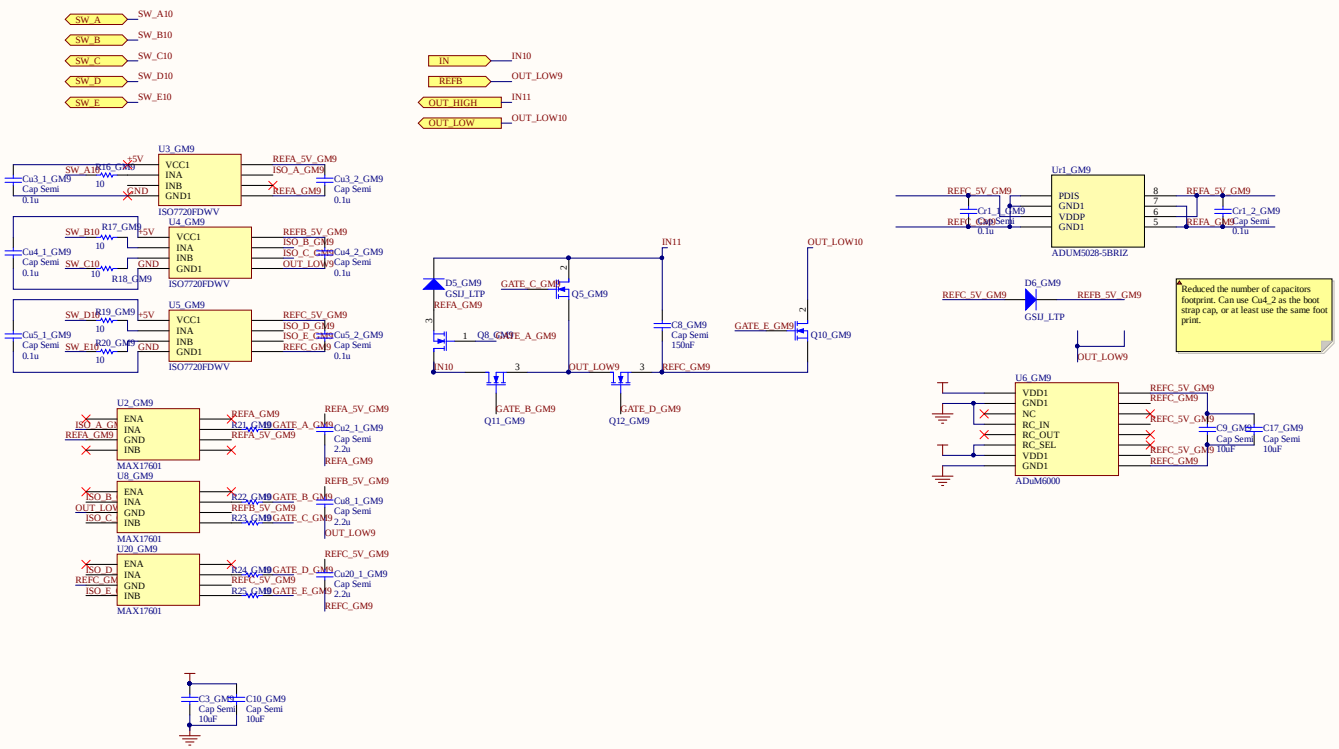

Title *			
Size: C	Number:*	Revision:*	
Date: 10/17/2019	Time: 11:47:12 AM	Sheet * of *	

File: E:\Yiou's Dropbox\Dropbox (MIT)\High voltage converters - second gen\AC power supply\Switched Cap Inverter\SCMLI_Revision

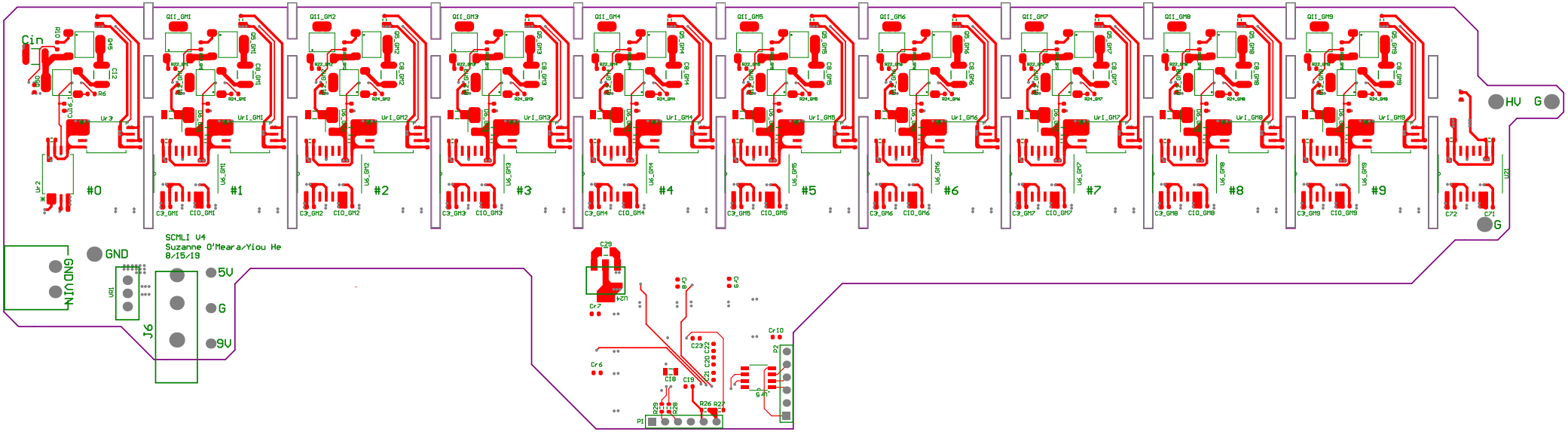
Cin
#0
#1
#2
#3
#4
#5
#6
#7
#8
#9
HV
G
GND
GNDIN
5V
G
9V
J6
SCMLI V4
Suzanne O'Meara/Yiou He
8/15/19

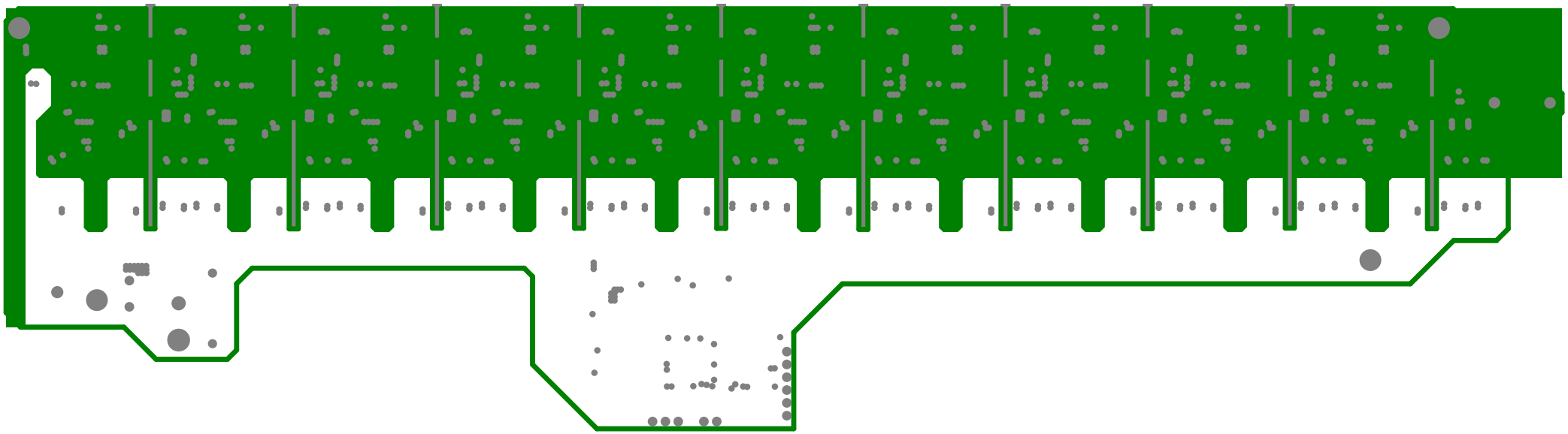

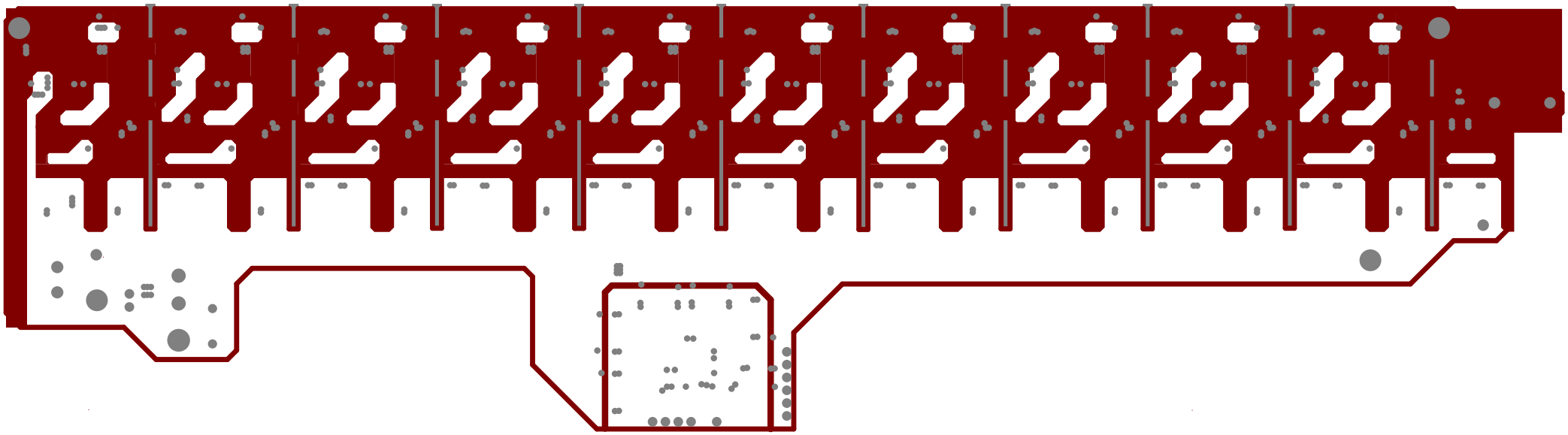

NTUDAQ
an
an
an
an