	WORK INSTRUCTION			Effectivity Date:	June 18, 2024		
	Process Name/Title:	CLAMP ASSEMBLY PROCESS		Validity Date:	n/a		
	Model code/Part number: 310D / 7M0528-7020D	Customer: TRJ	Car Model: TOYOTA RAV4	Document No.:	WI-ENG-PDE-922		
	Purpose: ☐ PROTOTYPE ☐ PRE-LAUNCH ■ MASSPRO			Revision No.:	0	Page No.:	1 of 4

PARTS:	1. Assy parts			JIG:	1. Assembly jig (Continuity test)
NO.	**PROCESS NAME**		**WORK PROCEDURE/ ILLUSTRATION**	**TOOLS/PPE**	**QUALITY POINTERS**
1	CLAMP ASSY	Table Lay-out	**Table Lay-out** 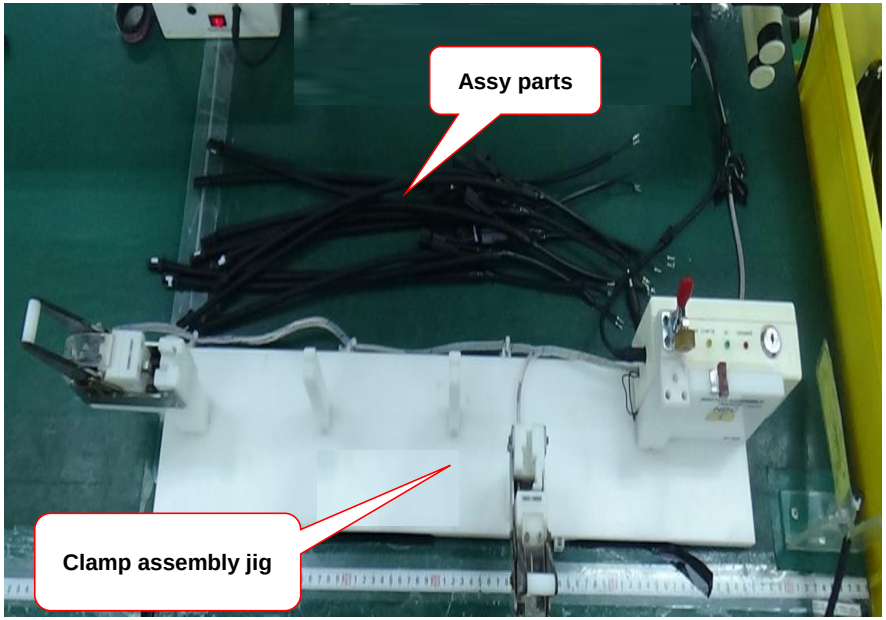 	**Safety Instruction** Be sure to wear prescribed personal protective equipment during operation (gloves, finger cots, etc.) **Housekeeping** 1. Maintain and always practice 5's. 2. Personal things on the workplace is prohibited. Keep it in your locker. **Alert level** For any trouble, inform the Assembly Assistant Supervisor or Line Leader for immediate corrective action.	***Document references:*** *1. Refer to WI-ENG-PDE-033A-B for Taping assembly process.* 1. No missing parts/tools 2. No excess parts/tools

Revision History							Prepared by	Reviewed by	Approved by	Noted by
06/18/24	0	Initial issue. Separate Continuity checking from P2 (WI-ENG-PDE-033B).	D.Castillo	C. Villanueva	A. Arañes	n/a	D. Castillo	C. Villanueva	A. Arañes	n/a
Eff. Date	Rev. No	Details of Change	Revised	Reviewed	Approved	Noted	Est. Date:	June 18, 2024		

CONFIDENTIAL: Any misuse or misappropriation, including unauthorized copying, reproduction in any form, disclosure or publishing of this document or any information herein is strictly prohibited.

NBC (Philippines)
MASTER COPY

DCC Stamp

	WORK INSTRUCTION			Effectivity Date:	June 18, 2024		
	Process Name/Title:	CLAMP ASSEMBLY PROCESS		Validity Date:	n/a		
	Model code/Part number: 310D / 7M0528-7020D	Customer: TRJ	Car Model: TOYOTA RAV4	Document No.:	WI-ENG-PDE-922		
	Purpose: ☐ PROTOTYPE ☐ PRE-LAUNCH ■ MASSPRO			Revision No.:	0	Page No.:	2 of 4

PARTS:	1. Assy parts			JIG:	1. Assembly jig (Continuity test)
NO.	**PROCESS NAME**		**WORK PROCEDURE/ ILLUSTRATION**	**TOOLS/PPE**	**QUALITY POINTERS**
2	CLAMP ASSY	Continuity testing			

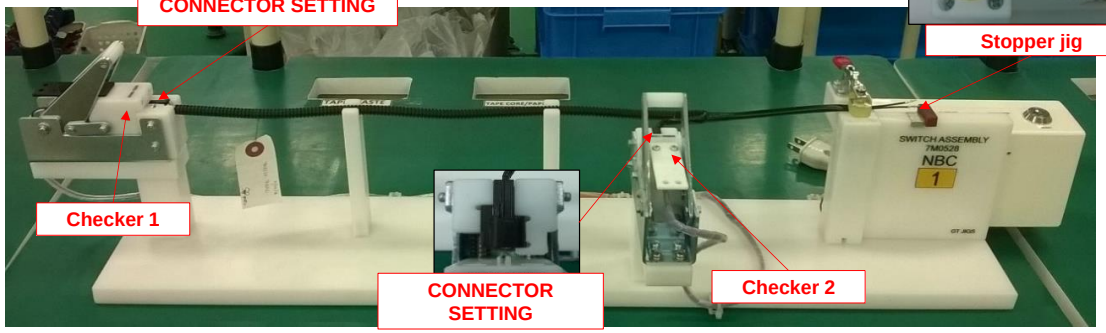

1. Get the assy parts and then put into jig. *(See above picture for correct setting).* First, set the connector **6098-6663 (B)** to **Checker 1** then pull the checker fixture for continuity checking. Continue to set the harness in jig. Second, set the connector **6098-3803 (B)** to **Checker 2** then pull the checker fixture for continuity checking. Last, set the **B/B wires** together within the stopper jig and then press by toggle clamp.

2. Check if all **LED light** for **POWER ON, WIRE1, WIRE2** was **ON**. If encountered abnormality, **STOP** and immediately **CALL** the attention of the leader. **WAIT** for further instruction and continue the process.

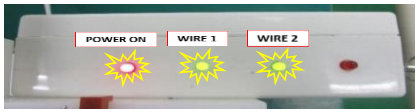

3. Go sound will be heard if testing was **GOOD.**

4. Conduct **POINT CHECKING** before removing the harness from jig.

Important reminders and note/s;

1.Make sure there's no clearance between terminal and stopper jig.
2.Terminals should touch the aluminum to check the continuity of black wires.

1. No wrong insertion of connector
2. Make sure no gap between terminal and stopper jig

CONFIDENTIAL: Any misuse or misappropriation, including unauthorized copying, reproduction in any form, disclosure or publishing of this document or any information herein is strictly prohibited.

NBC (Philippines)
MASTER COPY

DCC Stamp

	WORK INSTRUCTION			Effectivity Date:	June 18, 2024		
	Process Name/Title:	CLAMP ASSEMBLY PROCESS		Validity Date:	n/a		
	Model code/Part number: 310D / 7M0528-7020D	Customer: TRJ	Car Model: TOYOTA RAV4	Document No.:	WI-ENG-PDE-922		
	Purpose: ☐ PROTOTYPE ☐ PRE-LAUNCH ■ MASSPRO			Revision No.:	0	Page No.:	3 of 4

PARTS:	1. Assy parts	JIG:	n/a

NO.	PROCESS NAME		WORK PROCEDURE/ ILLUSTRATION	TOOLS/PPE	QUALITY POINTERS
3	CLAMP ASSY	Measurement	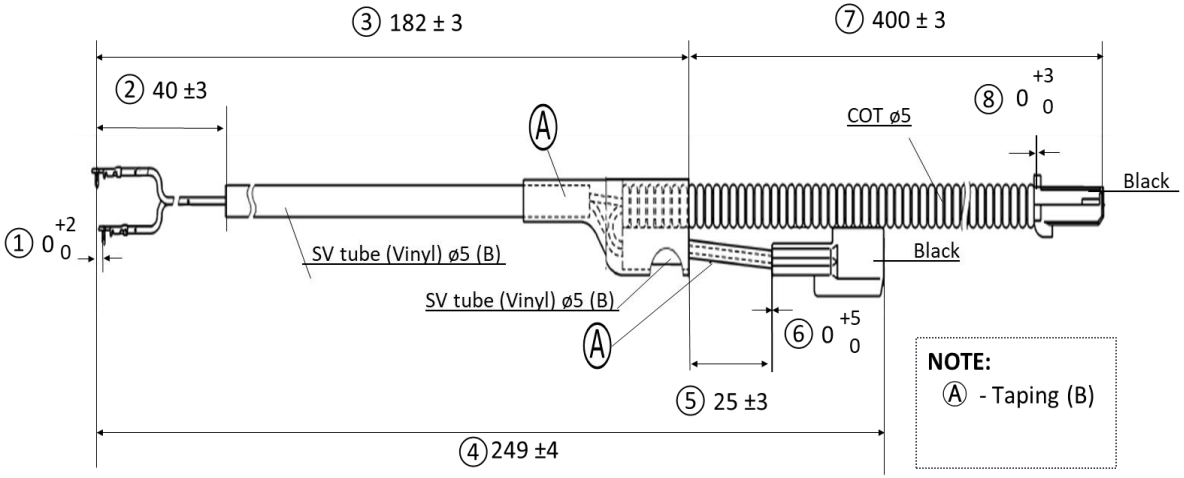	MEASURING TAPE	***Important reminders and note/s:*** ***1. Please use calibrated/verified measuring tape when getting the measurement.*** ***2. For Hatsumono, Nakamono and Owarimono.*** ***Document reference/s:*** *1. Refer to **WI-PRO-ASY-056** for Sub-assembly Hatsumono Nakamono Owarimono Inspection* 1. No wrong dimension

CONFIDENTIAL: Any misuse or misappropriation, including unauthorized copying, reproduction in any form, disclosure or publishing of this document or any information herein is strictly prohibited.

NBC (Philippines)
MASTER COPY

DCC Stamp

	WORK INSTRUCTION			Effectivity Date:	June 18, 2024		
	Process Name/Title:	CLAMP ASSEMBLY PROCESS		Validity Date:	n/a		
	Model code/Part number: 310D / 7M0528-7020D	Customer: TRJ	Car Model: TOYOTA RAV4	Document No.:	WI-ENG-PDE-922		
	Purpose: ☐ PROTOTYPE ☐ PRE-LAUNCH ■ MASSPRO			Revision No.:	0	Page No.:	4 of 4

PARTS:	1. Assy parts	JIG:	n/a

QUALITY CHECKPOINTS

CLAMP ASSY	7M0528-7020D

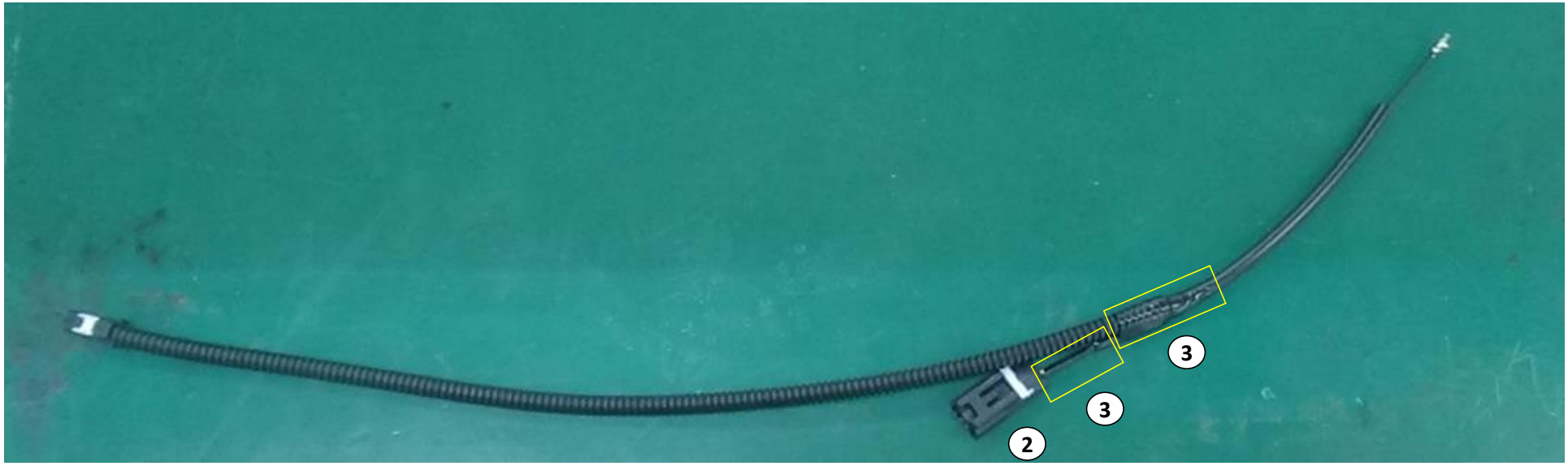

1 **No Terminal Backing Out**

2 **No Deformed Terminal**

3 **No Missing Tape**

CONFIDENTIAL: Any misuse or misappropriation, including unauthorized copying, reproduction in any form, disclosure or publishing of this document or any information herein is strictly prohibited.

NBC (Philippines)
MASTER COPY

DCC Stamp