NBC	WORK INSTRUCTION			Effectivity Date:	September 25, 2024
	Process Name/Title:	CLAMP ASSEMBLY PROCESS		Validity Date:	n/a
	Model code/Part number:	373D / 7N0173-7020	Customer: TRJ / Car Model: TOYOTA-RAV4	Document No.:	WI-ENG-PDE-1016
	Purpose:	☐ PROTOTYPE ☐ PRE-LAUNCH ■ MASSPRO		Revision No.:	0 / Page No.: 1 of 4

PARTS:	1. Assy parts			JIG:	1. Assembly jig
NO.	**PROCESS NAME**		**WORK PROCEDURE/ ILLUSTRATION**	**TOOLS/PPE**	**QUALITY POINTERS**
1	CLAMP ASSY	Table Lay-out	**Table Lay-out** 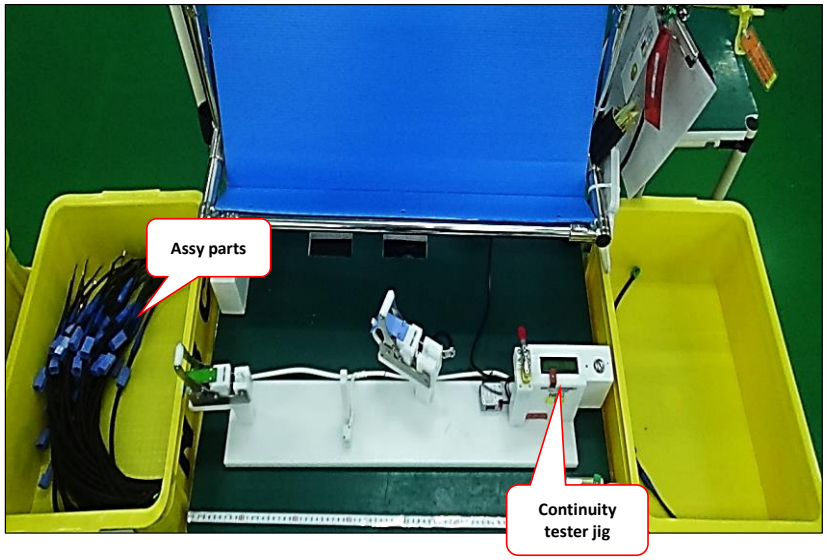 	**Safety Instruction** Be sure to wear required personal protective equipment during operation (gloves, finger cots, etc.) **Housekeeping** 1. Maintain and always practice 5's. 2. Personal things on the workplace is prohibited. Keep it in your locker. **Alert level** For any trouble, inform the Assembly Assistant Supervisor or Line Leader for immediate corrective action.	1. No missing parts/tools 2. No excess parts/tools

Revision History

Eff. Date	Rev. No	Details of Change	Revised	Reviewed	Approved	Noted
09/25/24	0	Initial issue	A.Hernandez	C. Villanueva	A. Arañes	n/a

Prepared by	Reviewed by	Approved by	Noted by
A.Hernandez	C. Villanueva	A. Arañes	n/a
Est. Date:	September 25, 2024		

CONFIDENTIAL: Any misuse or misappropriation, including unauthorized copying, reproduction in any form, disclosure or publishing of this document or any information herein is strictly prohibited.

NBC (Philippines)
MASTER COPY

DCC Stamp

	WORK INSTRUCTION			Effectivity Date:	September 25, 2024		
	Process Name/Title:	CLAMP ASSEMBLY PROCESS		Validity Date:	n/a		
	Model code/Part number:	373D / 7N0173-7020	Customer: TRJ	Car Model: TOYOTA-RAV4	Document No.:	WI-ENG-PDE-1016	
	Purpose:	☐ PROTOTYPE	☐ PRE-LAUNCH	■ MASSPRO	Revision No.:	0	Page No.: 2 of 4

PARTS:	1. Assy parts	JIG:	1. Assembly jig

NO.	PROCESS NAME		WORK PROCEDURE/ ILLUSTRATION	TOOLS/PPE	QUALITY POINTERS
2	CLAMP ASSY	Continuity tester jig	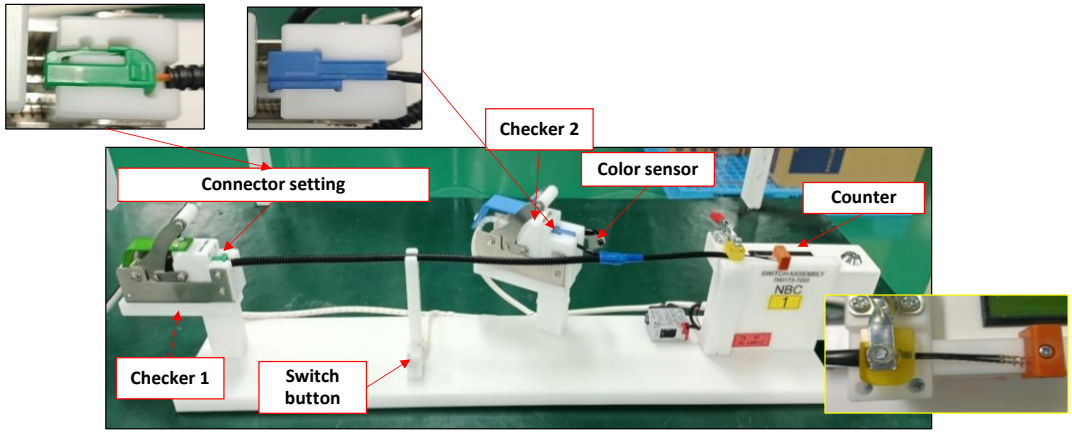 1. Get the assy parts then set into jig ***(See above illustration).*** First, set the **connector 7283-102060 (G)** to **Checker 1** then pull the checker ficture for continuity checking. Second, set the connector **6098-3871 (L)** to **Checker 2** then pull the checker ficture for continuity checking. Last, put the terminal into stopper jig then pull the toggle clamp using both hands. 2. Check in the counter if **Wire 1 and Wire 2** was **ON**. If encountered abnormality, **STOP** and immediately **CALL** the attention of the leader. **WAIT** for further instruction then continue the process. 3. If the **Color sensor** is **ON.** Press the SW button. **GO** buzzer will be heard. 4. Conduct **POINT CHECKING** before removal from jig. 		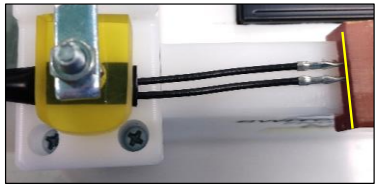 ***Important reminders/Note/s:*** ***1. Make sure no gap between stopper and terminals*** 1. No flip-out tape 2. No peel-off tape 3. No loose tape 4. No missing tape 5. No wrong dimension 6. No wrong use of tape

CONFIDENTIAL: Any misuse or misappropriation, including unauthorized copying, reproduction in any form, disclosure or publishing of this document or any information herein is strictly prohibited.

NBC (Philippines)
MASTER COPY

DCC Stamp

NBC	WORK INSTRUCTION			Effectivity Date:	September 25, 2024
	Process Name/Title:	CLAMP ASSEMBLY PROCESS		Validity Date:	n/a
	Model code/Part number:	373D / 7N0173-7020	Customer: TRJ / Car Model: TOYOTA-RAV4	Document No.:	WI-ENG-PDE-1016
	Purpose:	☐ PROTOTYPE ☐ PRE-LAUNCH ■ MASSPRO		Revision No.:	0 / Page No.: 3 of 4

PARTS:	1. Assy parts	JIG:	n/a

NO.	PROCESS NAME		WORK PROCEDURE/ ILLUSTRATION	TOOLS/PPE	QUALITY POINTERS
3	CLAMP ASSY	Measurement	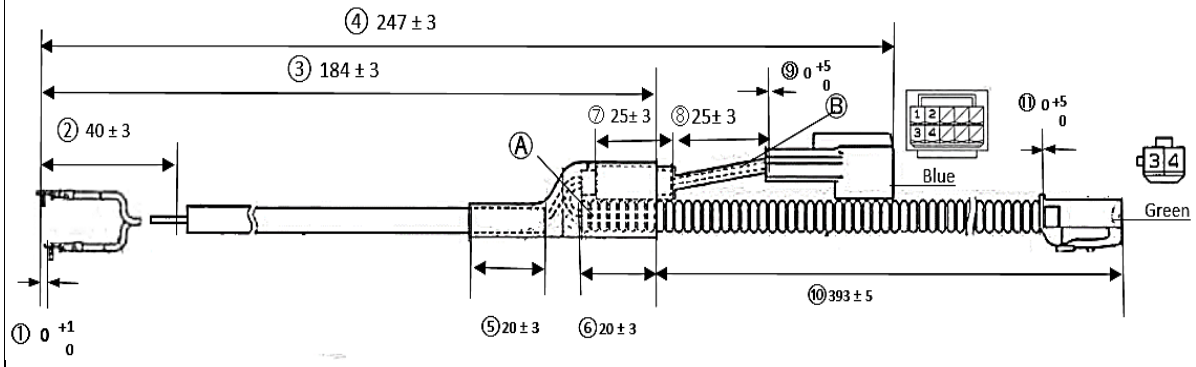		1. No wrong dimension MEASURING TAPE ***Important reminders/Note/s:*** ***1. FOR HATSUMONO AND OWARIMONO*** ***2. Please use calibrated/verified measuring tape when getting the measurement.***

CONFIDENTIAL: Any misuse or misappropriation, including unauthorized copying, reproduction in any form, disclosure or publishing of this document or any information herein is strictly prohibited.

NBC (Philippines)
MASTER COPY

DCC Stamp

NBC	WORK INSTRUCTION			Effectivity Date:	September 25, 2024
	Process Name/Title:	CLAMP ASSEMBLY PROCESS		Validity Date:	n/a
	Model code/Part number: 373D / 7N0173-7020	Customer: TRJ	Car Model: TOYOTA-RAV4	Document No.:	WI-ENG-PDE-1016
	Purpose: ☐ PROTOTYPE	☐ PRE-LAUNCH	■ MASSPRO	Revision No.: 0	Page No.: 4 of 4

PARTS:	1. Assy parts	JIG:	n/a

VISUAL INSPECTION/QUALITY CHECKPOINTS

CLAMP ASSY 7N0173-7020

1 **Check the Harness Appearance**

2 **No Lacking/Excess of Harness**

CONFIDENTIAL: Any misuse or misappropriation, including unauthorized copying, reproduction in any form, disclosure or publishing of this document or any information herein is strictly prohibited.

NBC (Philippines)
MASTER COPY

DCC Stamp