Multidisciplinary Engineering Technology
COLLEGE OF ENGINEERING

MXET 300: Mechatronics I

# Birthday Massacre
# SCUTTLE Laser Turret

**Section #503 - Group #7**
**Tharshini Subash, Parker White, Javier Briceno Rodriguez, Abigail Dickinson**

# Overall Project Description

- The SCUTTLE will be equipped with obstacle avoidance capabilities.
- It will have color based circular balloon detection.
- It selectively targets a specific color avoiding others.
- Upon detecting the color the SCUTTLE moves toward it and activates a laser to hit the balloon.

# Obstacle Avoidance

- Continuous Movement Logic
  - SCUTTLE moves forward by default.
  - Stops and reacts only when an obstacle is detected.
- 270° LiDAR Scanning
  - Captures ~100 distance-angle points per scan.
  - Divides field into Left, Center, and Right zones.
- Zone-Based Decision Logic
  - Averages distance in each zone.
  - Compares against a predefined safety threshold (0.25m).
  - Turns in the direction with the most clearance.
- Stuck Detection & Recovery
  - Compares current and previous scans.
  - If position is unchanged, SCUTTLE reverses and turns to regain mobility.

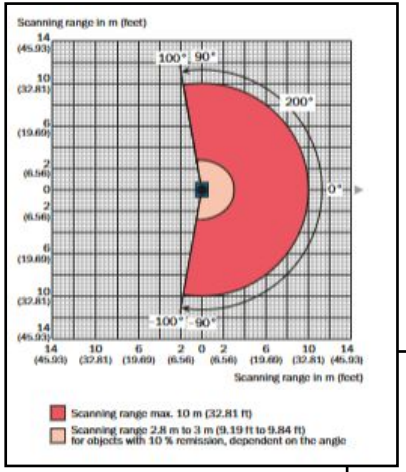


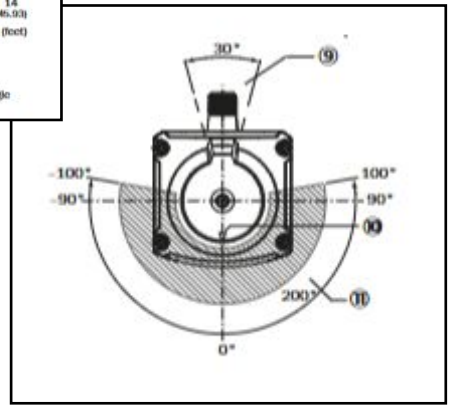

# Software Description

- We used a standard HP USB webcam to capture real-time video frames.
- The frames are processed using OpenCV in Python, where each frame is converted to HSV color space.
- Color masking is applied to detect specific balloon colors while a hough circle transform is used to reduce false positives by removing non circular objects not filtered out by the color mask.
- Once a balloon is detected, its center coordinates are calculated.
- Using a two-servo pan-tilt mechanism, the system repositions the camera so the balloon is centered in the frame.
- When the balloon is within the center tolerance, the laser —aligned with the camera—is triggered to pop the balloon.

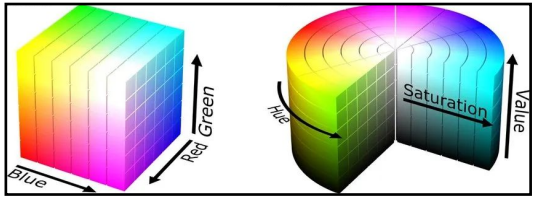


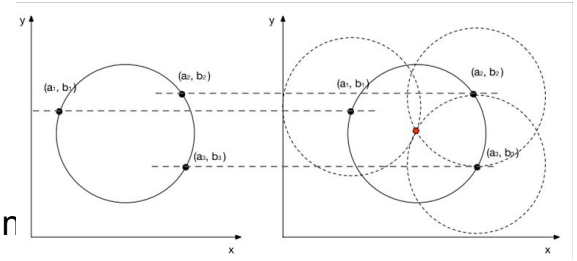


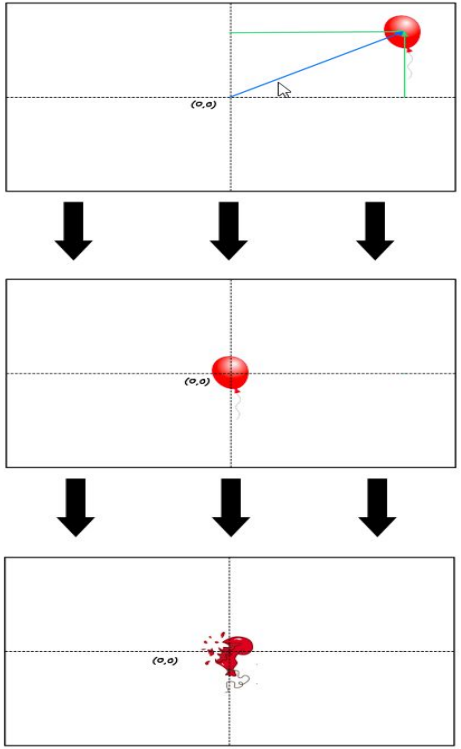

# Software Architecture

Raspberry Pi

L3_Camera_Tracking.py

L2_Color_Detection.py
L2_Tracking_Config.py
L2_PID_Controller.py
L2_Telemetry.py

L1_Camera_Handler.py
L1_Servo_Controller.py
L1_log.py

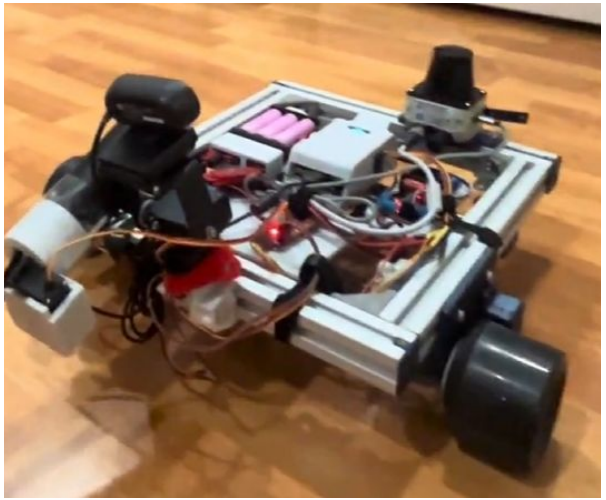

L3_obstacle_avoidance.py

L2_inverse_kinematics.py
L2_speed_control.py
L2_Tracking_Config.py
L2_vector.py

L1_lidar.py
L1_motor.py

# Hardware Mechanisms

- The laser mechanism is a Class III laser that pops balloons with a power output of 300 mW.
- The laser and camera are mounted on the same bracket with the laser being housed by a 3D printed mount.
- This mount screws onto the gimbal bracket and the end cap is friction fit using tight interference.
- A servo motor was attached to the back of the laser mount to turn the laser on and off when the tracking recognized a target.
- This servo motor triggers the on button for laser with the motion of the servo at a specific angle.
- The gimbal is a two-axis gimbal that centers the camera and laser device through USB-connection.

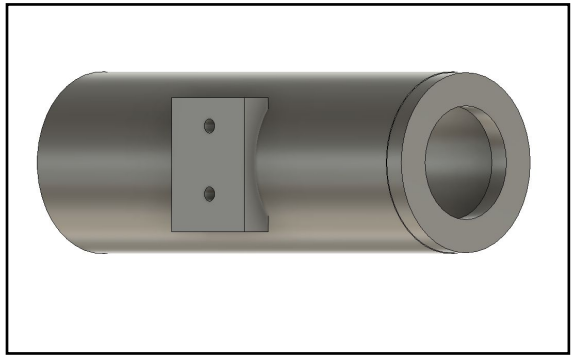

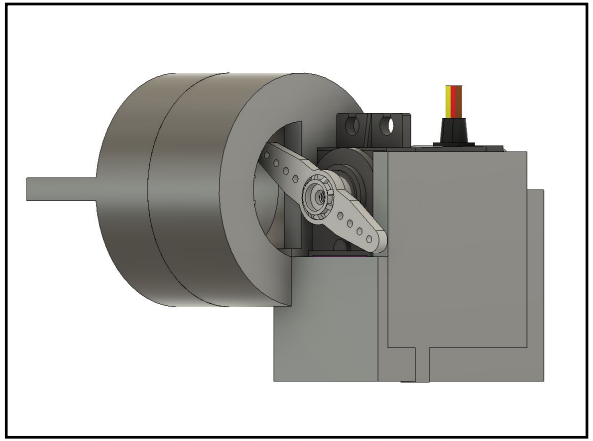

# Distribution of Work

| Name | Assignments |
|---|---|
| Tharshini Subash | 1.Obstacle Avoidance |
| | 2.Balloon Detection and Training the module |
| | 3.Integration |
| Javier Briceno Rodriguez | 1.Balloon Detection and Training the module |
| | 2.Assemble all the parts together. |
| | 3.Servo motors for gimbaling |
| Abigail Dickinson | 1.Moving towards the target |
| | 2.Targeting and Shooting Mechanism |
| | 3.Integration |
| Parker White | 1. Design the turret shooting mechanism |
| | 2. Design and fabricate Turret |
| | 3. Gimbal |

# Links

- Presentation link: https://youtu.be/XbWgDifCZ-U