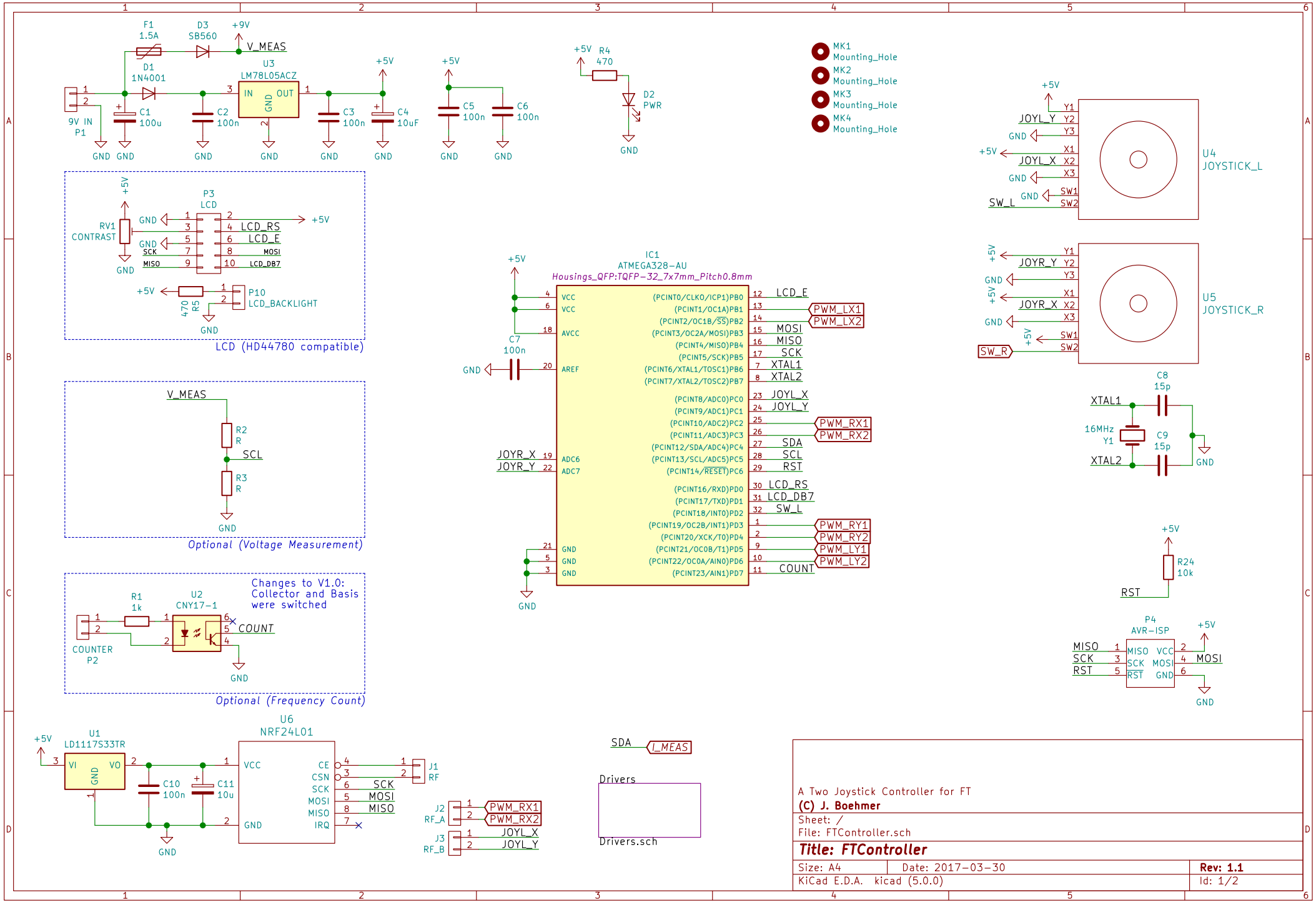
F1
1.5A
D3
SB560
+9V
V_MEAS
D1
1N4001
U3
LM78L05ACZ
IN
OUT
GND
9V IN
P1
C1
100u
C2
100n
C3
100n
C4
10uF
C5
100n
C6
100n
R4
470
D2
PWR
MK1
Mounting_Hole
MK2
Mounting_Hole
MK3
Mounting_Hole
MK4
Mounting_Hole
U4
JOYSTICK_L
JOYL_Y
JOYL_X
SW_L
U5
JOYSTICK_R
JOYR_Y
JOYR_X
SW_R
P3
LCD
RV1
CONTRAST
LCD_RS
LCD_E
SCK
MOSI
MISO
LCD_DB7
P10
LCD_BACKLIGHT
R5
470
LCD (HD44780 compatible)
IC1
ATMEGA328-AU
Housings_QFP:TQFP-32_7x7mm_Pitch0.8mm
C7
100n
(PCINT0/CLKO/ICP1)PB0
(PCINT1/OC1A)PB1
(PCINT2/OC1B/SS)PB2
(PCINT3/OC2A/MOSI)PB3
(PCINT4/MISO)PB4
(PCINT5/SCK)PB5
(PCINT6/XTAL1/TOSC1)PB6
(PCINT7/XTAL2/TOSC2)PB7
(PCINT8/ADC0)PC0
(PCINT9/ADC1)PC1
(PCINT10/ADC2)PC2
(PCINT11/ADC3)PC3
(PCINT12/SDA/ADC4)PC4
(PCINT13/SCL/ADC5)PC5
(PCINT14/RESET)PC6
(PCINT16/RXD)PD0
(PCINT17/TXD)PD1
(PCINT18/INT0)PD2
(PCINT19/OC2B/INT1)PD3
(PCINT20/XCK/T0)PD4
(PCINT21/OC0B/T1)PD5
(PCINT22/OC0A/AIN0)PD6
(PCINT23/AIN1)PD7
PWM_LX1
PWM_LX2
PWM_RX1
PWM_RX2
PWM_RY1
PWM_RY2
PWM_LY1
PWM_LY2
COUNT
XTAL1
XTAL2
C8
15p
C9
15p
16MHz
Y1
R24
10k
RST
P4
AVR-ISP
MISO
SCK
MOSI
V_MEAS
R2
R
R3
R
SCL
Optional (Voltage Measurement)
Changes to V1.0:
Collector and Basis
were switched
R1
1k
U2
CNY17-1
COUNTER
P2
Optional (Frequency Count)
U1
LD1117S33TR
VI
VO
C10
100n
C11
10u
U6
NRF24L01
VCC
CE
CSN
IRQ
J1
RF
J2
RF_A
J3
RF_B
SDA
I_MEAS
Drivers
Drivers.sch
A Two Joystick Controller for FT
(C) J. Boehmer
Sheet: /
File: FTController.sch
Title: FTController
Size: A4
Date: 2017-03-30
Rev: 1.1
KiCad E.D.A. kicad (5.0.0)
Id: 1/2

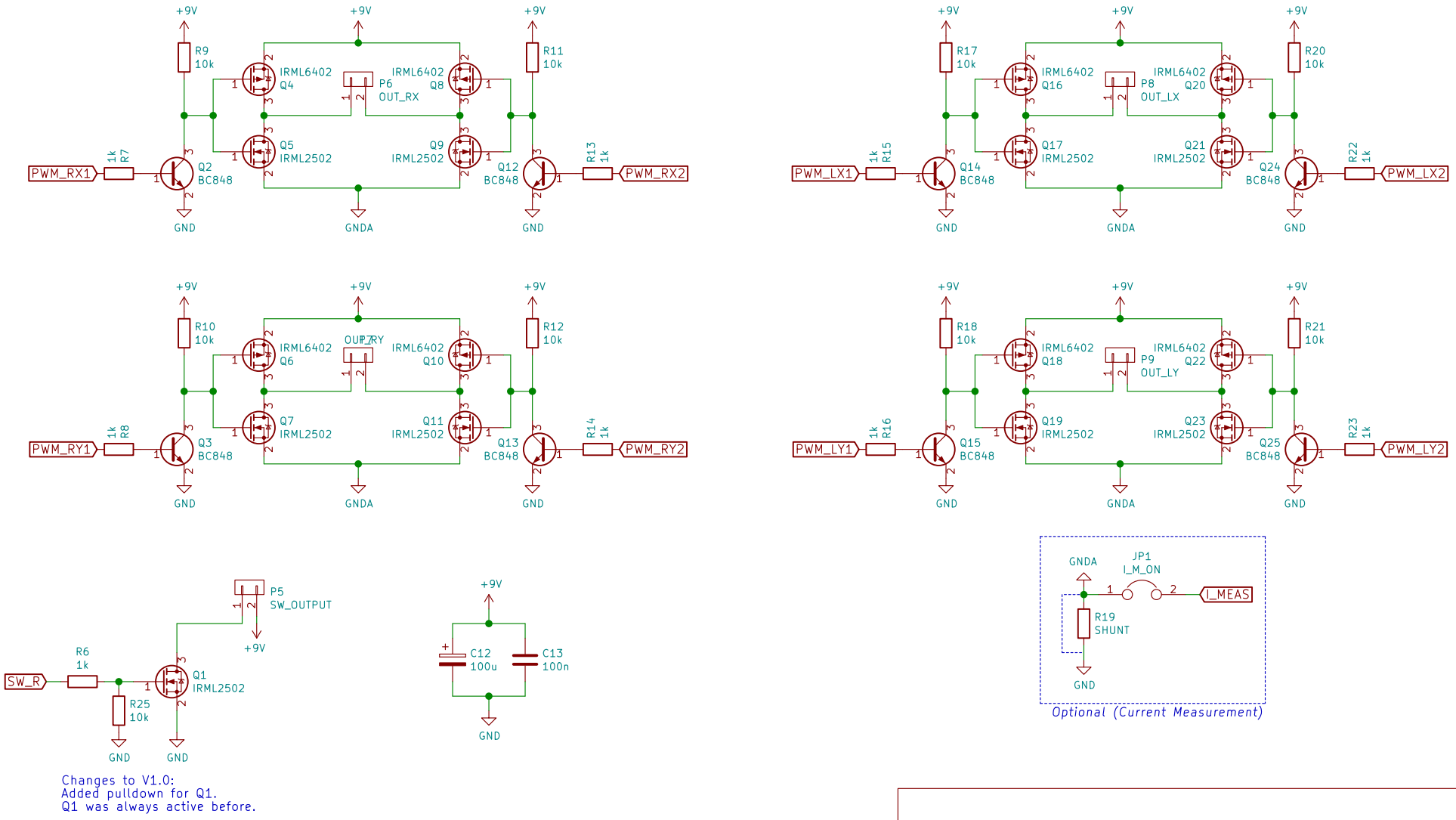

Changes to V1.0:
Added pulldown for Q1.
Q1 was always active before.

(C) J. Boehmer

Sheet: /Drivers/
File: Drivers.sch

Title: FTController

Size: A4	Date: 2017-03-30	Rev: 1.1
KiCad E.D.A. kicad (5.0.0)		Id: 2/2