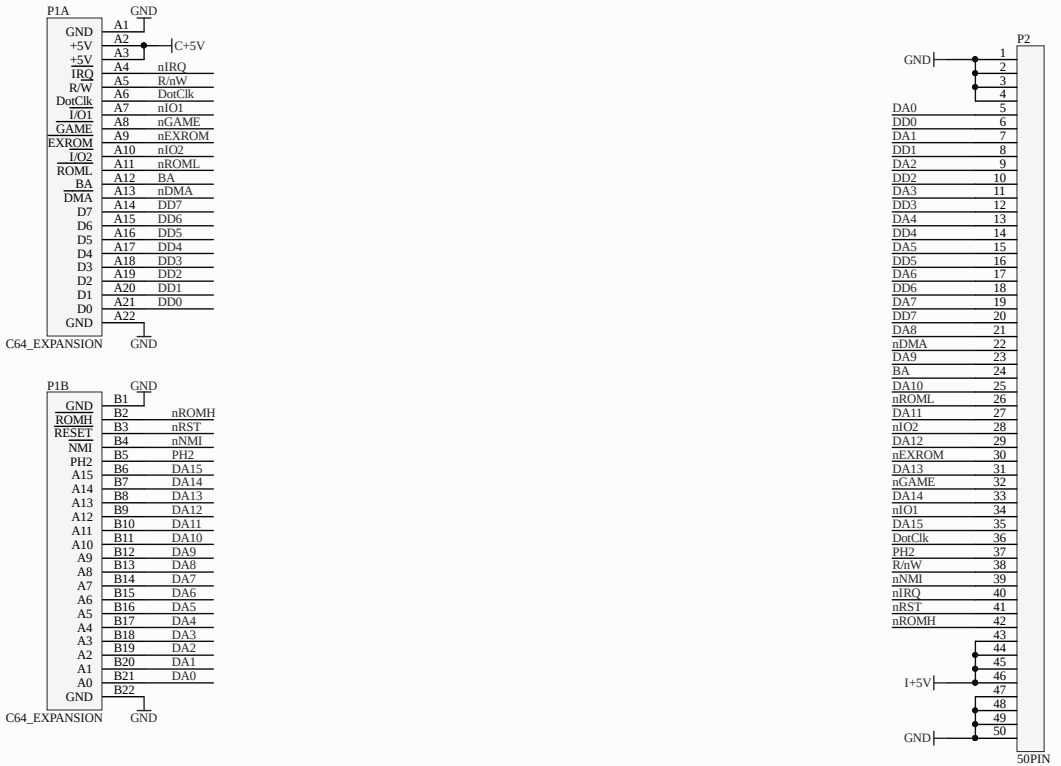

Title		
Size: B	Number	Revision
Date: 5/29/2020		Sheet of
File: E:\GitRepositories\..\C64_ITFC_X .SchDoc		Drawn By:

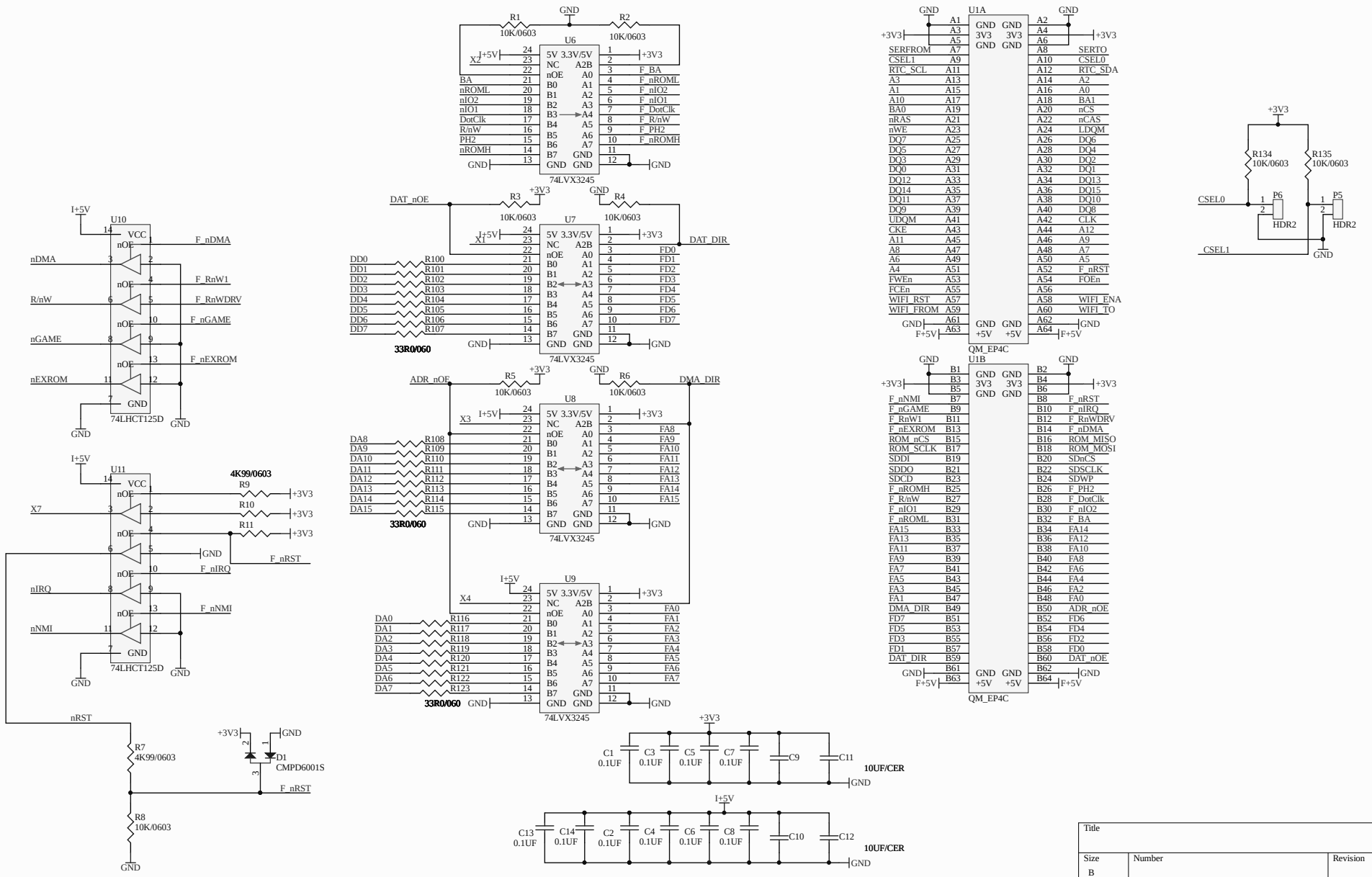

Title		
Size: B	Number	Revision
Date: 5/29/2020	Sheet of	
File: E:\GitRepositories\..\DE1_SIDE_SDRAM_Board....	Drawn By:	

U_C64_ITFC_X
C64_ITFC_X .SchDoc

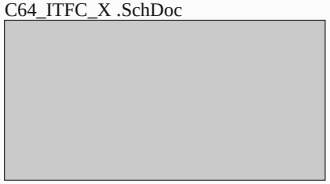

U_DE1_SIDE
DE1_SIDE_SDRAM.schdoc

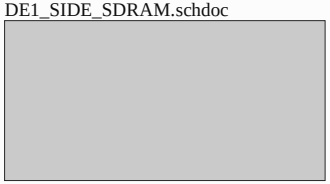

U_Memory
Memory.SchDoc

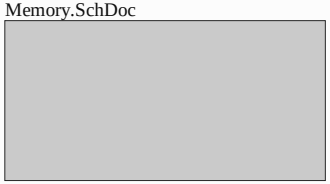

U_Comms
Comms.SchDoc

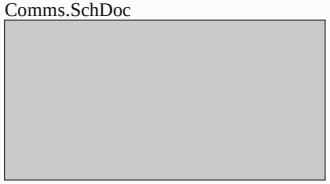

Title			
Size A	Number		Revision
Date:	5/29/2020	Sheet of	
File:	E:\GitRepositories\..\C64IntfcTop.SchDoc	Drawn By:	

USB Serial Port

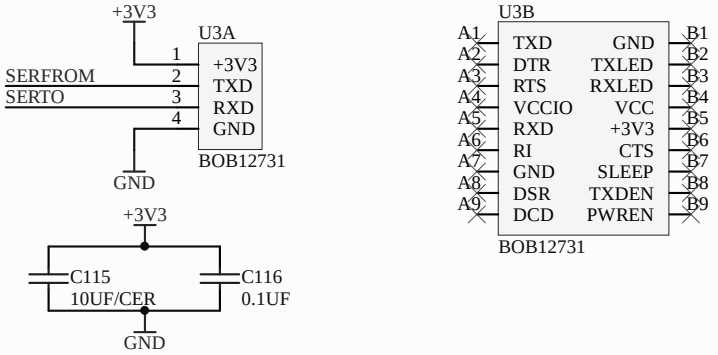

Wifi Module

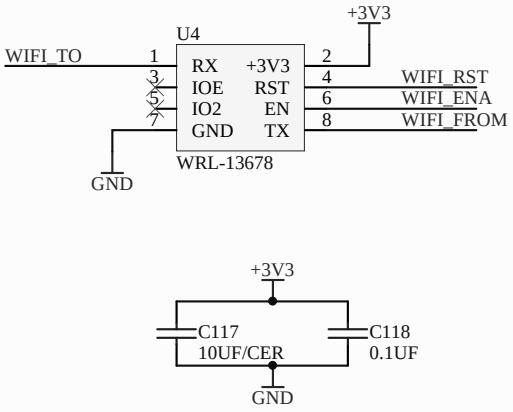

RTC

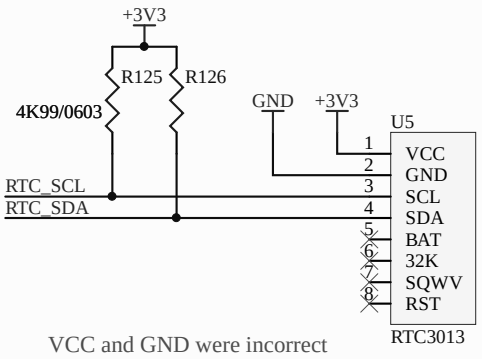

VCC and GND were incorrect

SD Card

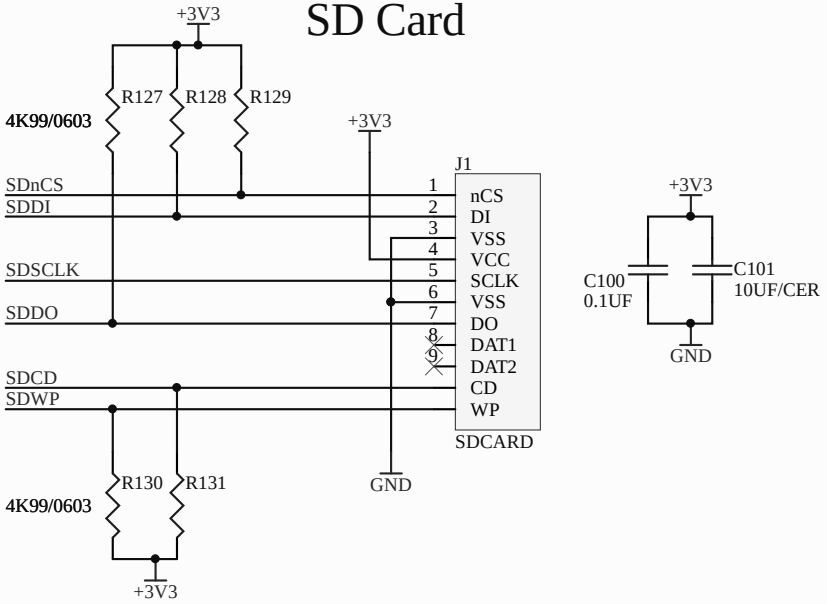

Title		
Size: A	Number:	Revision:
Date: 5/29/2020		Sheet of
File: E:\GitRepositories\..\Comms.SchDoc		Drawn By:

Secondary SRAM

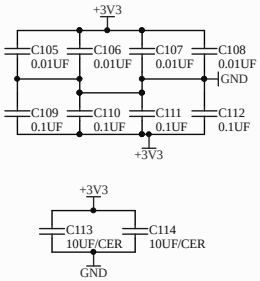

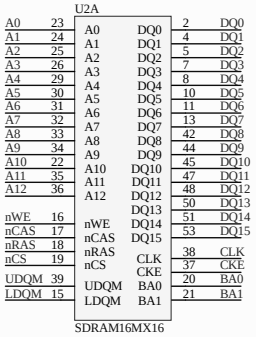

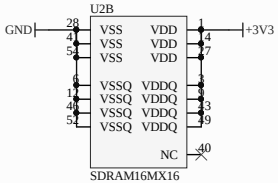

SPI Flash Mass Storage

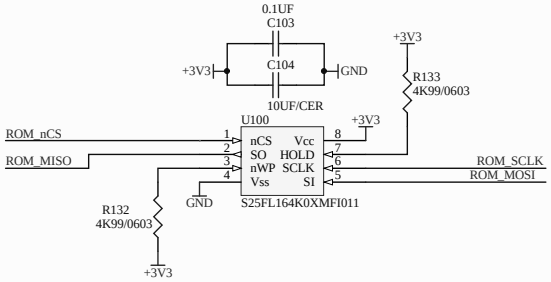

MAC Address

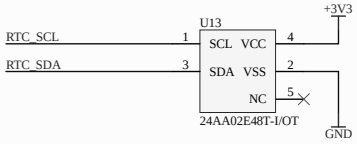

Title		
Size: B	Number	Revision
Date: 5/29/2020		Sheet of
File: E:\GitRepositories\..\Memory.SchDoc		Drawn By:

Bottom Layer

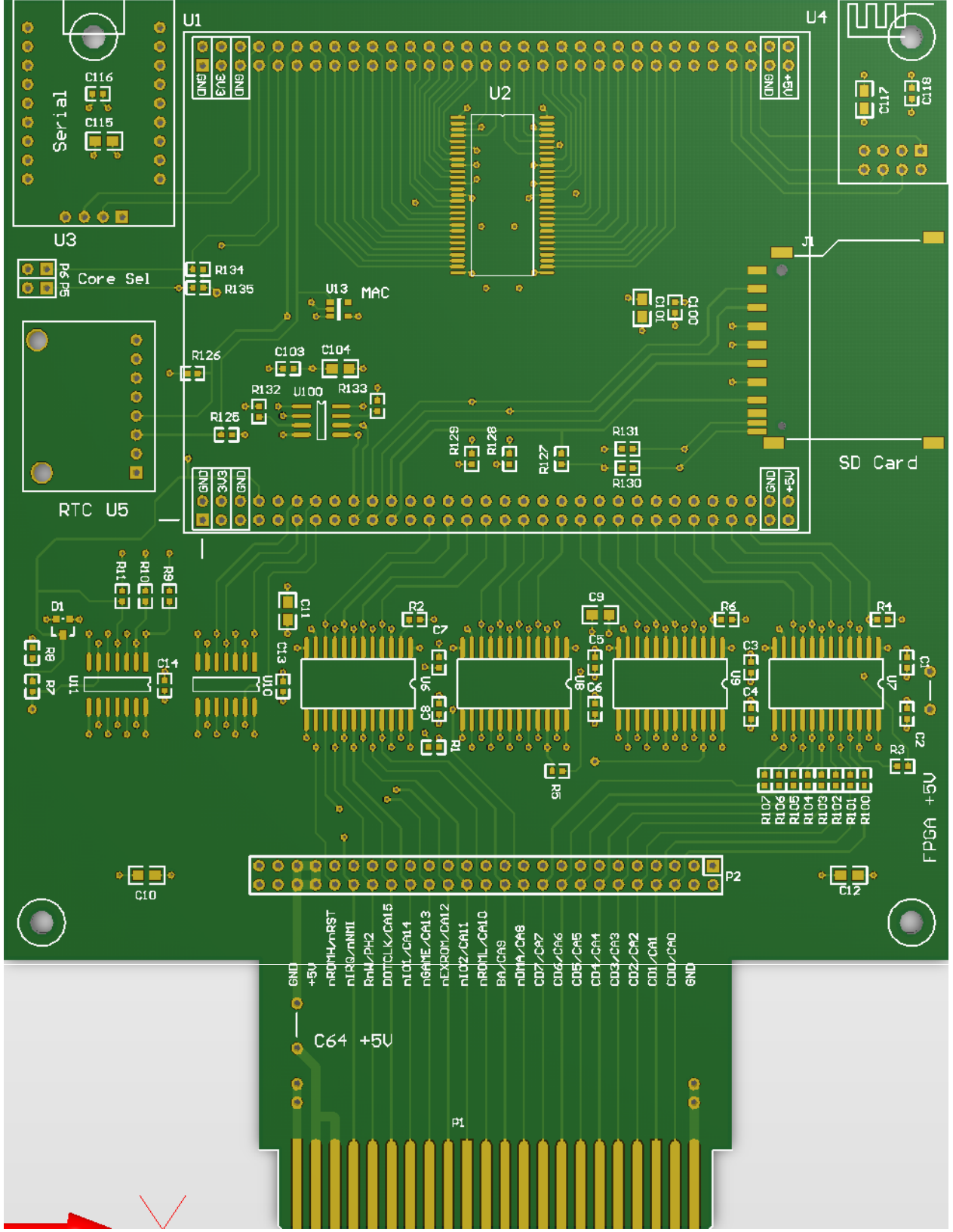
U1
U2
U3
U4
U5
Serial
C116
C115
Core Sel
P6
P5
R134
R135
U13
MAC
R126
C103
C104
R132
U100
R133
R125
R129
R128
R127
R131
R130
J1
SD Card
C101
C100
C117
C118
RTC U5
GND
3V3
+5V
R11
R10
R9
D1
R8
R7
U11
C14
U10
C13
C11
R2
C7
U6
C8
R1
R5
C9
C5
U8
C6
R6
C3
U9
C4
R4
U7
C1
C2
R3
R107
R106
R105
R104
R103
R102
R101
R100
FPGA +5V
C10
P2
C12
GND
+5V
nROMH/nRST
nIRQ/nNMI
RnW/PH2
DOTCLK/CA15
nIO1/CA14
nGAME/CA13
nEXROM/CA12
nIO2/CA11
nROML/CA10
BA/CA9
nDMA/CA8
CD7/CA7
CD6/CA6
CD5/CA5
CD4/CA4
CD3/CA3
CD2/CA2
CD1/CA1
CD0/CA0
GND
C64 +5V
P1

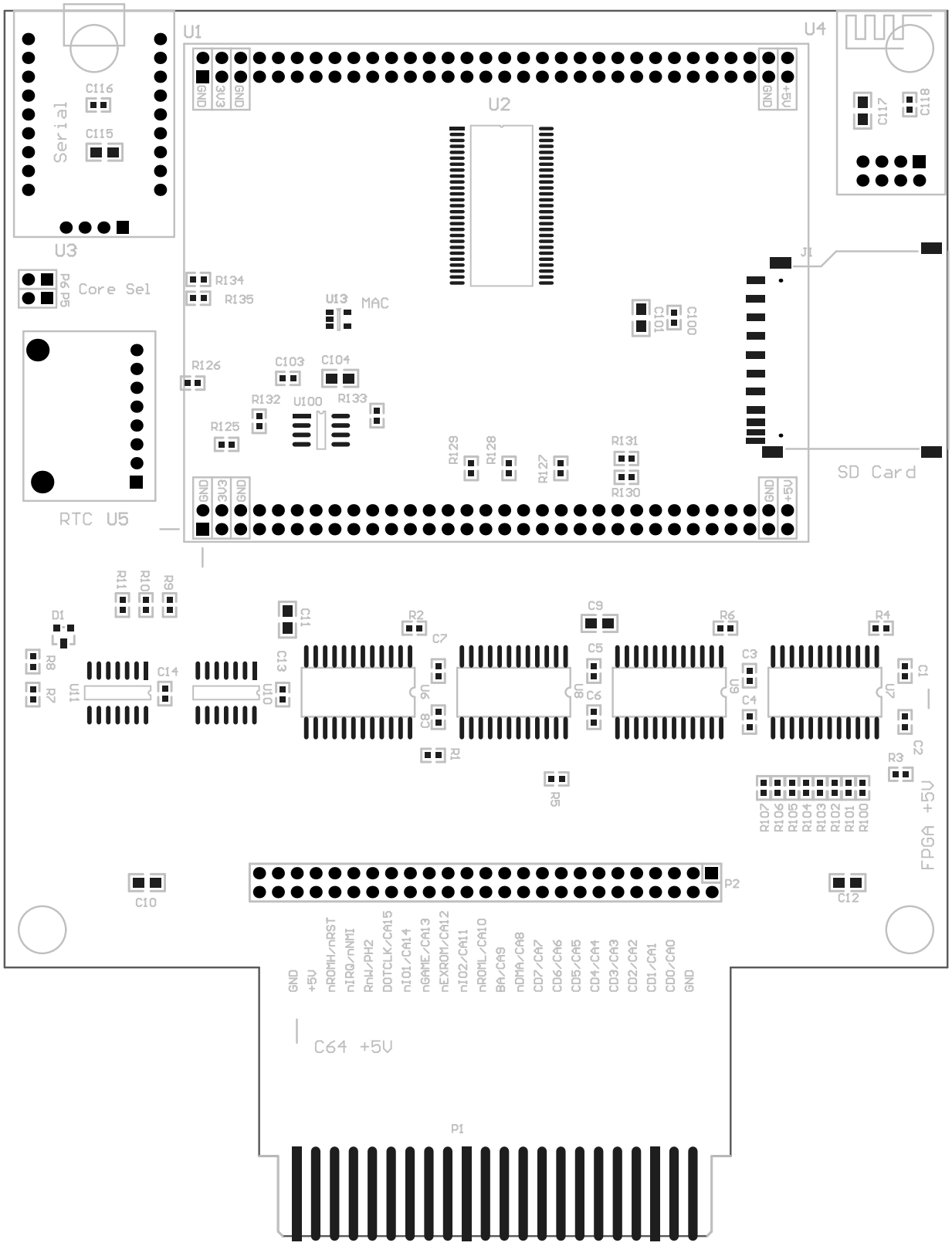
U1
U2
U3
U4
Serial
C116
C115
Core Sel
P6
P5
RTC U5
R134
R135
U13
MAC
R126
C103
C104
R132
U100
R133
R125
R129
R128
R127
R131
R130
C101
C100
J1
SD Card
C117
C118
GND
3V3
+5V
R11
R10
R9
D1
R8
R7
U11
C14
C13
U10
C11
R2
C7
U6
C8
R1
C9
C5
U8
C6
R6
C3
U9
C4
R4
U7
C1
C2
R3
R5
R107
R106
R105
R104
R103
R102
R101
R100
FPGA +5V
C10
P2
C12
GND
+5V
nROMH/nRST
nIRQ/nNMI
RnW/PH2
DOTCLK/CA15
nIO1/CA14
nGAME/CA13
nEXROM/CA12
nIO2/CA11
nROML/CA10
BA/CA9
nDMA/CA8
CD7/CA7
CD6/CA6
CD5/CA5
CD4/CA4
CD3/CA3
CD2/CA2
CD1/CA1
CD0/CA0
GND
C64 +5V
P1

Top Overlay

Bottom Overlay