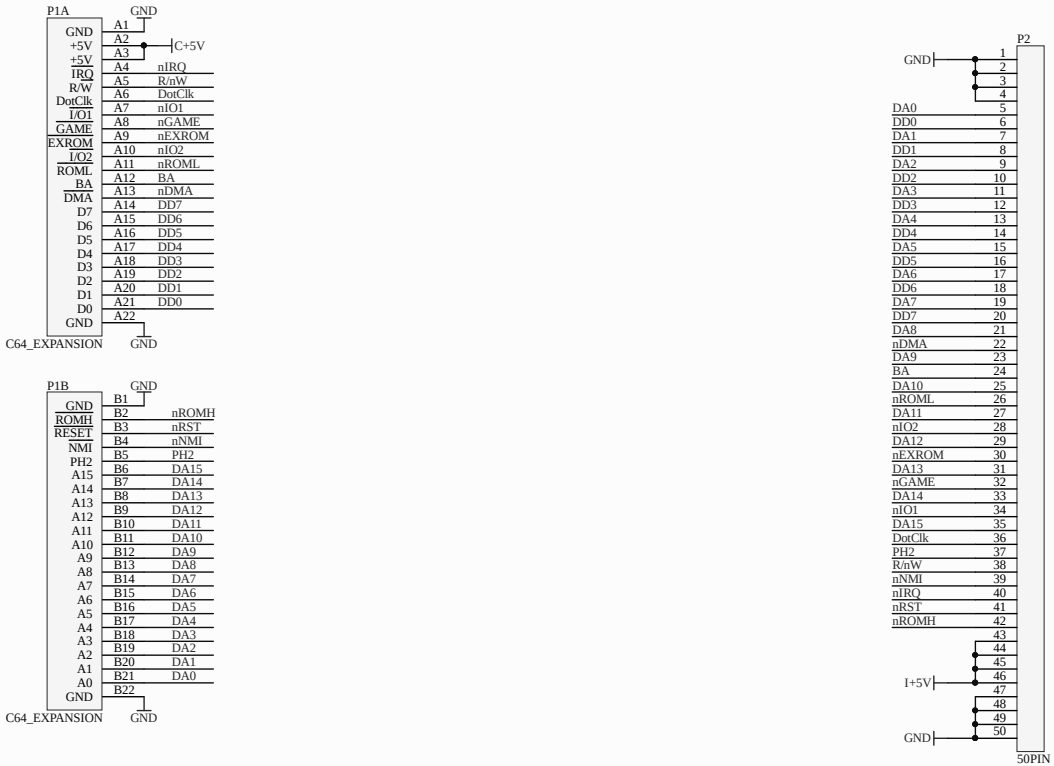

Title		
Size: B	Number:	Revision:
Date: 5/30/2020		Sheet of
File: E:\GitRepositories\..\C64_ITFC_X .SchDoc		Drawn By:

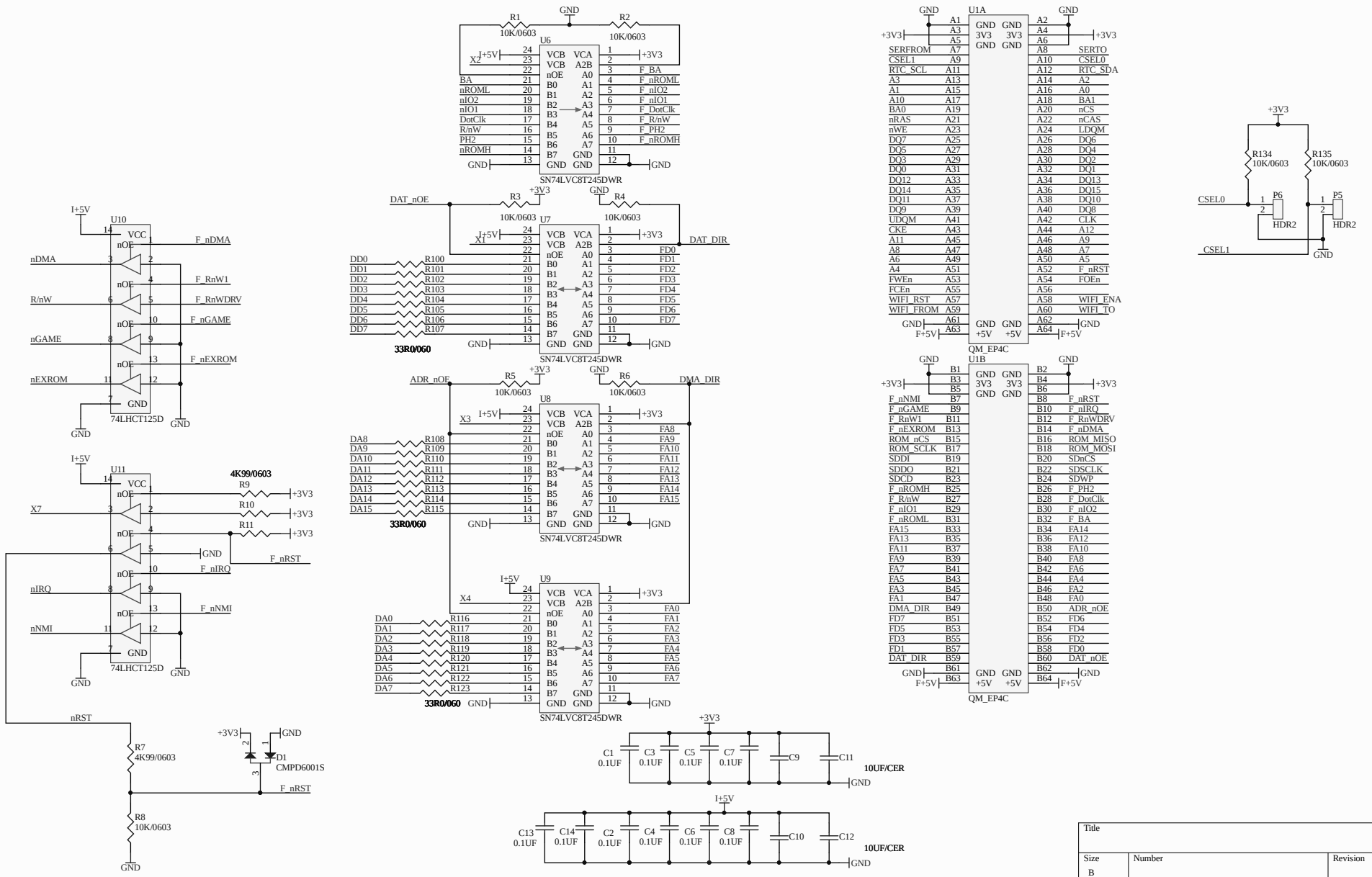
U10
74LHCT125D
F_nDMA
nDMA
F_RnW1
R/nW
F_RnWDRV
F_nGAME
nGAME
F_nEXROM
nEXROM
U11
74LHCT125D
4K99/0603
R9
R10
R11
F_nRST
F_nIRQ
nIRQ
F_nNMI
nNMI
nRST
R7
4K99/0603
D1
CMPD6001S
R8
10K/0603
U6
SN74LVC8T245DWR
R1
R2
10K/0603
X2
BA
nROML
nIO2
nIO1
DotClk
R/nW
PH2
nROMH
F_BA
F_nROML
F_nIO2
F_nIO1
F_DotClk
F_R/nW
F_PH2
F_nROMH
U7
R3
R4
X1
DAT_nOE
DAT_DIR
DD0
DD1
DD2
DD3
DD4
DD5
DD6
DD7
R100
R101
R102
R103
R104
R105
R106
R107
33R0/060
FD0
FD1
FD2
FD3
FD4
FD5
FD6
FD7
U8
R5
R6
X3
ADR_nOE
DMA_DIR
DA8
DA9
DA10
DA11
DA12
DA13
DA14
DA15
R108
R109
R110
R111
R112
R113
R114
R115
FA8
FA9
FA10
FA11
FA12
FA13
FA14
FA15
U9
X4
DA0
DA1
DA2
DA3
DA4
DA5
DA6
DA7
R116
R117
R118
R119
R120
R121
R122
R123
FA0
FA1
FA2
FA3
FA4
FA5
FA6
FA7
C1
C3
C5
C7
C9
C11
0.1UF
10UF/CER
C13
C14
C2
C4
C6
C8
C10
C12
U1A
QM_EP4C
SERFROM
CSEL1
RTC_SCL
A3
A1
A10
BA0
nRAS
nWE
DQ7
DQ5
DQ3
DQ0
DQ12
DQ14
DQ11
DQ9
UDQM
CKE
A11
A8
A6
A4
FWEn
FCEn
WIFI_RST
WIFI_FROM
SERTO
CSEL0
RTC_SDA
A2
A0
BA1
nCS
nCAS
LDQM
DQ6
DQ4
DQ2
DQ1
DQ13
DQ15
DQ10
DQ8
CLK
A12
A9
A7
F_nRST
FOEn
WIFI_ENA
WIFI_TO
U1B
F_nNMI
F_nGAME
F_RnW1
F_nEXROM
ROM_nCS
ROM_SCLK
SDDI
SDDO
SDCD
F_nROMH
F_R/nW
F_nIO1
F_nROML
FA15
FA13
FA11
FA9
FA7
FA5
FA3
FA1
DMA_DIR
FD7
FD5
FD3
FD1
DAT_DIR
F_nRST
F_nIRQ
F_nNMI
ROM_MISO
ROM_MOSI
SDnCS
SDSCLK
SDWP
F_DotClk
F_BA
FA14
FA12
FA10
FA8
FA6
FA4
FA2
FA0
ADR_nOE
FD6
FD4
FD2
FD0
DAT_nOE
R134
10K/0603
R135
10K/0603
P6
P5
HDR2
CSEL0
CSEL1
Title
Size
B
Number
Revision
Date:
5/30/2020
Sheet of
File:
E:\GitRepositories\..\DE1_SIDE_SDRAM.SchDoc
Drawn By:

U_C64_ITFC_X
C64_ITFC_X .SchDoc

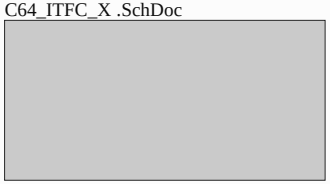

U_DE1_SIDE
DE1_SIDE_SDRAM.schdoc

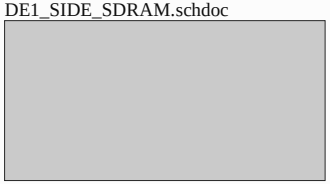

U_Memory
Memory.SchDoc

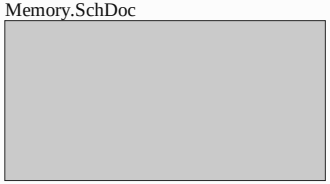

U_Comms
Comms.SchDoc

Title		
Size A	Number	Revision
Date: 5/30/2020		Sheet of
File: E:\GitRepositories\..\C64IntfcTop.SchDoc		Drawn By:

USB Serial Port

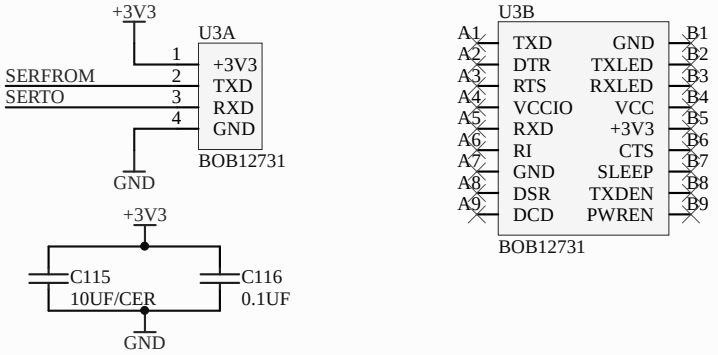

Wifi Module

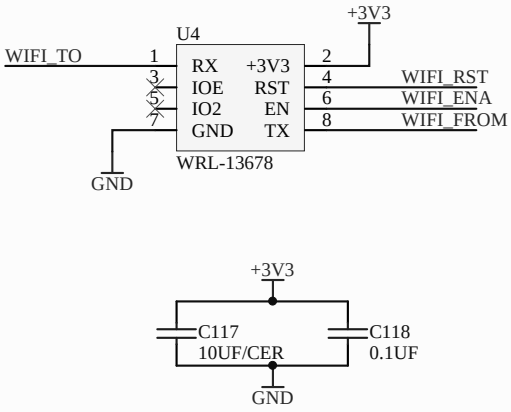

RTC

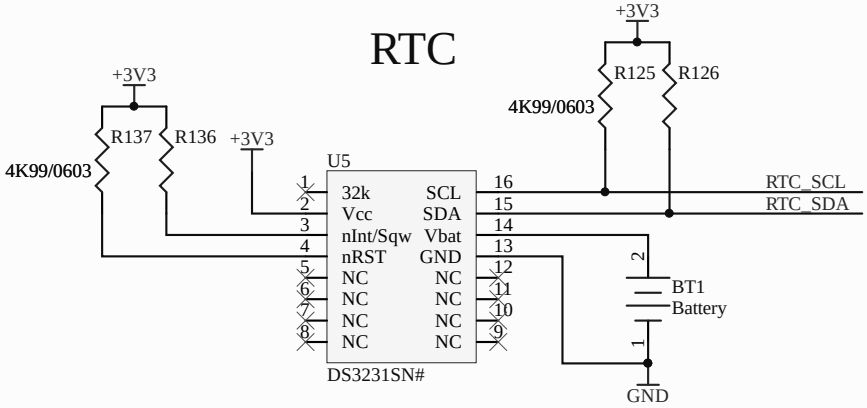

SD Card

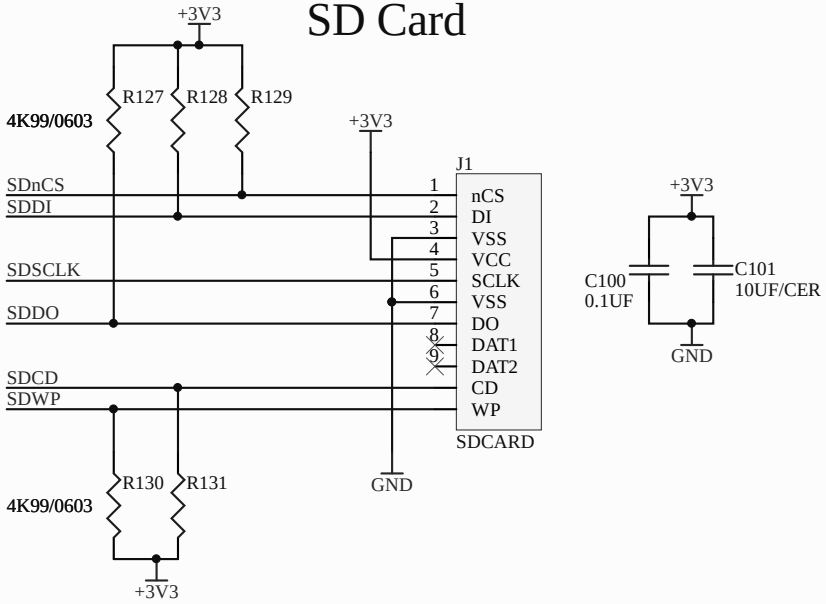

Title		
Size: A	Number:	Revision:
Date: 5/30/2020		Sheet of
File: E:\GitRepositories\..\Comms.SchDoc		Drawn By:

Secondary SRAM

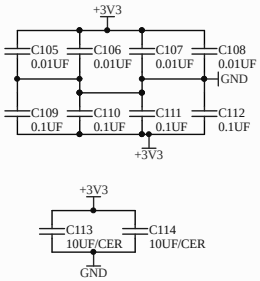

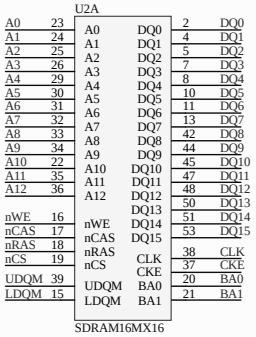

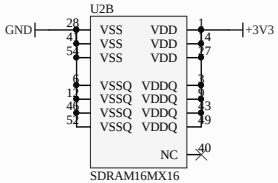

SPI Flash Mass Storage

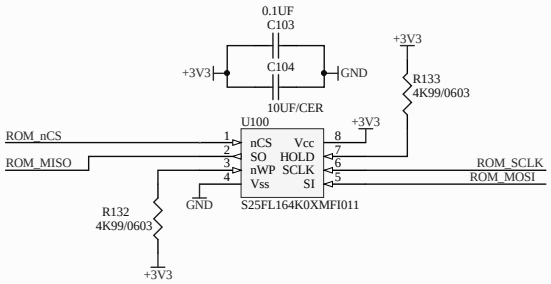

MAC Address

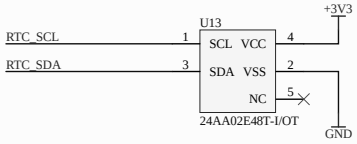

Title		
Size: B	Number	Revision
Date: 5/30/2020		Sheet of
File: E:\GitRepositories\..\Memory.SchDoc		Drawn By:

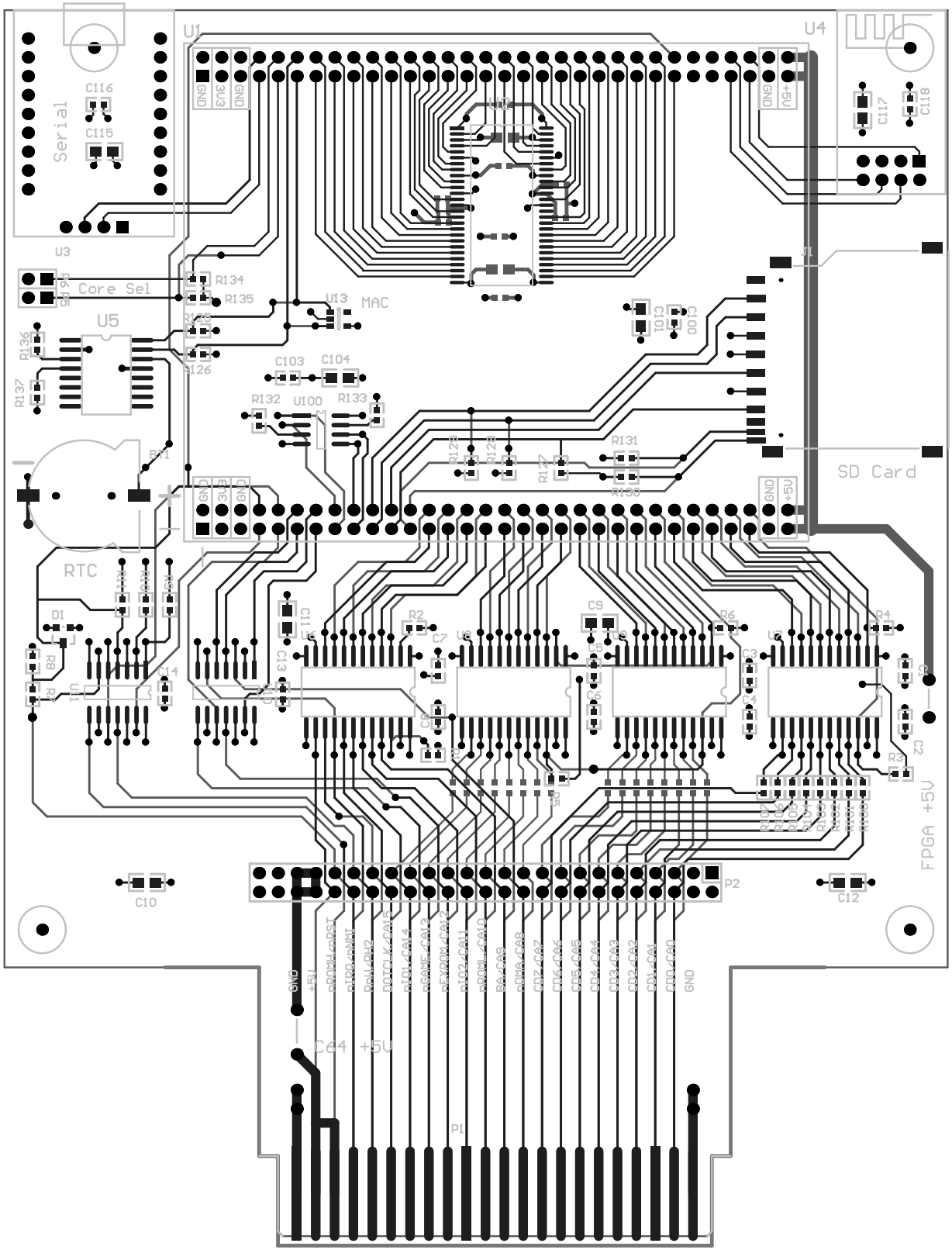

Bottom Layer

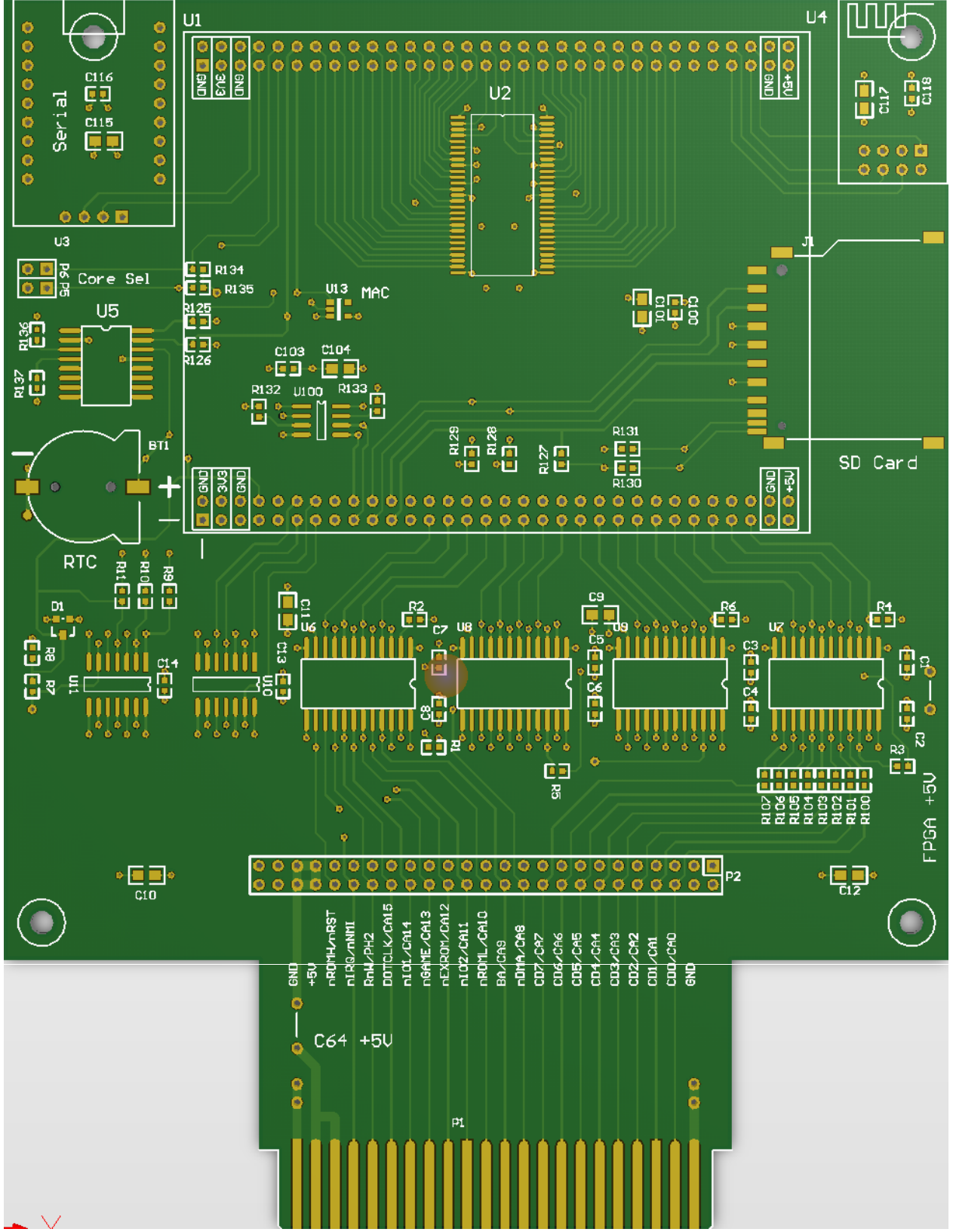
U1
U2
U4
U3
U5
U6
U7
U8
U9
U10
U11
U13
U100
Serial
Core Sel
MAC
RTC
SD Card
FPGA +5V
C64 +5V
P1
P2
J1
BT1
GND
3V3
+5V
nROMH/nRST
nIRQ/nNMI
RnW/PH2
DOTCLK/CA15
nIO1/CA14
nGAME/CA13
nEXROM/CA12
nIO2/CA11
nROML/CA10
BA/CA9
nDMA/CA8
CD7/CA7
CD6/CA6
CD5/CA5
CD4/CA4
CD3/CA3
CD2/CA2
CD1/CA1
CD0/CA0

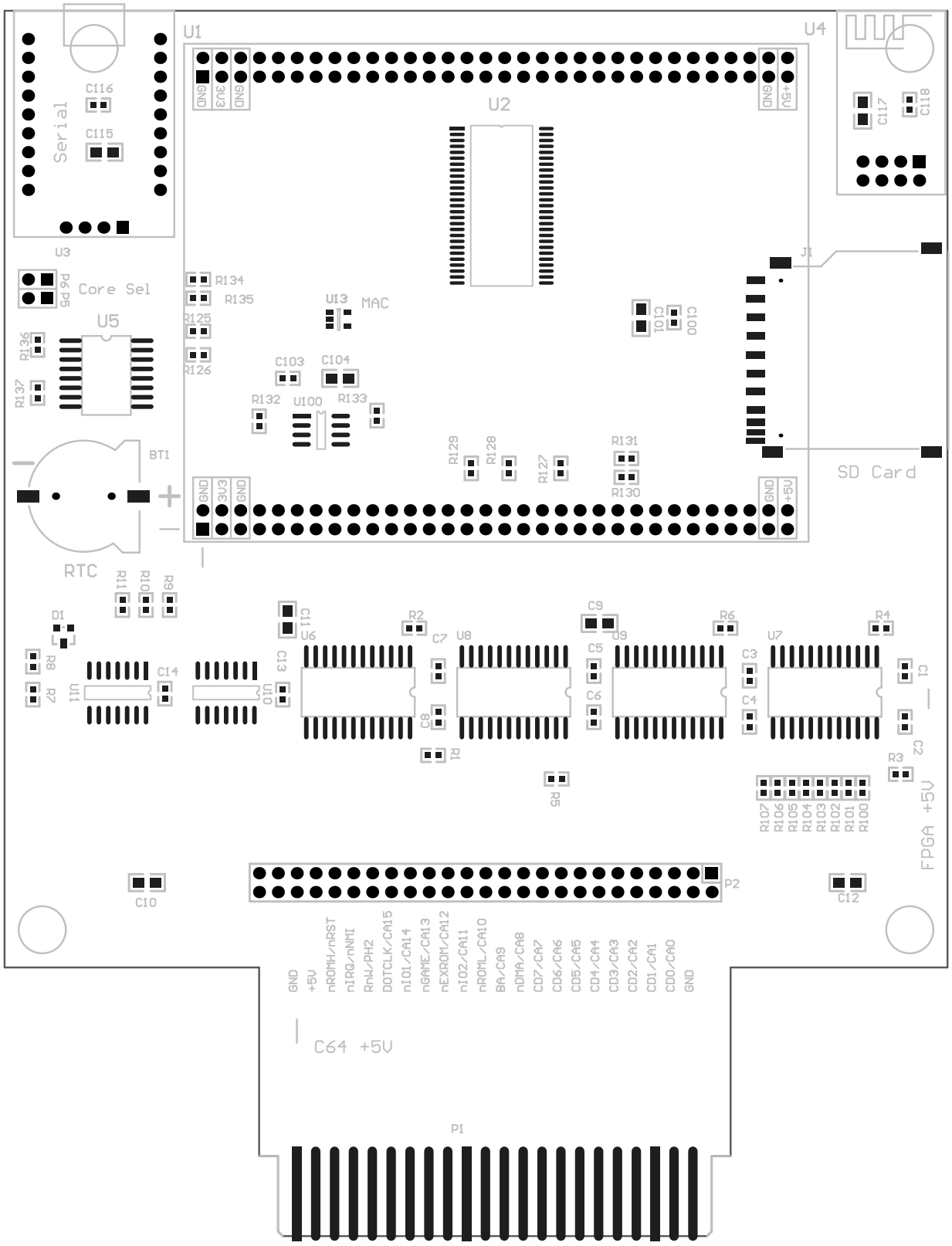
U1
U4
U2
U3
Serial
C116
C115
C117
C118
Core Sel
U5
MAC
U13
U100
R134
R135
R125
R126
R136
R137
R132
R133
C103
C104
C101
C100
J1
SD Card
BT1
RTC
R129
R128
R127
R131
R130
GND
3V3
+5V
D1
U6
U8
U9
U7
U11
U10
C1
C2
C3
C4
C5
C6
C7
C8
C9
C10
C11
C12
C13
C14
R1
R2
R3
R4
R5
R6
R7
R8
R9
R10
R11
R100
R101
R102
R103
R104
R105
R106
R107
FPGA +5V
P2
P1
C64 +5V
GND
+5V
nROMH/nRST
nIRQ/nNMI
RnW/PH2
DOTCLK/CA15
nIO1/CA14
nGAME/CA13
nEXROM/CA12
nIO2/CA11
nROML/CA10
BA/CA9
nDMA/CA8
CD7/CA7
CD6/CA6
CD5/CA5
CD4/CA4
CD3/CA3
CD2/CA2
CD1/CA1
CD0/CA0
GND

Top Overlay

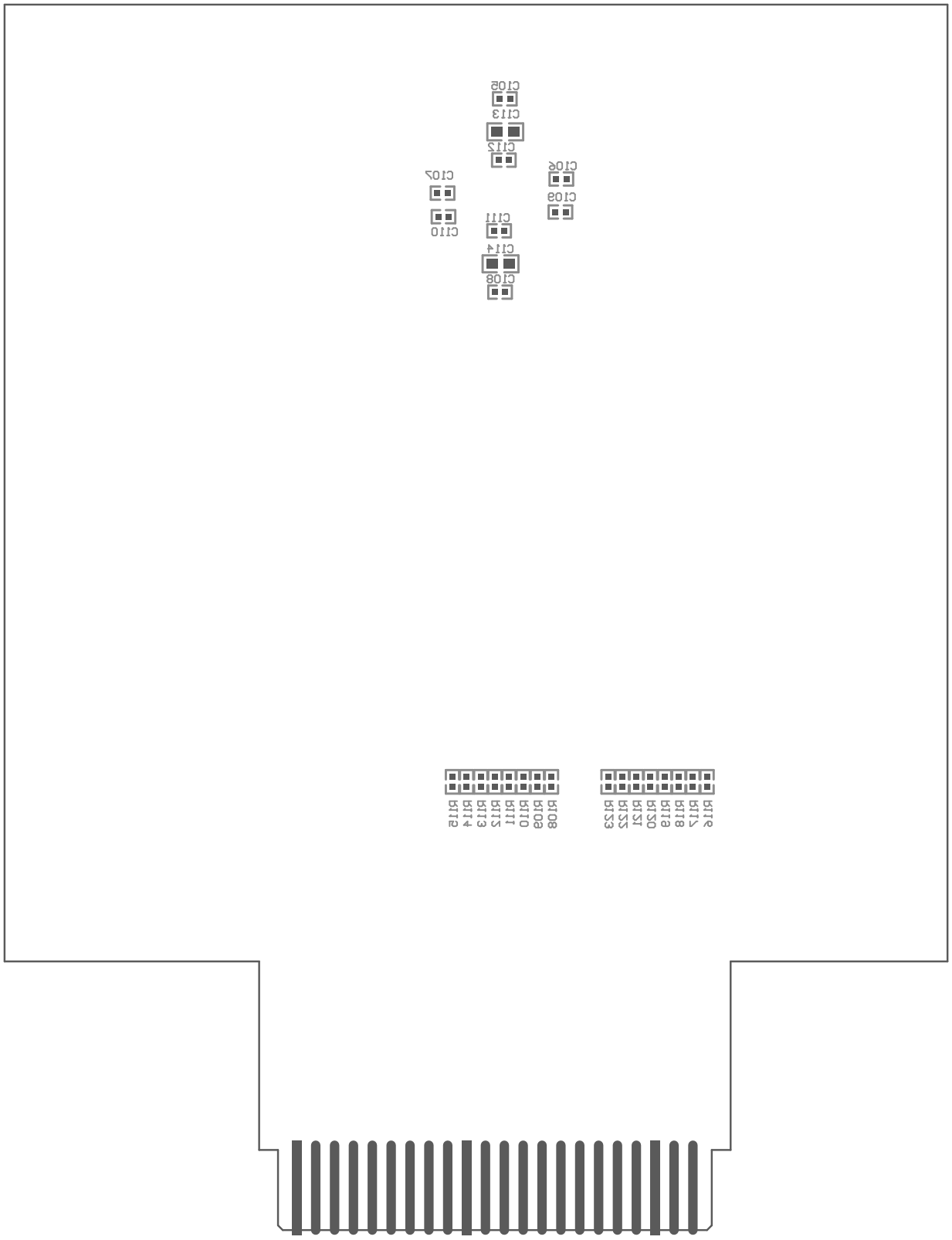

Bottom Overlay