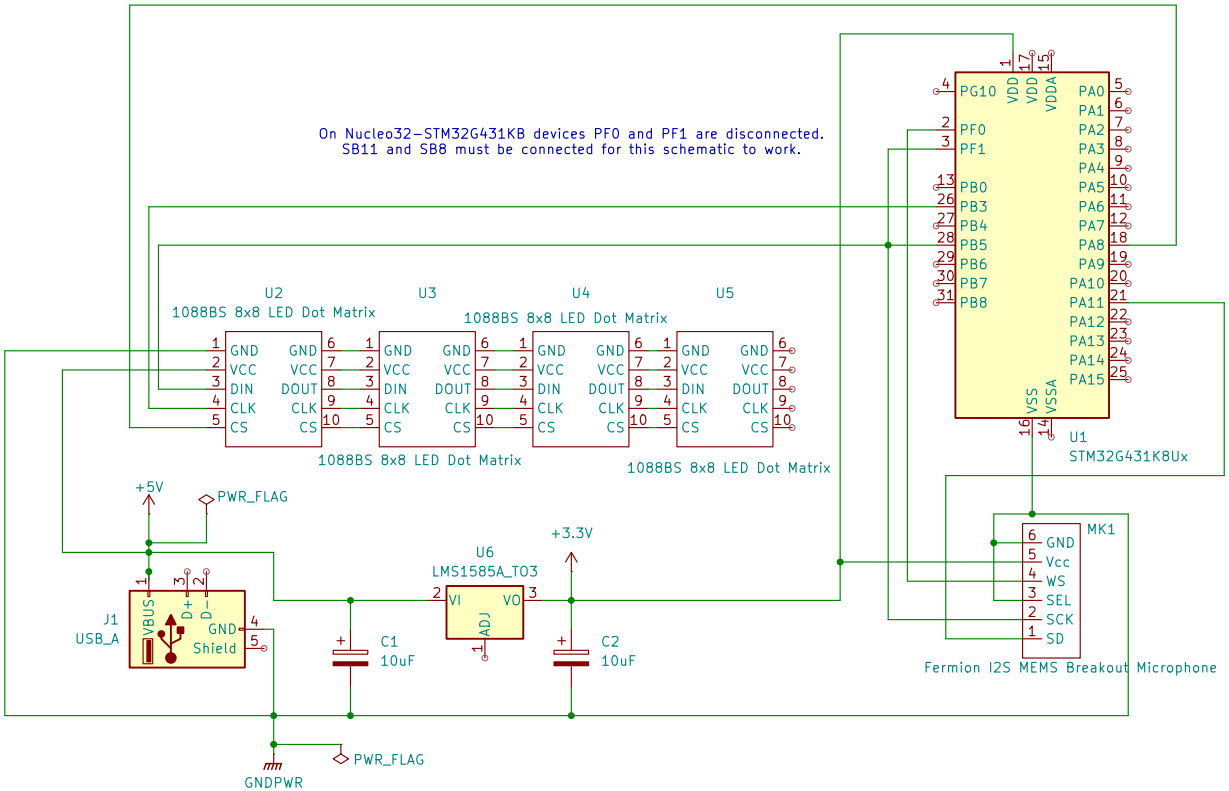


Sheet: /
File: i2s_spekky_matrix.kicad_sch

**Title: Spekky Matrix Schematic**

| | | |
|---|---|---|
| Size: A4 | Date: 2024-09-08 | **Rev: v02** |
| KiCad E.D.A. 8.0.4 | | Id: 1/1 |