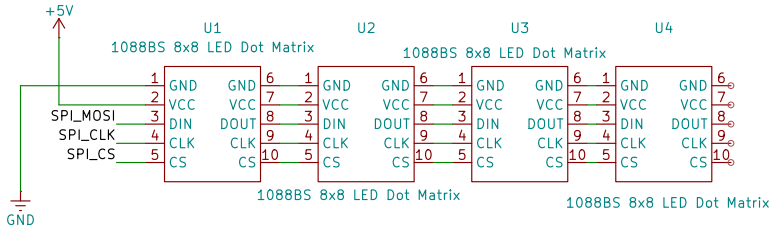

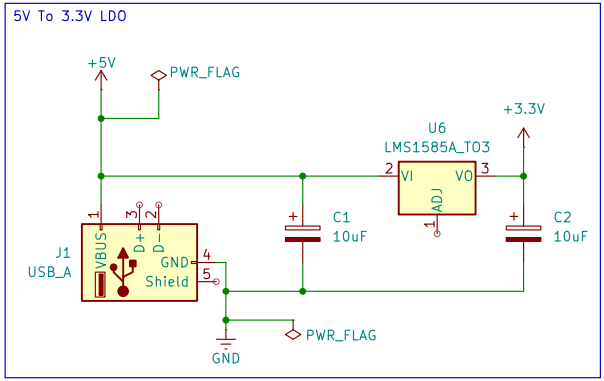

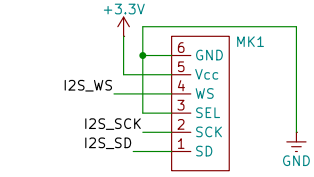

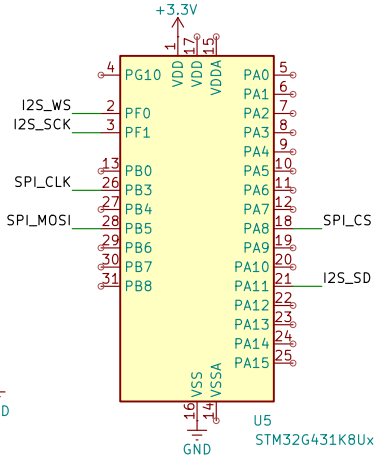

On Nucleo32-STM32G431KB devices PF0 and PF1 are disconnected.
SB11 and SB8 must be connected for this schematic to work.

Sheet: /
File: i2s_spekky_matrix.kicad_sch

Title: Spekky Matrix Schematic

Size: A5	Date: 2024-10-27	Rev: v04
KiCad E.D.A. 8.0.6		Id: 1/1