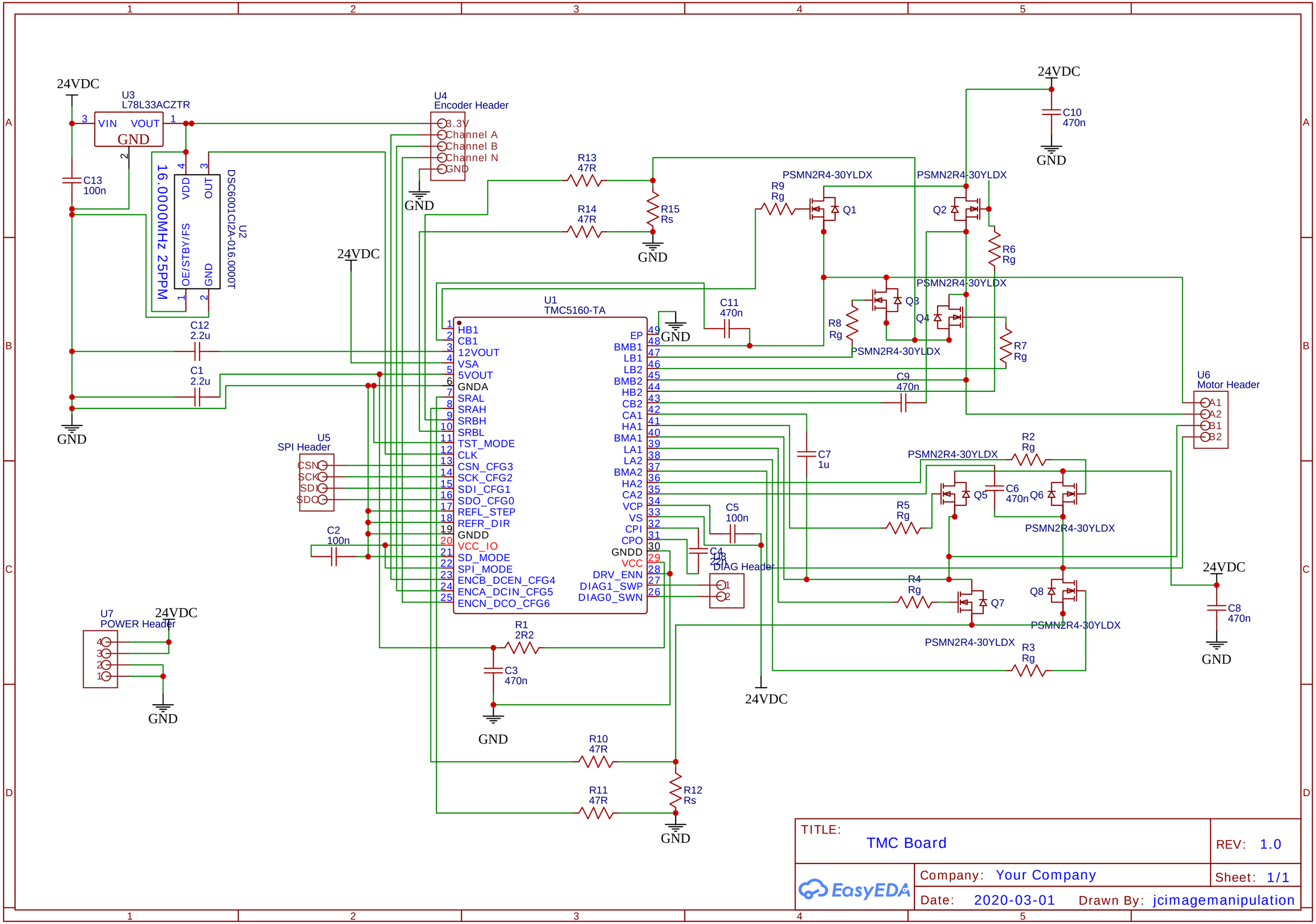

TITLE: TMC Board

REV: 1.0

Company: Your Company

Sheet: 1/1

Date: 2020-03-01

Drawn By: jcimagemanipulation