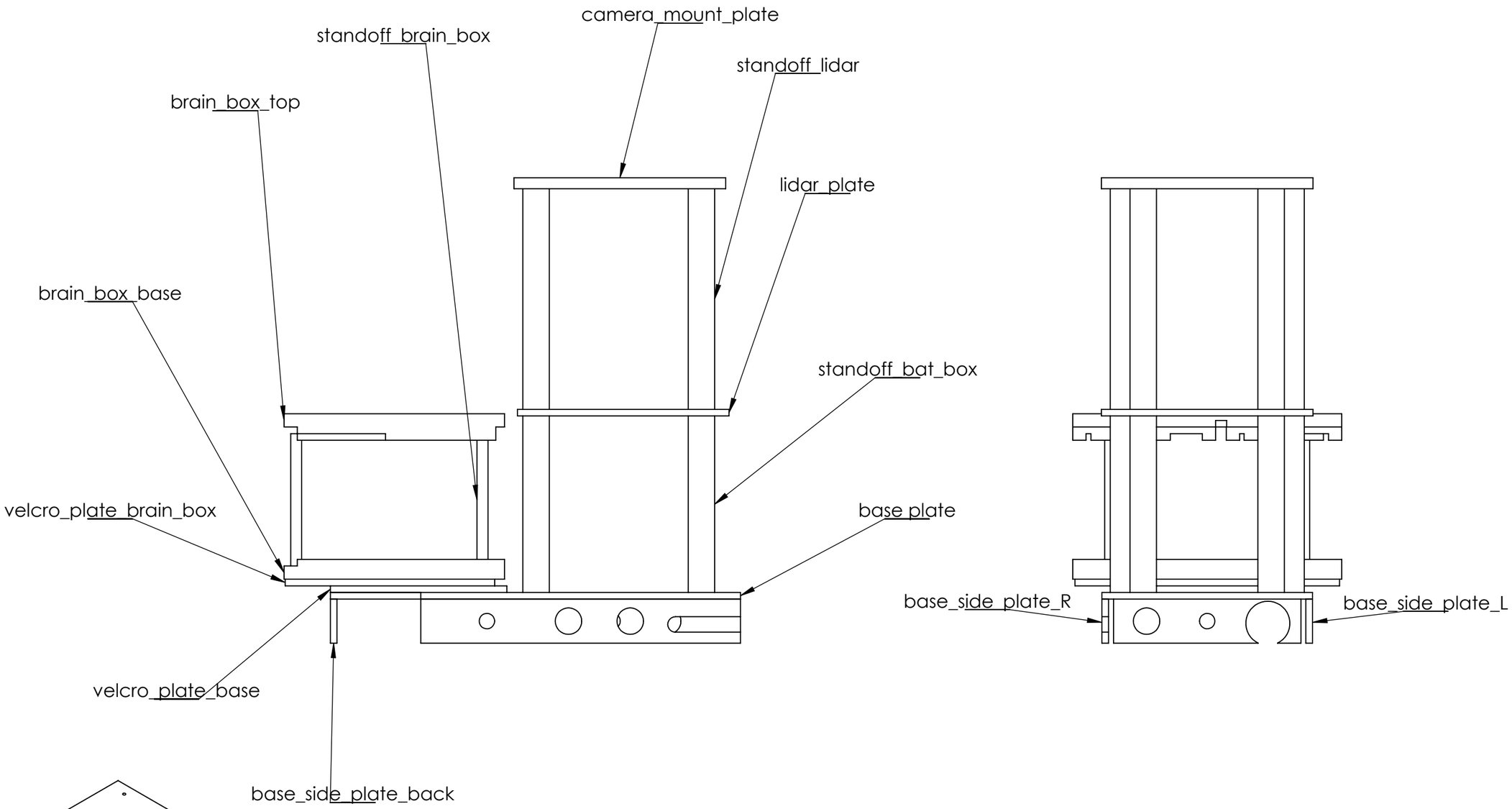

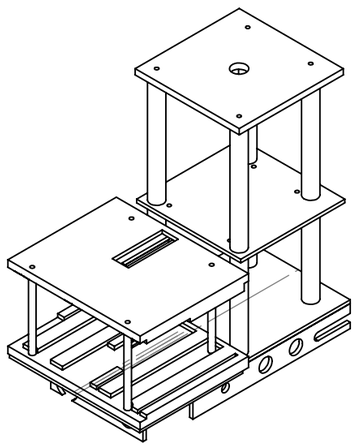

UNLESS OTHERWISE SPECIFIED: DIMENSIONS ARE IN MILLIMETERS SURFACE FINISH: TOLERANCES: LINEAR: ANGULAR:		FINISH:		DEBURR AND BREAK SHARP EDGES		DO NOT SCALE DRAWING	REVISION
	NAME	SIGNATURE	DATE			TITLE:	
DRAWN	Jonathan Carter		8/7/22				
CHK'D							
APPV'D							
MFG							
Q.A				MATERIAL:		DWG NO. Bot_Assem	A3
				WEIGHT:		SCALE:1:5	SHEET 1 OF 1

SOLIDWORKS Educational Product. For Instructional Use Only.