CUI Devices is now Same Sky! Learn More

MODEL: UJ20-C-H-G-TH-P16-TR | DESCRIPTION: USB RECEPTACLE

FEATURES

- USB Type C receptacle
- USB 2.0
- 480 Mbit/s data transfer speed
- reflow solder compatible
- tape & reel packaging

SPECIFICATIONS

parameter	conditions/description	min	typ	max	units
USB standard	USB 2.0				
rated input voltage				48	Vdc
rated input current	as per EIA-364-70, Method B power pins collectively (A1, A4, A9, A12, B1, B4, B9, B12) VCONN pins individually (A5, B5) all other signal pins individually			 5.0 1.25 0.25	 A A A
contact resistance[1]	between terminals and mating plug			40	mΩ
insulation resistance	at 100 Vdc between adjacent contacts	100			MΩ
voltage withstand	between adjacent contacts for 1 minute	100			Vac
insertion force	at a rate of 30 cycles/min	5		20	N
withdrawal force	at a rate of 30 cycles/min	8		20	N
life	at a rate of 500 cycles per hour		10,000		cycles
operating temperature		-25		85	°C
flammability rating	UL94V-0				
RoHS	yes				

Note: 1. When measured at 20 mV / 100 mA.

SOLDERABILITY

parameter	conditions/description	min	typ	max	units
reel storage	at relative humidity 65~70%	25		30	°C
reflow soldering[3]	see reflow profile		260		°C

Note: 3. It is recommended to reflow solder within 3 months from opening vacuum packaging at a temperature of 25~30°C & relative humidity 65~70%.

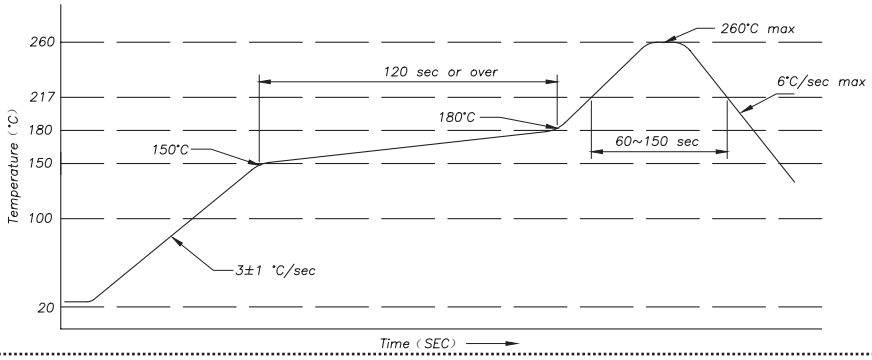

MECHANICAL DRAWING

units: mm
tolerance:
X.X ±0.30 mm
X.XX ±0.20 mm
X.XXX ±0.10 mm
unless otherwise specified

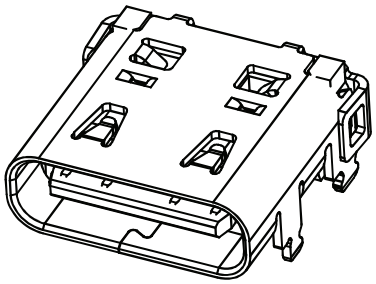

DESCRIPTION	MATERIAL	PLATING/COLOR
housing	PA9T (UL94V-0)	black
contact	C1815	contact area: 3 μ" gold over 50 μ" nickel solder area: 1 μ" gold over 50 μ" nickel
mid plate & spring	SUS301	30 μ" nickel
front shell	SUS304	50 μ" nickel

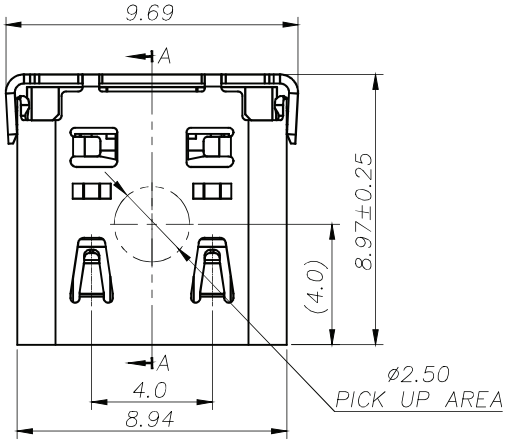

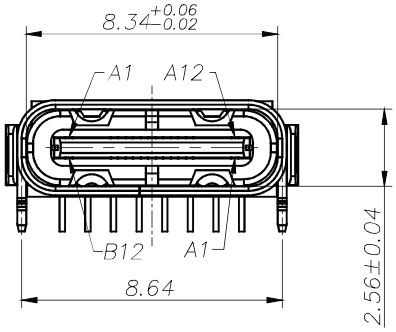

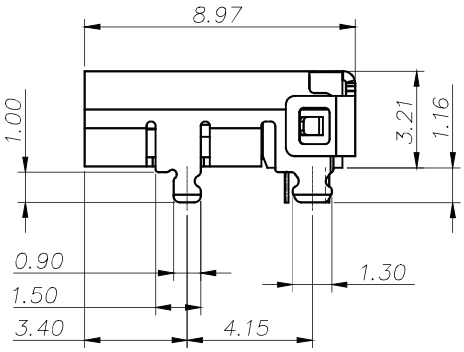

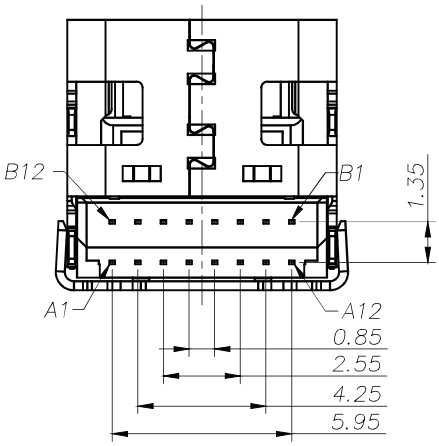

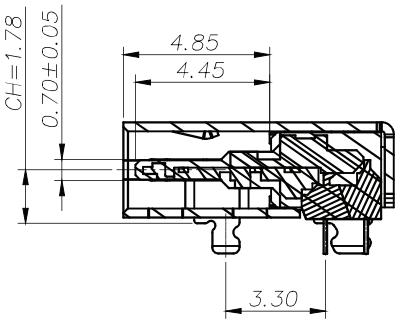

SECTION: A—A

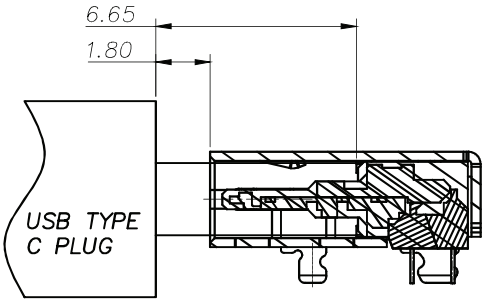

AFTER MATING

MECHANICAL DRAWING (CONTINUED)

units: mm
PCB tolerance: ±0.05 mm

PIN CONNECTIONS			
PIN	SIGNAL NAME	PIN	SIGNAL NAME
A1	GND	B12	GND
A4	VBUS	B9	VBUS
A5	CC1	B8	SBU2
A6	Dp1	B7	Dn2
A7	Dn1	B6	Dp2
A8	SBU1	B5	CC2
A9	VBUS	B4	VBUS
A12	GND	B1	GND

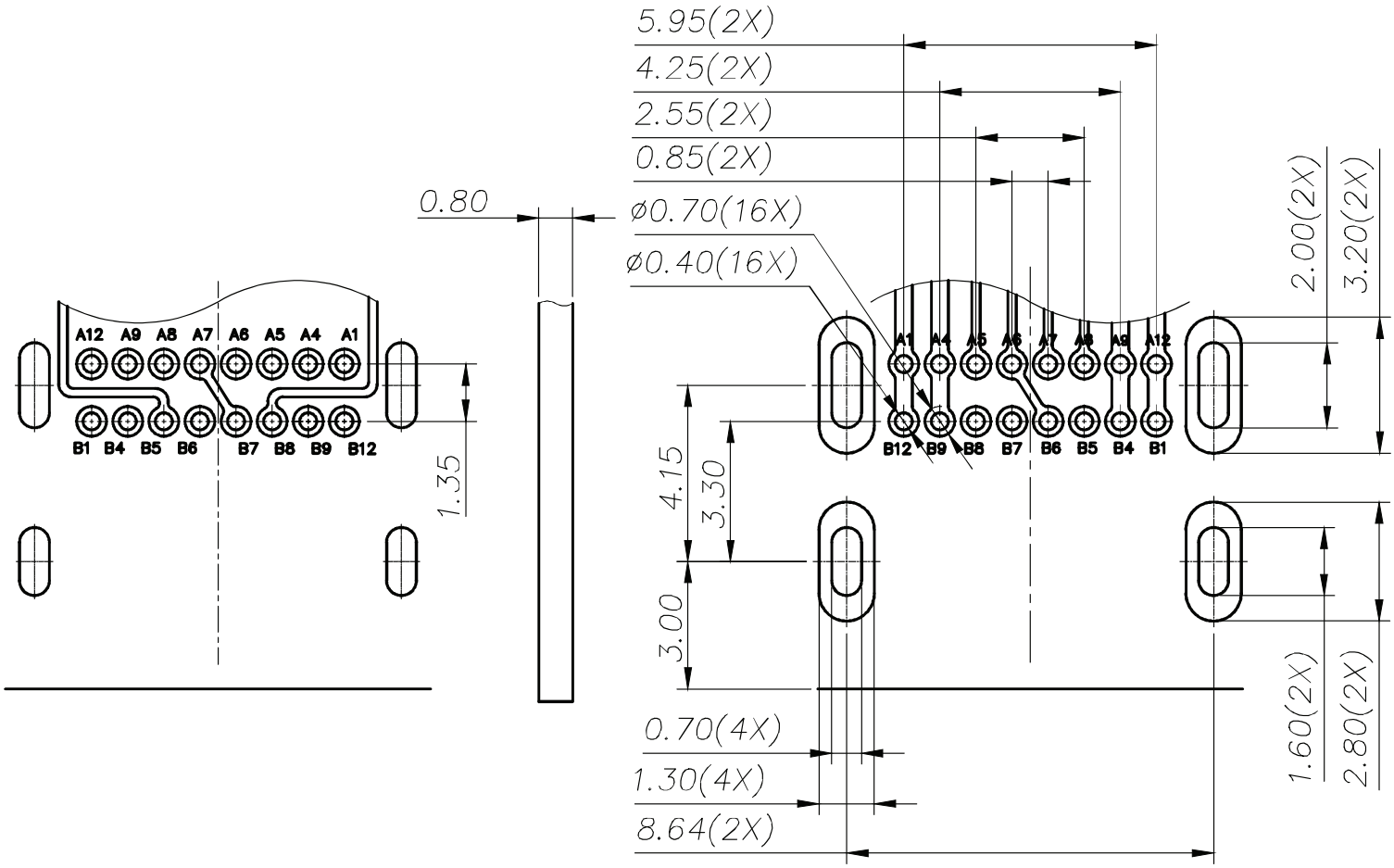

Recommended PCB Layout
Bottom View

Recommended PCB Layout
Top View

PACKAGING

units: mm

Reel Size: Ø380
Reel QTY: 1,000 pcs per reel
Carton Size: 400 x 400 x 320 mm
Carton QTY: 10,000 pcs

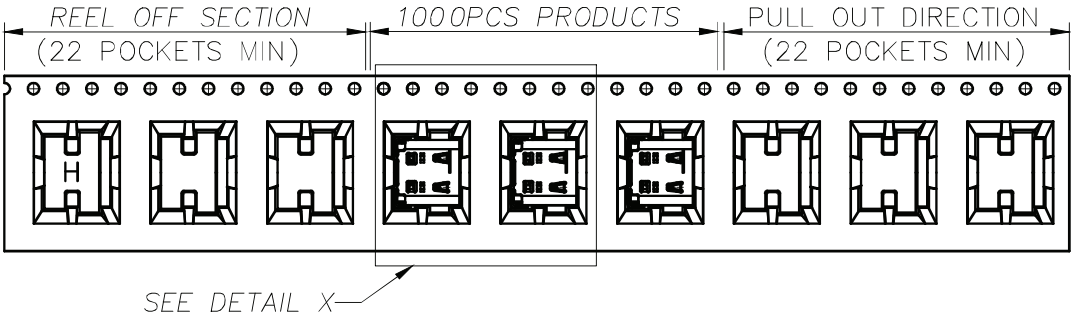

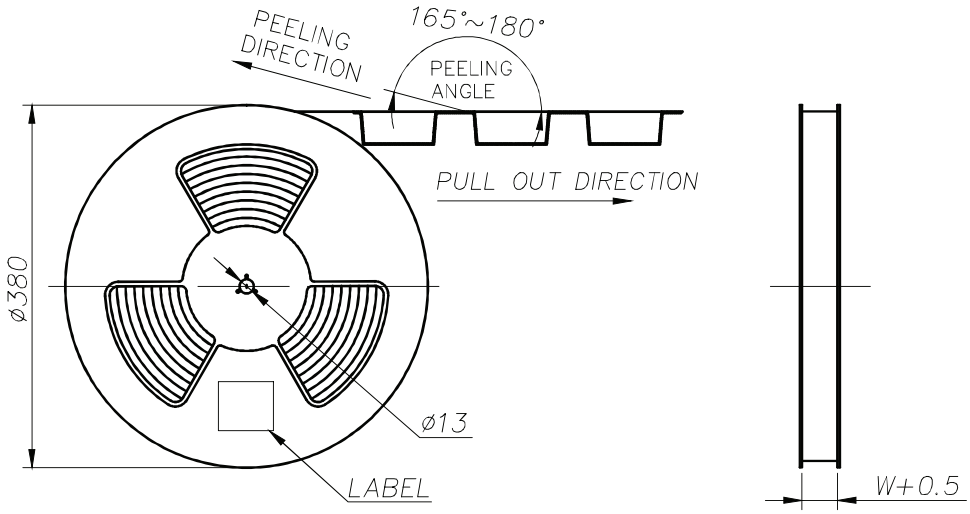

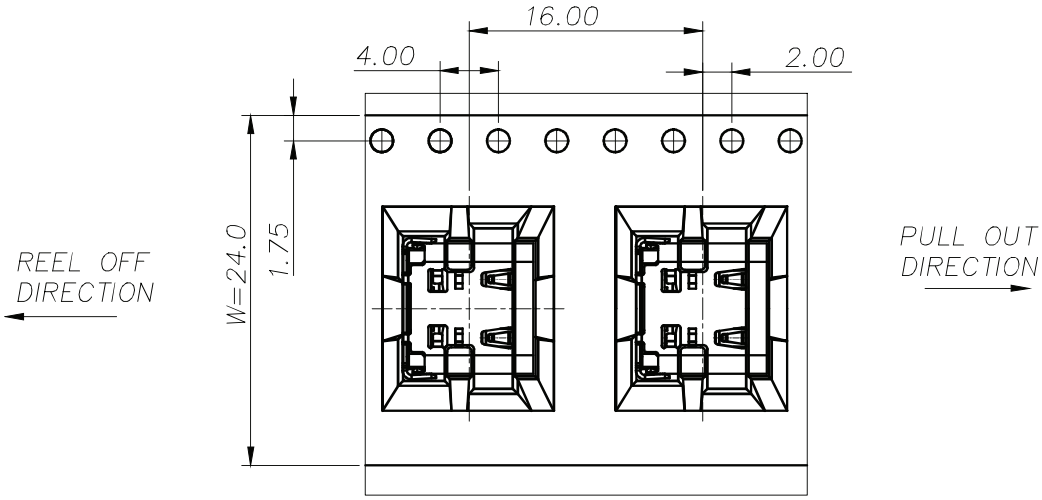

DETAIL X
SCALE 2:1

REVISION HISTORY

rev.	description	date
1.0	initial release	07/22/2024
1.01	CUI Devices rebranded to Same Sky	09/12/2024

The revision history provided is for informational purposes only and is believed to be accurate.

Same Sky offers a one (1) year limited warranty. Complete warranty information is listed on our website.

Same Sky reserves the right to make changes to the product at any time without notice. Information provided by Same Sky is believed to be accurate and reliable. However, no responsibility is assumed by Same Sky for its use, nor for any infringements of patents or other rights of third parties which may result from its use.

Same Sky products are not authorized or warranted for use as critical components in equipment that requires an extremely high level of reliability. A critical component is any component of a life support device or system whose failure to perform can be reasonably expected to cause the failure of the life support device or system, or to affect its safety or effectiveness.