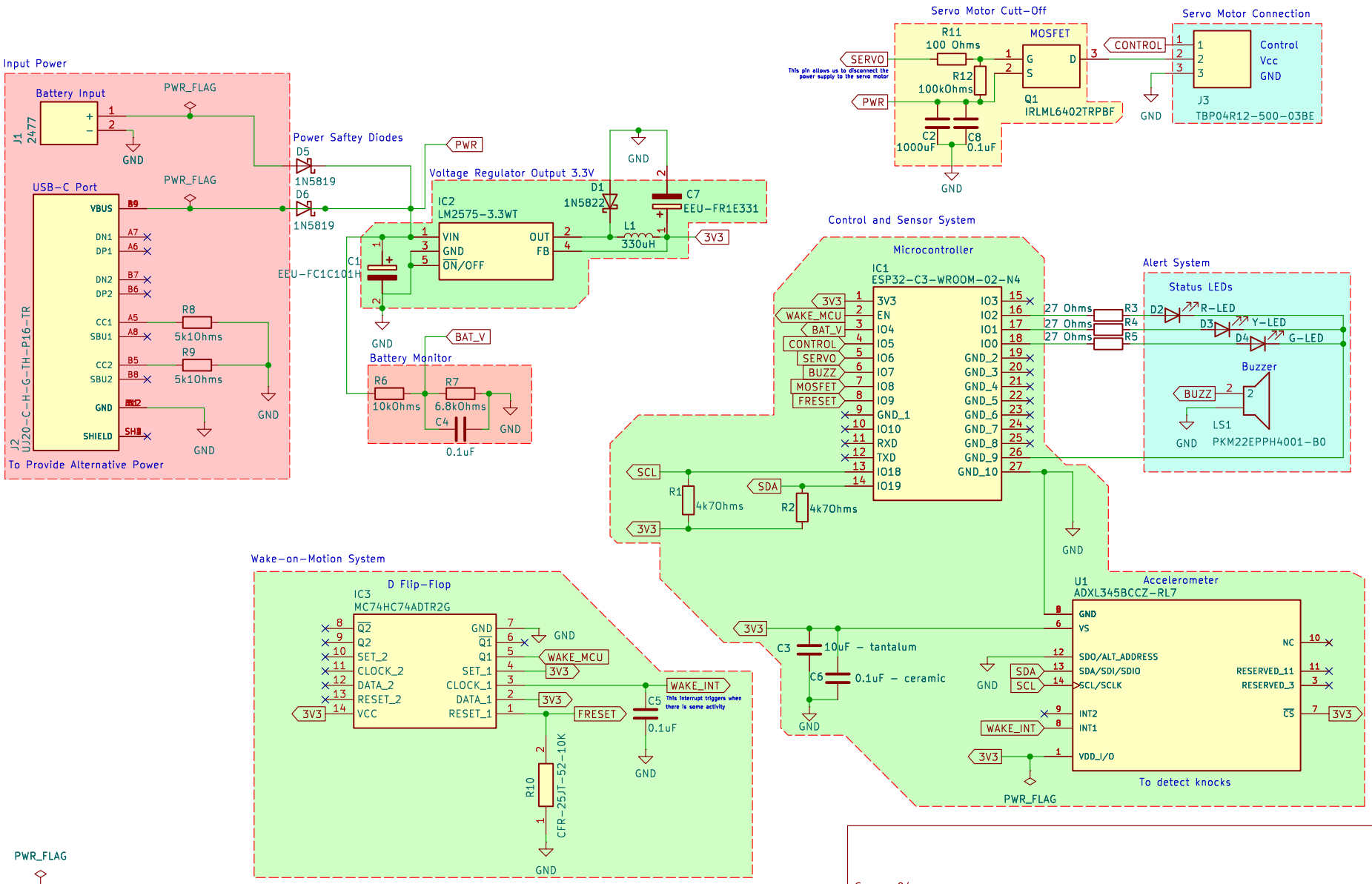

Group 04

HSRW

Sheet: /

File: KnockLock.kicad_sch

Title: KnockLockSchematic

Size: A4	Date: 2025-10-25	**Rev: 1.1**
KiCad E.D.A. 9.0.5		Id: 1/1