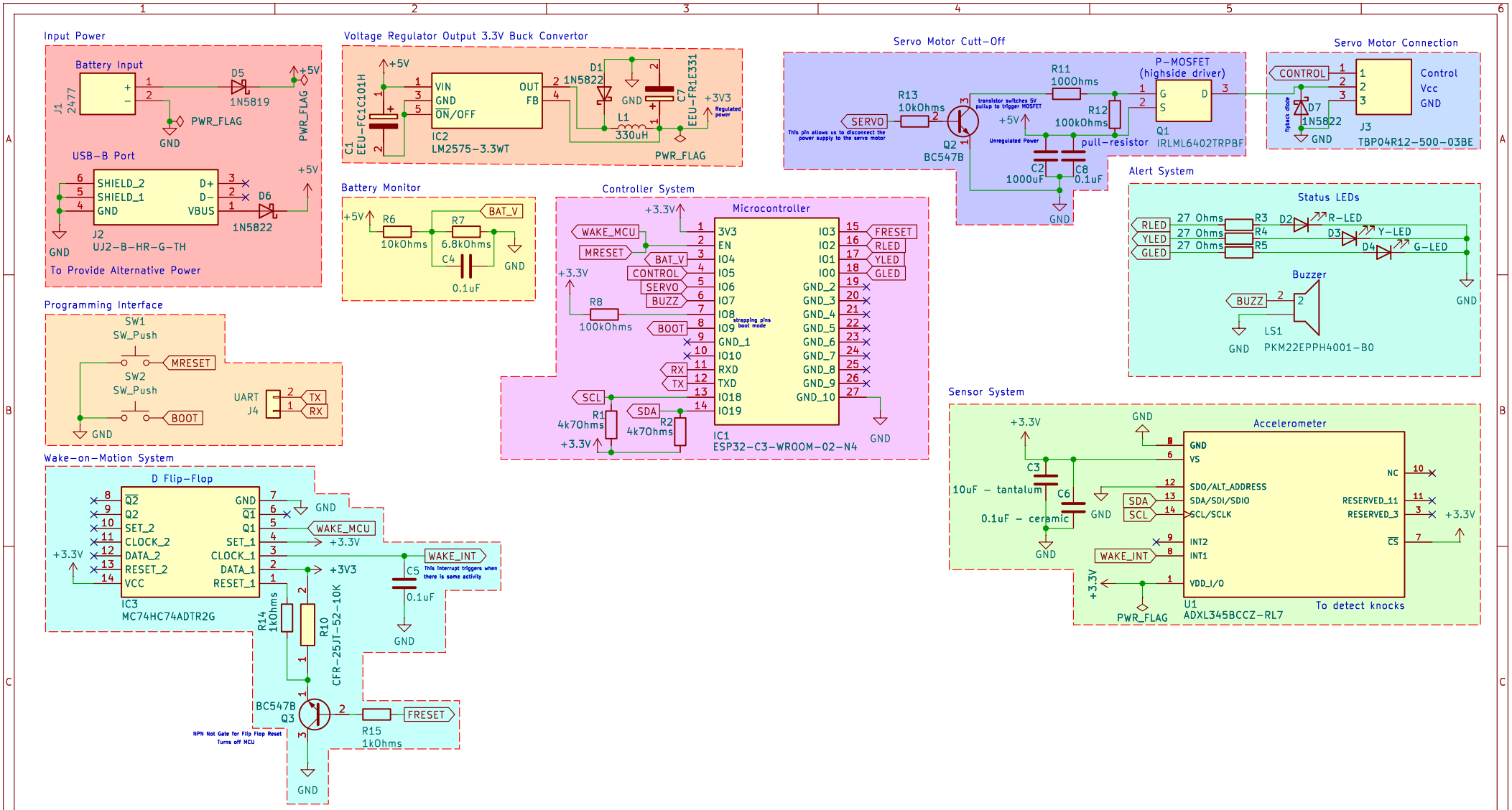

Group 04
HSRW
Sheet: /
File: KnockLock.kicad_sch

Title: KnockLockSchematic

Size: A4	Date: 2025-10-30	**Rev: 1.5**
KiCad E.D.A. 9.0.3		Id: 1/1