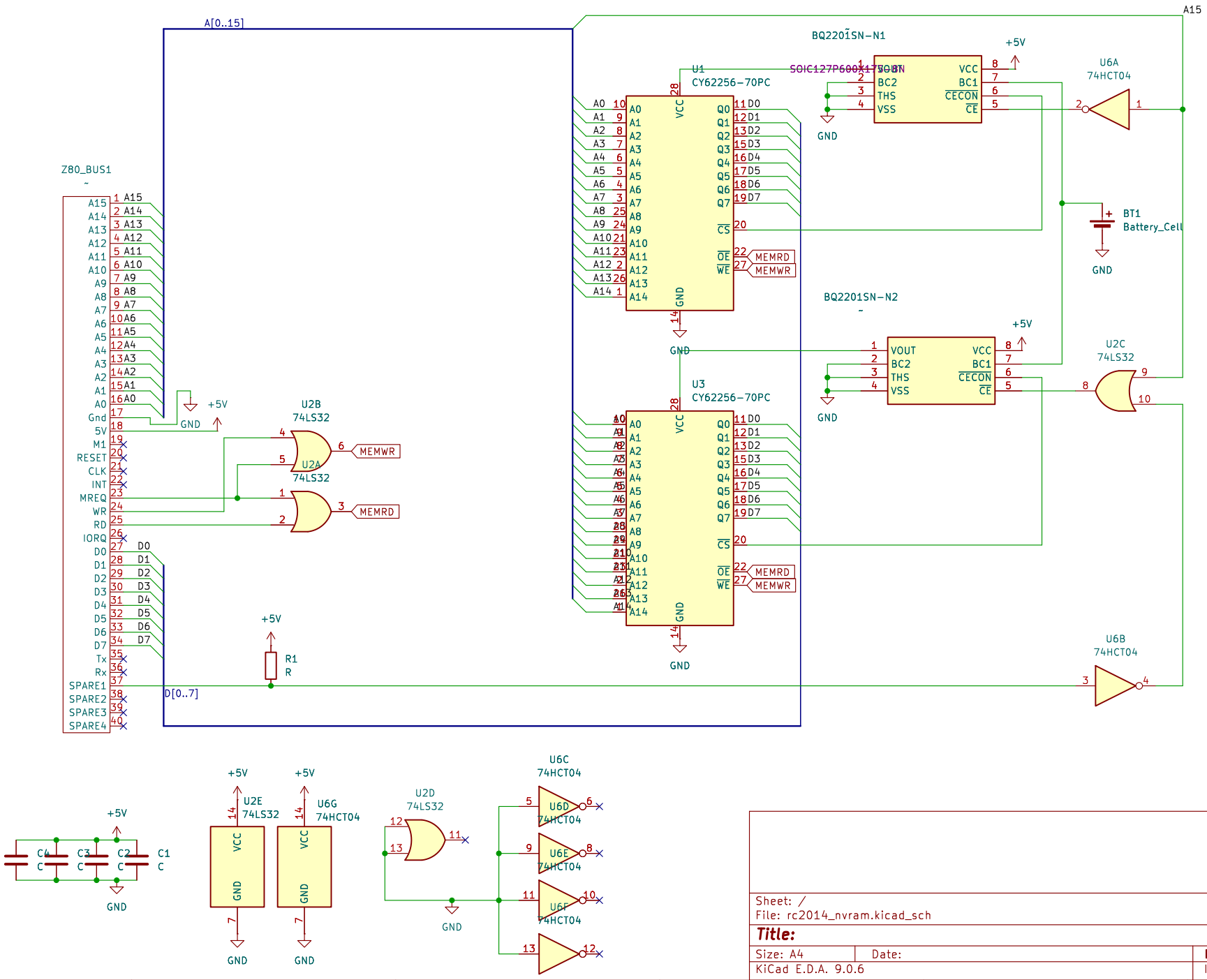
A[0..15]
A15
BQ2201SN-N1
+5V
U6A
74HCT04
U1
CY62256-70PC
SOIC127P600X175-28N
VCC
BC2
THS
VSS
BC1
CECON
CE
GND
BT1
Battery_Cell
MEMRD
MEMWR
BQ2201SN-N2
VOUT
U2C
74LS32
U3
Z80_BUS1
U2B
U2A
R1
R
D[0..7]
U6B
U2E
U6G
U2D
U6C
U6D
U6E
U6F
C1
C2
C3
C4
Sheet: /
File: rc2014_nvram.kicad_sch
Title:
Size: A4
Date:
Rev:
KiCad E.D.A. 9.0.6
Id: 1/1