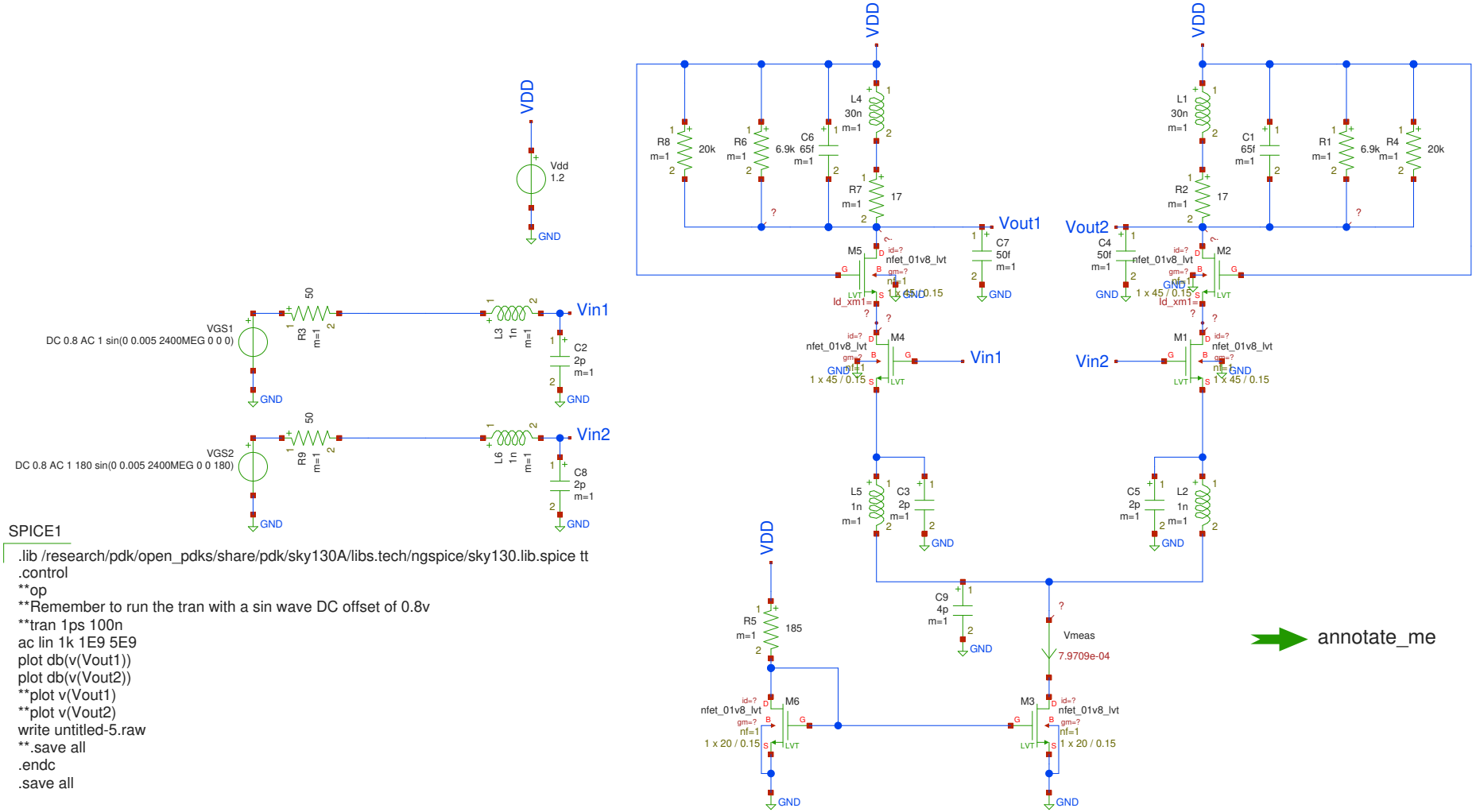

SPICE1

```
.lib /research/pdk/open_pdks/share/pdk/sky130A/libs.tech/ngspice/sky130.lib.spice tt
.control
**op
**Remember to run the tran with a sin wave DC offset of 0.8v
**tran 1ps 100n
ac lin 1k 1E9 5E9
plot db(v(Vout1))
plot db(v(Vout2))
**plot v(Vout1)
**plot v(Vout2)
write untitled-5.raw
**.save all
.endc
.save all
```