Atomic elementary flux modes explain the steady state flow of metabolites in large-scale flux networks

Justin G. Chitpin[1,2] and Theodore J. Perkins[1,2*]

[1]Ottawa Hospital Research Institute, 501 Smyth Road, Ottawa, K1H 8L6, Ontario, Canada

[2]Ottawa Institute of Systems Biology, Department of Biochemistry, Microbiology and Immunology, University of Ottawa, 451 Smyth Road, Ottawa, K1H 8M5, Ontario, Canada

* Corresponding author.

Flux network/Elementary flux mode/flow decomposition/Markov chain/atom mapping

Abstract

Steady state fluxes are a measure of cellular activity under homeostatic conditions, but understanding how individual substrates are metabolised remains a challenge in large-scale networks. Pathway-based approaches such as elementary flux mode (EFM) analysis are limited to small networks due to the combinatorial explosion of pathways and the ambiguity of decomposing fluxes onto EFMs. Here, we present an alternative approach explaining metabolic fluxes in terms of the steady state flow of their atomic constituents. We refer to these pathways as atomic elementary flux modes (AEFMs) and show that computations involving AEFMs are orders of magnitude faster than standard EFMs. Using our approach, we enumerate carbon and nitrogen AEFMs in five genome-scale metabolic models and compute the AEFM decomposition of fluxes estimated in a HepG2 liver cancer cell line. Our results systematically characterise carbon and nitrogen remodelling and, on the HepG2 network, predict glutamine metabolism through a recently discovered non-canonical TCA cycle.

Introduction

Recent technological and computational advancements are leading to a rise in cellular and subcellular metabolic flux data (Stern et al, 2023; Lee et al, 2019; Wang et al, 2022a,b). These fluxes quantify the rate of metabolite interconversions within a cell or their movements across subcellular compartments. Metabolic fluxes are studied to understand the dynamics of substrate switching (Zampieri et al, 2019; Kochanowski et al, 2021), redox balancing (McKinlay & Harwood, 2010; Franchina et al, 2022), overflow metabolism (Basan et al, 2015; Vander Heiden et al, 2009), cell differentiation (Endo et al, 2022; Jackson & Finley, 2024), and cellular communities (Schuetz et al, 2012; Yu et al, 2022; Gustafsson et al, 2024). 'Fluxomics' (Emwas et al, 2022; Sanford et al, 2002) is emerging as a field dedicated to quantifying the totality of fluxes within biological systems.

Current experimental and computational methods generally estimate fluxes under metabolic homeostasis. Under this assumption, the production and consumption of metabolites are balanced, and the fluxes are said to be under steady state. Techniques such stable isotope tracing analysis (SITA) experimentally determine steady state fluxes by culturing cells in labelled substrates and quantifying their incorporation within endogenous metabolites (Buescher et al, 2015; Antoniewicz, 2018). Using this method, fluxes have been measured in major metabolic subsystems such as glycolysis, the pentose phosphate pathway, and the TCA cycle (Zamboni et al, 2009; Ahn et al, 2017; Wu et al, 2019). Many computational methods, generally based on flux balance analysis, have been proposed to infer steady state fluxes in metabolic networks from transcript, protein, and metabolite abundance data (Uematsu et al, 2022; González-Arrué et al, 2023; Huang et al, 2023; Kaste & Shachar-Hill, 2023; Lee

et al, 2023). Collectively, these approaches have been used to estimate and predict fluxes in genome-scale metabolic models (GEMs) involving hundreds to thousands of reactions (Nilsson et al, 2020b; Cherkaoui et al, 2022; Gelbach et al, 2024).

Although much effort has been made to estimate steady state fluxes, less emphasis has been placed on developing methods to analyze these large-scale flux datasets. In contrast to abundance data (e.g. transcripts, proteins, metabolites), steady state fluxes are constrained by the reaction stoichiometries between metabolite inflows and outflows. In a network with fixed source and sink fluxes, an increase in flux along one metabolic pathway must decrease fluxes along one or more adjacent pathways to maintain mass conservation. For example, Usui et al showed that decreasing phosphoglucose isomerase expression redirected glycolytic fluxes towards the pentose phosphate and Entner-Doudoroff pathways in a *pgi* expression-controlled *E. coli* strain (Usui et al, 2012). In more complex GEMs containing thousands of fluxes (e.g. Brunk et al (2018); Robinson et al (2020); Wang et al (2021)), however, a change in one reaction rate could alter network fluxes well beyond neighbouring reactions (Nobile et al, 2021).

This problem of understanding the flow of metabolites within steady state flux networks has historically been addressed through the concept of elementary flux modes (EFMs). EFMs are a pathway-based approach to analyze metabolic networks and are defined as minimal sets of biochemical reactions that maintain steady state flux (Schuster & Hilgetag, 1994). This minimal property specifies that an EFM cannot be decomposed into two or more smaller pathways carrying steady state flux. An attractive property of EFMs is that any set of steady state fluxes in a network can be explained as a positive, linear combination of EFMs (Schuster et al, 1999). While EFMs are a mechanistic explanation of how metabolites travel through

networks, the number of EFMs scales combinatorially as a function of network size (Acuña et al, 2009). It thus remains computationally infeasible to enumerate EFMs in GEMs after over two decades of algorithmic advancements (e.g. Gagneur & Klamt 2004; Terzer & Stelling 2008; Buchner & Zanghellini 2021). The number of EFMs also poses a challenge for explaining network fluxes in terms of their EFMs. When there are more EFMs than linearly independent fluxes, there exist multiple ways to assign EFM weights that reconstruct the observed network fluxes. Consequently, structural analyses of EFMs and downstream analyses of their weights have been limited to small-scale metabolic subnetworks (Fakih et al, 2023; Mpabanzi et al, 2022; Toya & Shimizu, 2022; Matsuda et al, 2011; Schwartz & Kanehisa, 2006).

In parallel with EFM analysis, the task of analysing metabolic pathways has also been approached by numerous other graph-theoretic approaches. These methods derive graphs based, in part, on the metabolic flux network, such as the one shown in Figure 1a which highlights the first steps of glycolysis. In this representation, the nodes correspond to metabolites, directed hyperedges correspond to reactions, and the weights on those hyperedges represent the fluxes along each reaction. To avoid hyperedges, which can lead to more complex metabolic pathways within these networks, an alternative representation is the metabolic graph (Arita, 2000; Wagner & Fell, 2001), whereby metabolite nodes are connected to each other by substrate-product reaction relationships. As shown in Figure 1b, the weighted, directed hyperedges of the original metabolic flux network are converted into unweighted edges between all substrate-product pairs. The resulting graph is typically analysed by K-shortest pathfinding algorithms to identify pathways transforming pairs of source and target metabolites. However, not all pathways in these graphs describe feasible sets of transformations

due to the presence of metabolic byproducts, coenzymes, and cofactors. Subsequent refinements implemented heuristics to avoid these biologically meaningless pathways by enforcing constraints on the minimum structural similarity or number of carbons between metabolite pairs within a pathway (McShan et al, 2003; Rahman et al, 2004; Croes et al, 2006; Pey et al, 2011a; Hafner & Hatzimanikatis, 2021). This problem was fully solved by the introduction of atomic transition graphs (Arita, 2003), which use atom mapping data to model the movement of individual atoms of a given element across substrates and products. We refer to weighted versions of these graphs as *atomic flux graphs*, which are used in isotope-based metabolic flux analysis to predict intracellular reaction fluxes (Wiechert et al, 1999; Weitzel et al, 2007), and highlight an example atomic flux graph tracing the C6 carbon of glucose in Figure 1c.

Current methods to analyse metabolic flux networks and atomic flux graphs are often viewed as independent approaches for metabolic pathway analysis (de Figueiredo et al, 2009b; Algfoor et al, 2017). However, both can be viewed as related types of flux networks operating at the metabolite or metabolite-atom level. One could envision applying metabolic pathway analysis techniques designed for metabolic flux networks on their corresponding atomic flux graphs to study nutrient source catabolism (Zamboni et al, 2015) or engineer organisms to produce desirable metabolic products (Zanghellini et al, 2013). This idea was previously explored by Pey et al (Pey et al, 2011b) who proposed the concept of elementary carbon modes (ECMs). These ECMs were defined as minimal, mass-balanced pathways tracing the flow of individual carbon atoms in an atomic flux graph (Pey et al, 2011b, 2012). Like paths in metabolite-atom graphs, ECMs correspond to either simple paths spanning source and sink metabolite carbons or simple cycles involving internal metabolite-carbon positions.

Although Pey et al noted that there were more ECMs than EFMs while analysing several toy metabolic networks, they did not compare ECM and EFM pathway scaling in larger networks. The number of molecular EFMs can grow increasingly complex because of the numerous ways that different combinations of reactions can balance internal metabolite stoichiometries. In particular, there may be multiple ways of balancing pairs of cofactors (e.g. ATP/ADP, NAD^+/NADH), metabolic byproducts (e.g. water, hydrogen ions), and coenzymes (e.g. coenzyme A). This complexity can lead to an intractable number of pathways that may only differ by reaction subsets required to mass-balance these ubiquitous metabolites. Removing these metabolites may, in part, solve this problem; however, the choice of metabolite to prune is often subjective and not guaranteed to sufficiently reduce the total number of molecular EFMs. In contrast, ECMs are specific to carbon atoms and account for their atom mappings across reactions, it is plausible that the number of these pathways would remain smaller than the number of molecular EFMs in sufficiently large networks.

Since ECMs are specific to carbon pathways, we propose generalising ECMs to any element in an atomic flux network. We refer to these pathways as *atomic elementary flux modes* (AEFMs) and formally define them as the EFMs of an atomic flux graph. To avoid confusion with classical EFMs of metabolic flux networks, we henceforth refer to these pathways as *molecular* EFMs (MEFMs) to emphasize their balance of molecular stoichiometries. The differences between these pathways are highlighted in Figure 1d-e, which shows a representative MEFM spanning multiple source and sink metabolites and a representative AEFM rooted on a given source glucose carbon.

Introducing AEFMs presents several computational challenges regarding their calculation from metabolic flux networks. These include the construction of the corresponding atomic

transition/flux graph, the complete enumeration of all AEFMs from these graphs, and the (unique) determination of the AEFM weights reconstructing the atomic transition graph fluxes. Indeed, Pey et al encountered this latter problem working with carbon AEFMs and were unable to estimate unique sets of weights beyond simple carbon flux graphs (Pey et al, 2012).

In our previous work, we developed a novel solution to the EFM flux decomposition problem for the special case of unimolecular reaction networks under a Markov constraint. We modelled a hypothetical particle moving between metabolites under the assumption that the transition probability of each reaction was proportional to the observed steady state flux. By expanding the notion of Markov chain state to include sequences of metabolites, we proposed an algorithm to efficiently compute simple cycle probabilities corresponding to a given EFM. We called this construct the *cycle-history Markov chain* (CHMC) and proved that these EFM probabilities could be scaled to weights that fully reconstructed the flux along each reaction (Chitpin & Perkins, 2023).

Here, we combine three key ideas in metabolic modelling to produce a pipeline for analysing metabolic flux networks under steady state. First, we generalise the notion of ECMs to AEFMs, which can track any atom type through an atomic transition/flux graph. Second, we use a state-of-the-art machine learning-based algorithm to automate (with manual verification) the construction of atomic flux graphs. Third, we use the CHMC method to enumerate AEFMs in atomic flux graphs, uniquely determining the weight of each mass-balanced path across and within the graph. Using our approach, we demonstrate for the first time the feasibility of AEFM enumeration, by showing that the numbers of these carbon and nitrogen pathways are orders of magnitude smaller than the number of MEFMs

in five metabolic networks. We then analyse the structure of these AEFMs characterising carbon and nitrogen remodelling within and across nutrient sources. Lastly, we run our full pipeline on a HepG2 metabolic flux network to examine glutamine carbon remodelling. Our AEFM weight analysis reveals that glutamine consumption is routed through a small number of highly active AEFMs, including a recently discovered non-canonical TCA cycle (Arnold et al, 2022).

Results

Pipeline for AEFM enumeration and weight identification

We outline our computational pipeline in Figure 2 to enumerate AEFMs and uniquely assign their weights when the steady state network fluxes are known. In step 1, we require as inputs the metabolic network defined by a set of metabolites and reactions encoded as a stoichiometry matrix, the metabolite structures denoted as SMILES strings, the element type, and the steady state fluxes. From these inputs, the resulting metabolic flux network is constructed in step 2 and validated to ensure it satisfies all requirements necessary to construct the corresponding atomic flux graph in step 3. Our program then checks that the metabolic flux network contains no pseudometabolites (since they have no defined structure nor SMILES string), all reactions are mass-balanced at the atomic level, all stoichiometric coefficients are integers (since atoms are not split in biochemical reactions), and that all reaction fluxes are under steady state. Any pseudometabolites and pseudoreactions are removed from the network and replaced with unimolecular source and sink fluxes to preserve steady

state among other internal metabolites. Once pre-processed, we then construct the reaction SMILES strings from the stoichiometry matrix and list of SMILES strings. These reaction SMILES strings are imputed into the atom mapping program RXNMapper (Schwaller et al, 2021) to map the position of each atom within each reaction equation. At this stage, the atom mapping predictions can be visualised using plotting utilities within our pipeline to ensure correct atom mappings. Any incorrect mappings can be manually curated, as required, by directly modifying the reaction SMILES strings. Next in step 3, these atom mappings are used to construct atomic transition/flux graphs rooted on each source metabolite atom entering the network for all atoms of a particular element, and accounting for reactions with multiple substrate stoichiometries (see Methods and Figures S1-S2). The corresponding ACHMCs of these atomic flux graphs are then constructed in step 4 to enumerate all AEFMs. Finally, the AEFM weights are computed in step 4 by steady state analysis of the ACHMC (see Methods for details).

Enumerating AEFMs is computationally tractable in large-scale networks

Given the major computational challenge of enumerating MEFMs in networks with > 100 metabolites and reactions, we first sought to test whether it was feasible to enumerate AEFMs in GEMs. We selected five GEMs across distinct organisms which included metabolic models of *E. coli* (E. coli core; Orth et al 2010b; Data ref: Orth et al 2010a), human red blood cells (iAB RBC 283; Bordbar et al 2011b; Data ref: Bordbar et al 2011a), *H. pylori* (iIT341; Thiele et al 2005b; Data ref: Thiele et al 2005a), *S. aureus* (iSB619; Becker &

Palsson 2005b; Data ref: Becker & Palsson 2005a), and human liver cancer cells (HepG2; Nilsson et al 2020b; Data ref: Nilsson et al 2020a). These models were pre-processed to ensure unambiguous atom mappings across all reactions. Specifically, all metabolites with no known structures (pseudometabolites), and pseudoreactions with non-integer stoichiometries were removed from the networks. The resulting metabolic networks ranged between 71 and 547 metabolites and 144 to 974 reactions (Figure S3). We then attempted to enumerate the MEFMs using FluxModeCalculator, currently the fastest MEFM enumeration program written in MATLAB (van Klinken & Willems van Dijk, 2016), and our AEFM enumeration pipeline written in Julia (Figure 2 steps 1-4). For the AEFM analysis, we enumerated all AEFMs from each carbon or nitrogen atom in every source metabolite.

We first asked whether it was possible to enumerate the MEFMs of the five pre-processed GEMs. Running FluxModeCalculator on a desktop PC with 32 threads and 64GB of memory, we attempted to enumerate the MEFMs for each network. We found this computation to be feasible for the two smallest E. coli core and iAB RBC 283 networks which contained 5,999,302 and 5,058,711 MEFMs, respectively. These computations took 96 and 21 minutes to complete, running FluxModeCalculator in single-threaded mode. However, we were unable to enumerate the MEFMs of the remaining networks after 7 days of wall time. Because of its memory-efficient implementation, we observed computing power to be the main bottleneck limiting computational feasibility. Inspecting the MATLAB program output for the largest HepG2 network, for example, revealed it to have enumerated 392,990 MEFMs satisfying 25 double description method constraints with 1,514,545,516 remaining candidate MEFMs and 27 further constraints.

In contrast with MEFM enumeration, our AEFM pipeline was able to enumerate all car-

bon and nitrogen AEFMs for all five networks. Figure 3a shows the total number of AEFMs and MEFMs enumerated by our program MarkovWeightedEFMs.jl and FluxModeCalculator on the five pre-processed GEMs. Across all networks, we enumerated between 6,519 to 2,180,613 carbon AEFMs and 204 to 14,214 nitrogen AEFMs. For the E. coli core and iAB RBC 283 networks, specifically, we enumerated 1000 times fewer carbon and nitrogen AEFMs than MEFMs. The resulting summary statistics describing the GEMs and ACHMCs are presented in Table 1. Across all carbon ACHMCs, we observed a broad increase in the total number of AEFMs as a function of metabolic network size. The one exception to this observation was the HepG2 network which contained fewer metabolites and reactions than iSB619, yet exhibited two orders of magnitude more carbon AEFMs. Inspection of the HepG2 network revealed it only contained 40 source metabolites compared to the 198 source metabolites in the iSB619 network, potentially indicating a greater degree of network connectivity among internal metabolites.

By focusing on an atom of interest, our ACHMC approach greatly reduced the number of EFMs to biologically relevant pathways involving nutrient source remodelling. This reduction in pathways resulted in AEFM enumeration times that were $10^3 - 10^4$ times faster than enumerating the MEFMs of the corresponding networks (Figure 3b). While running FluxModeCalculator in parallel did improve run times by 8.2-8.6 times (Figure S4), it remained over $10^1 - 10^2$ slower than enumerating the corresponding carbon and nitrogen AEFMs. One may think that expanding metabolites into metabolite-atom positions would increase the number of ACHMC states and therefore the computational run time. However, we found that the ACHMCs spanned less than 25% of the total number of metabolite-carbon or metabolite-nitrogen atom positions in any given network with the average carbon and nitro-

gen ACHMC transiting 0.41% and 1.7% of the total number of metabolite-atom positions, respectively (Figure S5).

Another computational benefit of our AEFM pipeline is the ability to parallelise AEFM enumeration within and across ACHMCs. Unlike MEFM enumeration which operates on the full metabolic network, ACHMCs can be constructed independently for each source metabolite atom. Plotting the serial run time as a function of the number of AEFMs, each point on Figure 3c corresponds to an individual carbon or nitrogen ACHMC belonging to one of the five GEMs. We observed two modes describing the run time complexity of the enumeration step of our pipeline. ACHMCs with fewer than 100 AEFMs exhibited serial run times within 0.1 milliseconds to 0.1 seconds. But for sufficiently large ACHMCs, we observed an approximately linear relationship between run time and the number of AEFMs in log-log space ($\text{slope} = 1.85, \text{intercept} = -6.54$). Assuming this relationship holds true for even larger GEMs, we predict ACHMCs with millions of AEFMs would take days to enumerate. However, our program is also parallelised on the level of individual ACHMCs. For the top 31 largest carbon ACHMCs in the HepG2 network, Figure 3d shows a median speedup of 7.9 times when using 16 or 32 threads.

Most AEFMs are source-to-sink pathways spanning dozens of reactions

We next turned to characterising the structural properties of all carbon and nitrogen AEFMs across the five GEMs. AEFMs can be divided into pathways that span source and sink metabolites or internal loops within the metabolic network such as pairs of reversible re-

actions. Both pathways have clear biological interpretations with source-to-sink pathways explaining the steady state flow of source metabolites on their way to exiting the network, and internally looped pathways corresponding to substrate remodelling/transport cycles. These pathways can be subclassified further into AEFMs that transit sets of distinct metabolites or those that revisit the same metabolite, albeit in different atomic positions. An example source-to-sink AEFM with this property is a glucose-derived carbon AEFM remodelling through two turns of the TCA cycle; on the second turn, the position of the carbon atom shifts within the TCA intermediates, resulting in different isotopomers (Duan et al, 2022) and therefore a source-to-sink pathway with a metabolite revisitation under our nomenclature.

To obtain a broad understanding of the types of AEFMs within the five GEMs, we categorised them into source-to-sink pathways and looped pathways with or without metabolite revisitations in different atomic positions. Figure 4a-b shows the counts for each AEFM type within each GEM. We observed that the majority of carbon AEFMs were source-to-sink pathways. Those without metabolite revisitations tended to scale as a function of network size with an 100-fold increase in source-to-sink pathways from the iSB619 to HepG2 network, for example. Investigation of these source-to-sink pathways confirmed that many source to sink pathways with metabolite revisitations involved TCA cycle intermediates. This was particularly true with the E. coli core network where 36% of all source-to-sink carbon AEFMs with metabolite revisitations passed through at least one of the nine TCA intermediates (i.e. citrate, cis-aconitate, ..., oxaloacetate). This figure increased to 96% when considering the source-to-sink carbon AEFMs with metabolite revisitations for the HepG2 network. Conversely, only 3% of source-to-sink carbon AEFMs *without* metabolite revisitations involved any of the nine TCA intermediates, suggesting that source-to-sink car-

bon AEFMs with metabolite revisitations corresponded to pathways that shuttled flux into and out of the TCA cycle via a combination of anapleurotic and catapleurotic reactions. Looped AEFMs without metabolite revisitations primarily corresponded to transport reactions cycling metabolites across compartments (see Figure 5 for examples) or acyltransferase reactions via acetyl-CoA and acyl carrier proteins. These observations explain, in part, why the iAB RBC 283 network contained the fewest number of pathways with metabolite revisitations. As demonstrated by the E. coli core and HepG2 network, the majority of source-to-sink pathways with metabolite revisitations comprise TCA cycle reactions which are absent from the iAB RBC 283 network. The lack of organelles, such as mitochondria, also eliminates cyclic AEFMs associated with inter-compartment metabolite transport or carbon transfers via acetyl-CoA and acyl carrier proteins. Lastly, we observed that there were very few internally looped AEFMs with metabolite revisitations with no obvious trend across the five GEMs. The greatest number of these pathways were found in the E. coli core network with a total of 261 cyclic carbon AEFMs with metabolite revisitations.

Our analysis of the nitrogen AEFMs showed that the majority of pathways did not involve any metabolite revisitations. Since there are many fewer nitrogen-containing metabolites in the five GEMs than carbon-containing ones, the majority of nitrogen AEFMs involved amino acid remodelling or transport between compartments. Looped pathways with metabolite revisitations were only observed in the iIT341 and iSB619 networks through reactions involving the production and consumption of ammonia.

We next investigated the lengths of the AEFMs, irrespective of their source-to-sink or looped type, and calculated the fraction of carbon and nitrogen AEFM lengths which are shown in Figure 4c-d. We found the distribution of carbon AEFM lengths to approximate

a bimodal distribution in the first four GEMs with some pathways that were extremely short in length (spanning 2-11 reactions) and others that were much larger. The carbon AEFM lengths of the HepG2 network appeared to exhibit a single Gaussian distribution ($\mu = 67.7$, $\sigma^2 = 16.2$), although closer inspection of the histogram revealed a small peak spanning 2-12 reactions in length. We hypothesised that looped AEFMs, such as those representing reversible reactions or inter-compartment transport, should involve fewer reactions than source-to-sink pathways which can span numerous internal metabolites. To determine whether these peaks were associated with source-to-sink and looped AEFM classes, we reclassified the carbon AEFMs spanning less than 5-12 reactions depending on the GEM (shorter pathways), and the remaining carbon AEFMs (longer pathways). We found that longer pathways were associated with source-to-sink pathways, with shorter pathways containing the majority of looped pathways. In fact, 65-97% of all longer pathways in each GEM were source-to-sink pathways with metabolite revisitations, with this statistic increasing to 95-100% when including source-to-sink pathways without metabolite revisitations (i.e. between 0-5% of longer pathways were cyclic with/without metabolite revisitations). We observed that shorter pathways were distributed more evenly between source-to-sink and looped AEFMs. Approximately 22% of all shorter pathways in the HepG2 network were looped with/without metabolite revisitations, although this figure increased to 58% in the iAB RBC 283 network and 68% in the iIT341 network. Analysis of the nitrogen AEFMs revealed only a single distribution of relatively short pathways due to the fewer number of nitrogen-containing metabolites across all GEMs.

We next considered how different atoms within the same source metabolite may follow different paths through the network, irrespective of their AEFM class. We first computed the

number of AEFMs for each carbon atom (resp. nitrogen atom). For each metabolite, we then identified the atom with the minimum number of AEFMs. Finally, we computed for every (other) atom the number of its AEFMs divided by that minimum number. So for example, a ratio of 10 means that one of the carbon atoms in the metabolite can transit the network in 10 times as many different ways as the carbon with the fewest paths through the network. Our results are shown in Figure 4e-f, where each dot corresponds to the ratio for a given atom in a given source metabolite. We found that a surprising number of carbons and nitrogens can transit different pathways within their respective source metabolites. For instance in the HepG2 network, the fifth (ϵ_2) carbon of the phenylalanine ring participates in 111,045 AEFMs compared to the backbone carbon which only flows through 5 AEFMs. Conversely, the amino acid backbone carbon of histidine in the HepG2 network participates in 111,039 AEFMs, while the third (ϵ) carbon of the imidazole ring only transits 135 AEFMs. Focusing on the source metabolites with carbon and nitrogen ratios over 100, we observed many of these corresponded to hydrophobic and positively-charged amino acids such as methionine and arginine in addition to phenylalanine and histidine. Source metabolites containing fewer carbons or nitrogens tended to exhibit ratios closer to 1 with AEFMs involving the same metabolite subsets. Metabolites such as glycine, for example, were equivalently metabolised across the same carbon AEFMs. For each GEM, and not counting source metabolites with ratios of one, we computed median carbon ratios between 2.0 and 41.8 and nitrogen ratios between 1.3 and 11.2. Overall, these findings highlight the varying degrees of metabolic flexibility for the atomic constituents of source metabolites to transit the metabolic network.

A minority of carbon AEFMs explains the majority of source metabolite remodelling

In the previous sections, we showed how to enumerate carbon and nitrogen AEFMs in large-scale networks and analyse the structure of these pathways. Yet, an equally important focus of our work is to determine the amount of flux moving through AEFMs. This computational question is biologically motivated by the desire to identify the most important pathways among the thousands to millions of AEFMs in large-scale networks. Furthermore, AEFMs with the greatest weight, and therefore carrying the most atomic flux, may correspond to existing or novel metabolic pathways that are upregulated in metabolic disorders (Lanpher et al, 2006) and environmental or bioprocessing conditions (Sacco & Young, 2021). In the context of the HepG2 network, which contains a single set of steady state fluxes estimated during the exponential growth phase (Nilsson et al, 2020b), it is well-known that cellular metabolism depends on the non-essential amino acid glutamine for survival and proliferation (Ye et al, 2023; Yoo et al, 2020). Hence, an AEFM analysis of glutamine carbon atoms may reveal alternative paths of glutamine metabolism and quantify the amount of flux moving through these pathways.

Using our full AEFM pipeline, we decomposed the set of steady state fluxes onto the 448,629 glutamine-derived carbon AEFMs characterising the HepG2 metabolic network. Figure 5a shows the cumulative explained mass flow of each glutamine carbon as a function of their AEFMs, ranked from greatest to smallest explained mass flow. Although our pipeline assigns some positive flux to every possible AEFM that a source metabolite atom may follow, we found that, depending on which carbon atom in glutamine, 99% of its flow

could be explained by the top 0.5% of AEFMs or fewer. These results suggested that the majority of glutamine carbon remodelling is explained by a surprisingly small number of glutamine-derived carbon AEFMs. The top 5 ranked AEFMs across each glutamine carbon (25 pathways altogether) explained nearly half (43.9%) of the total glutamine carbon mass flow with the subsequent 5 next highest ranked AEFMs only explaining an additional 8.1% glutamine carbon mass flow. These observations were consistent across carbon AEFMs derived from other amino acids, as well as glucose, leading us to hypothesise that steady state pathway fluxes are centralised to a relatively small subset of AEFMs (Figure S6).

To obtain a high-level understanding of the dominant pathways of glutamine carbon remodelling, we constructed a metabolic subnetwork from the top 5 glutamine carbon AEFMs, collapsing metabolite-atom positions onto distinct metabolites, since none of these AEFMs involved metabolite revisitations. Of the 435 metabolites in the HepG2 dataset, input glutamine can remodel into 203 species localised to the cytosol or mitochondria. We found that the top 5 glutamine-derived carbon AEFMs consist of just 22 metabolites and 29 reactions (Figure 5b). These AEFMs generally consisted of cyclic pathways involving TCA intermediates. We found several source-to-sink AEFMs involving the production of carbon dioxide via the decarboxylation of isocitrate in the cytosol and alpha-ketoglutarate in the mitochondria.

As AEFMs are steady state pathways, they can be visualised as Sankey diagrams to better understand the atomic fluxes through the atomic flux graphs. Figure 5c-e shows the top 5 AEFMs for each glutamine carbon. Each AEFM in the diagram is shown as a flow proportional to its AEFM weight, with nodes representing the metabolite transited by the given glutamine carbon. Although each glutamine carbon can transit a different number of AEFMs, we found that the top 5 backbone carbons for the first three sidechain carbons were

identical in AEFM pathway with approximately the same weights.

Focusing on the first glutamine carbon in Figure 5c, we observed that AEFMs with the greatest weight corresponded to well-established metabolic subsystems. The first, third, and fourth AEFMs, for example, corresponded to aspects of the malate-aspartate shuttle. The fifth AEFM involved glutamine remodelling into alpha-ketoglutarate and entering the canonical TCA cycle and leaving as carbon dioxide via isocitrate. We also noticed that the second largest AEFM cycled carbon mass flow between TCA intermediates citrate, oxaloacetate, and malate located within the cytosol and mitochondria. Interestingly, this metabolic pathway corresponds to the recently discovered non-canonical TCA activity described by Arnold et al, who validated this pathway in non-small cell lung cancer, mouse embryonic, and C2C12 mouse myoblast cells by stable isotope tracing analysis (Arnold et al, 2022). This non-canonical TCA activity was further observed in glutamine carbons 2-4 in the second AEFM (Figure 5d). We also found first, third, fourth, and fifth AEFMs in in Figure 5d-e corresponded to the malate-asparate shuttle. The terminal glutamine carbon in Figure 5e contained three source-to-sink AEFMs that either transported glutamine out of the system or decarboxylated it into carbon dioxide via alpha-ketoglutarate.

Thus far, we have shown that our analyses revealed that the most active glutamine-derived carbon AEFM weights corresponded to well-known metabolic subsystems. This finding led us to ask whether we could summarise our AEFM analysis as a simplified metabolic model describing over 40% of the glutamine carbon remodelling in the HepG2 flux network. We present the resulting schematic in Figure 5f which consists of the following three major metabolic pathways: canonical TCA cycle, non-canonical TCA cycle, and the malate-aspartate shuttle. The overall schematic suggests that input glutamine is primarily

routed into the mitochondria via aspartate/glutamate antiporters encoded by the *SLC25A12* and *SLC25A13* transporters annotated in the HepG2 metabolic model. This mitochondrial glutamate is used to regenerate TCA cycle intermediates by converting glutamate into alpha-ketoglutarate, which is subsequently consumed in the canonical TCA cycle to produce carbon dioxide and NADH/ATP/$FADH_2$. More importantly, a greater proportion of glutamate appears to be recycled through the non-canonical TCA cycle, which does not generate NADH, but actively transports existing NADH from the cytosol into the mitochondrial. Taken together, the dominant carbon AEFMs predicted by our model suggest HepG2 glutamine both fuels TCA cycle activity and regulates cellular levels of NAD^+/NADH.

Discussion

Since the proposal of MEFMs, much effort has been made to enumerate and decompose steady state metabolic fluxes onto these pathways. By defining EFMs with respect to individual atoms rather than molecules, we introduced the AEFM which describes how atomic constituents are remodelled within a metabolic flux network. As AEFMs never involve branching pathways, they may be easier to interpret than their molecular EFM counterparts, which typically involve multiple inputs and outputs to balance molecular stoichiometries. Using the atom mapping program RXNMapper, we adapted our previously described CHMC method to efficiently enumerate carbon and nitrogen AEFMs in five GEMs and characterise source metabolite remodelling at the atomic level. We empirically observed the number of carbon and nitrogen AEFMs to be several orders of magnitude smaller than the MEFMs of the corresponding metabolic flux networks, which were too numerous to enu-

merate except for the smallest *E. coli* core and human red blood cell models. We further found that the majority of AEFMs encoded source-to-sink pathways with carbon pathways often involving multiple revisitations of a given metabolite along different atomic positions. By comparing the number of AEFMs across atoms within the same source metabolite, we revealed how certain amino acids displayed remarkable variability in the number of pathways transited by their constituent atoms. This analysis, in particular, may be useful for designing non-uniformly labelled stable isotope tracers to identify fluxes within specific metabolic subsystems. Our final AEFM weight analysis of the HepG2 network revealed that the majority of glutamine carbons were remodelled via well-known metabolic pathways such as the canonical TCA cycle but also novel pathways such as non-canonical TCA activity which has not been previously described in HepG2 cells.

The problem of MEFM enumeration has historically limited their applicability to small-scale networks. Many algorithmic advances have improved MEFM enumeration, yet never feasibly beyond networks with > 100 metabolites and reactions (Kamp & Schuster, 2006; Terzer & Stelling, 2008; van Klinken & Willems van Dijk, 2016). Molecular EFM enumeration is generally regarded as infeasible for large-scale networks—so much so that numerous methods have been developed to enumerate a subset of MEFMs constrained by pathway length (de Figueiredo et al, 2009a), reaction thermodynamics (Gerstl et al, 2015), participating metabolites (Pey & Planes, 2014), participating reactions (Kaleta et al, 2009), gene regulatory rules (Jungreuthmayer et al, 2013), metabolic subsystems (Schuster et al, 2002; Schwartz et al, 2007), extracellular flux measurements (Soons et al, 2011; Jungers et al, 2011), or even random sampling (Machado et al, 2012). While our HepG2 results did show the majority of source metabolite fluxes were explained by a small number of relatively

short AEFMs, verifying which are the most dominant pathways is only possible when all are enumerated. Furthermore, reaction thermodynamics, gene regulatory rules, and other constraints used to identify these EFM subsets may change across different biological conditions. By computing AEFMs instead, we could feasibly enumerate these pathways in large-scale networks containing hundreds of metabolites and reactions within minutes to hours on consumer-grade computing hardware. We are hopeful that algorithmic tricks borrowed from MEFM enumeration tools, such as linear pathway compression, could further decrease memory usage and run times.

Aside from carbon and nitrogen AEFMs, our work is broadly applicable to other types of chemical elements. One could feasibly enumerate oxygen or hydrogen AEFMs in small-scale networks, although the significance of these pathways is unclear for biochemical networks, given the ubiquitous nature of these atoms. We also caution against enumerating hydrogen AEFMs, in particular, given limitations associated with RXNMapper. Unless explicitly represented in the reaction SMILES string, RXNMapper does not assign hydrogen atom mappings. Moreover, RXNMapper cannot map atoms in reaction SMILES strings longer than 512 characters, so our pipeline inherits that limitation. Our method could equally be applied to study sulphur metabolism to quantify methionine or cysteine remodelling, or phosphorus metabolism to quantify nucleotide synthesis. Outside the realm of biochemistry, our method is applicable to any periodic table element and possibly relevant for studying general chemical reaction networks.

Our AEFM framework opens many new computational problems in metabolism. While we analysed one set of fluxes for the HepG2 network, one could envision a differential AEFM analysis of flux distributions across distinct conditions (Galuzzi et al, 2024; Li et al, 2025;

Ravi & Gunawan, 2021). These differential AEFMs may reveal changes in metabolic subsystem activity or predict new pathways of source metabolite remodelling. For instance, analysing carbon AEFMs of C1 compounds may be prove useful for identifying or designing carbon fixation pathways in C1-utilising organisms (Ata & Mattanovich, 2024). Another important question is whether a joint analysis of AEFM weights could reveal broader metabolic changes within a condition. We observed that many AEFMs across distinct source metabolites converged on common internal metabolites. Intuitively, the weights of AEFMs rooted on different source metabolites, but sharing common downstream metabolite subsequences, should be related, and these relationship may further speed AEFM enumeration or weight computations. Finally, more work is needed to establish relationships between AEFM decompositions and more traditional MEFM decompositions of fluxes, and to explore the possibility that feasible AEFM calculations might somehow aid in MEFM calculations.

Materials and Methods

Methods and Protocols

The following subsections describe in greater detail the datasets and pipeline steps referenced in Figure 2.

Step 1: GEM acquisition, encoding, and atom mapping

Step 1a: Datasets. Five curated GEMs were chosen in this study to reflect a diversity of organisms, metabolites and biochemical reactions. Four networks were obtained from the BiGG UCSD database (King et al, 2016) in ascending order of network size. Datasets were

downloaded as SBML (.xml) files, and the corresponding stoichiometry matrices, metabolites and reactions were extracted using the Julia SBML.jl package. The HepG2 liver cancer cell line dataset was chosen for its single set of steady state fluxes estimated from a FBA with external fluxes constrained by time-resolved exometabolomic measurements of glucose, pyruvate, lactate, and various amino acids. These cells were grown in DMEM with 10% fetal calf serum, 22mM glucose, and 1.8mM glutamine (Nilsson et al, 2020b). The steady state fluxes were computed from a piecewise FBA model provided by the authors (figure3_metabolitebalances.m; MATLAB R2018a) (Nilsson et al 2020b; Data ref: Nilsson et al 2020a). Across all models, we modelled all reversible reactions as net forward reactions to simplify the number of MEFMs and AEFMs because the majority of experimental and computational methods can only estimate net fluxes. We assumed the reaction stoichiometries of the BiGG datasets represented the canonical net directions of all reversible reactions. For the HepG2 dataset, the net directions were chosen based on the net fluxes estimated from the FBA model.

Step 1b: Extracting metabolites SMILES strings. SMILES structures were not encoded in the BiGG SBML files nor the HepG2 dataset. Thus, we manually extracted SMILES strings corresponding to each metabolite across all GEMs. Isomeric SMILES strings were taken from PubChem (Kim et al, 2023), the Human Metabolome Database (Wishart et al, 2022), or MetaNetX database (Moretti et al, 2021). Metabolites shared across GEMs were assigned the same SMILES structure in addition to identical metabolites stratified across distinct subcellular compartments. Generic structures such as R-groups were not modelled in this study and were replaced with a single bonded hydrogen under the assumption this

modification would not alter atom mappings, especially since RXNMapper does not map hydrogen atoms unless they are explicitly represented in the SMILES strings. SMILES strings were also not assigned to metabolites with ambiguous structures nor pseudometabolites with no known chemical structure. All pseudometabolites and reactions involving pseudometabolites were removed from the stoichiometry matrix (Table 2).

Step 1c: Constructing reaction SMILES strings. RXNMapper performs atom mapping on a string that encodes the SMILES structures of all substrates and products for a given reaction. These reaction SMILES strings are constructed by concatenating SMILES strings of individual substrates and products. Multiple substrates or products are separated by the symbol '.', while the reaction arrow delimiting substrates and products is denoted by the symbol '>>'. The substrate and product SMILES strings are concatenated in order of metabolite appearance within the stoichiometry matrix, and multiple stoichiometric copies are consecutively repeated in the reaction SMILES strings. Non-integer stoichiometric coefficients are therefore not allowed and these pseudoreactions were removed from the stoichiometry matrix (see Table 2). To maintain steady state flux in the HepG2 network, fluxes along pseudoreactions were replaced with unimolecular source and sink fluxes consuming each pseudoreaction substrate and producing each pseudoreaction product.

Step 1d: Pre-processing genome-scale metabolic models. Several pre-processing steps were required to compute AEFMs from the GEMs. The stoichiometric coefficients of external reactions were set to one and their fluxes rescaled to carry equivalent units of source and sink metabolites. All reactions containing pseudometabolites with no known SMILES

strings were removed from the stoichiometry matrix and replaced with unimolecular source and sink reactions carrying equivalent units of flux. The same procedure was also applied to reactions containing non-integer stoichiometries. These pseudometabolites were next removed from the stoichiometry matrix rows, and unimolecular reactions involving the same external or internal metabolites were aggregated. Finally, we had to remove a small number of reactions whose SMILES strings exceeded the 512 token limit of RXNMapper. These reactions were likewise converted into unimolecular source and sink reactions to maintain steady state flux across the network (see Table 2). All pre-processing steps described above are wrapped into convenience functions within our Julia package MarkovWeightedEFMs.jl.

Step 1e: running RXNMapper to map atomic movements across reactions. After GEM pre-processing, RXNMapper was used to predict the atom mappings across reaction SMILES strings. The output of RXNMapper is a mapped reaction SMILES string with numeric indices indicating the atomic movements from substrate to product side of each reaction SMILES string. We manually checked all central carbon metabolism reactions to ensure the assigned atom mappings were correct. Crucially, we found RXNMapper failed on nearly all classes of ATP-independent transaminase reactions. This problem has previously been reported in an atom mapping benchmark study prior to the publication of RXNMapper (Preciat Gonzalez et al, 2017). These transaminase reactions were identified in all metabolic networks and manually atom mapped based on the KEGG reaction mappings (Figure S7). Additionally, the reactions converting citrate to isocitrate (aconitate hydratase) and alpha-ketoglutarate to succinyl-CoA required manual curation.

We then stored these curated atom mapping predictions in a GEM and atom type-specific

atom mapping dictionary. Each key corresponds to a substrate-atom uniquely defined by its (i) metabolite index within the stoichiometry matrix, (ii) ordinal occurrence of that atom type within the substrate SMILES string, (iii) substrate stoichiometric copy, and (iv) reaction index within the stoichiometry matrix. The values of this dictionary are the corresponding product-atom positions uniquely defined by the (i) metabolite index within the stoichiometry matrix and (ii) ordinal occurrence of that atom type in the product SMILES string.

Step 2: Defining the atomic flux graphs

From the atom-mapping dictionary, we then construct atomic flux graphs rooted on each source metabolite-atom position. Intuitively, each node in the graph corresponds to a specific atom in a metabolite, and each weighted edge from one node to another expresses the flux of the reaction causing that transformation. Starting with the source metabolite-atom position, we search the atom-mapping dictionary to determine the participating reactions and product metabolite-atom positions. For reactions involving a single stoichiometric copy of each substrate and product, the atom of interest will always transition from a unique substrate metabolite-atom position to product metabolite-atom position. If this atom is present in a reaction with multiple substrate stoichiometric copies, we assume there is an equal probability of that atom occurring in either substrate stoichiometric copy. Depending on the substrate stoichiometric position, the atom may (i) transition to different product metabolite-atom positions, (ii) the same product metabolite but at different atomic positions, or (iii) the same product metabolite-atom position. In all cases, we set the atomic flux of the atom transitioning from either stoichiometric copy equal to the reaction fluxes to maintain atomic mass conservation (Figure S1). The resulting atomic flux graph is com-

pleted by connecting any sink fluxes back to the root of the tree initialised on the source metabolite-atom position. This final procedure is solely for computational convenience and is mathematically identical to the open system with source and sinks.

Step 3: Building the ACHMC model and enumerating AEFMs

The atomic flux graphs described in the previous step satisfy all conditions required to construct the corresponding ACHMC. Specifically, these conditions are that the input flux network is a closed-loop graph that is strongly connected with conserved edge weights such that the sum of weights entering and exiting each node are balanced (Chitpin & Perkins, 2023). However, for computational efficiency, our software implementation does not actually construct the atomic flux graph explicitly. Rather, it runs an ACHMC analysis directly from the metabolic flux network and the atom mapping dictionary. Starting at an initial metabolite-atom position, we apply a depth-first search algorithm (Algorithm 1) to recursively enumerate sequences of transited metabolite-atom positions stemming from the initial source metabolite atom. Following Chitpin & Perkins, we denote state S in the ACHMC to represent the simple path of metabolite-atom transitions in the trie $s_0, s_1, \ldots, s_m$. Linear AEFMs (simple paths) are enumerated by finding all states S (sequences of metabolite-atom positions) that can no longer transition to a longer simple path (leaves within the trie). Internally-looped AEFMs (simple cycles) are enumerated by finding all prefixes that are capable of transitioning to a shorter simple path within the trie.

Algorithm 1 Depth-first construction of the ACHMC trie

Input: Input state s_{im} denoting an atom in position i of metabolite m, dictionary D mapping $\{s_{im}\}_r$ to $\{s_{jn}\}_r$ in reaction r, stoichiometry matrix S, steady state reaction flux vector v

Output: Dictionary T encoding the ACHMC trie

```
function TRAVERSE_TRIE(s_im, D, S, v)
    V ← {s_im} Array of visited metabolite-atom positions
    W ← V[end]
    T ← {}  where T[Prefix] ← {Children, Children values, Parent, Parent values}
    R ← reaction indices in S where W participates as a substrate
    s_out ← {D[W]}_{r∈R}
    s_down ← s_out ∉ V
    s_up ← s_out ∈ V
    Add {s_down, v[r ∈ R], s_up, v[r ∉ R]} to T[V]
    for s ∈ s_down do
        TRAVERSE_TRIE({V, s}, D, S, v)
```

Step 4: Computing AEFM weights in the HepG2 network

To compute AEFM weights, we encode the ACHMC trie into a sparse transition probability matrix T. Each element $T_{S,S'}$ corresponds to the probability of an atom in state $S \equiv s_0, s_1, \ldots, s_m$ (representing a sequence of metabolite-atom positions that the atom has transited) transitioning to either state $S' \equiv s_0, s_1, \ldots, s_m, s_{m+1}$ (representing a one-step longer sequence) or state $S' \equiv s_0, s_1, \ldots, s_i$ if s_{m+1} is among $s_0, s_1, \ldots, s_m$ (representing a return to a previous metabolite-atom position). The transition probabilities are set proportional to the outgoing fluxes in the trie such that $\sum_{S' \notin S} T_{S,S'} = 1$.

The AEFM probabilities are computed by steady state analysis of the ACHMC transition probability matrix (Chitpin & Perkins, 2023). For AEFM k, we identify all transitions in the ACHMC that close the simple cycle E_k. For linear AEFMs, E_k always corresponds to one transition; however, internally looped AEFMs may contain multiple transitions within E_k. The steady state probability of transiting AEFM k is defined as the sum of steady state

probabilities of those transitions or:

$$P_k = \sum_{(S,S') \in E_k} \pi_S \cdot T_{S,S'} \tag{1}$$

Each node in the ACHMC trie corresponds to a whole sequence of metabolite-atom positions that an atom might pass through. The children of a node correspond to either: a one-step-longer path or a loop back to a previously-visited metabolite-atom position. The probabilities of those transitions are proportional to the fluxes of the corresponding reactions. Some nodes correspond to entire AEFMs—specifically those that are paths from the initial metabolite-atom position to any sink within the network. Treating each node of the trie as a state in a Markov chain, we compute steady state probabilities of every node. The flux weight of any given AEFM is proportional to the steady state probability of the node representing that full AEFM path. See Chitpin & Perkins for details.

Benchmarking the enumeration of atomic-versus-standard EFMs

We benchmarked our Julia package MarkovWeightedEFMs.jl version 2.0 running Julia version 1.10.2 to enumerate AEFMs. We ran the MEFM enumeration program FluxModeCalculator (van Klinken & Willems van Dijk (2016)) running MATLAB version R2018a with default parameters, including network compression. We chose FluxModeCalculator because it is the state-of-the-art program for enumerating MEFMs. Benchmarks were performed on a 64-bit Linux operating system with 64GB of memory and an AMD 5950X CPU with 16 cores/32 threads. All benchmarks reported the wall time to run the AEFM or MEFM enumeration functions and did not include startup times to open Julia/MATLAB, precom-

pile Julia functions, or load packages and input data. A benchmark time of 'did not finish' (DNF) was assigned if either program could not complete (A)EFM enumeration within 7 days.

Data availability

Our software package MarkovWeightedEFMs.jl is available at `https://github.com/jchitpin/MarkovWeightedEFMs.jl`. All source codes to reproduce this study are available at `https://www.github.com/jchitpin/reproduce-efm-paper-2024`.

Acknowledgements

This research was supported by the Natural Sciences and Engineering Research Council of Canada (NSERC), Discovery grant RGPIN/06604-2019 and a Digital Research Alliance of Canada (DRAC) Resources for Research Groups grant to TJP (RRG-TPERKINS). J.G.C. was supported by an NSERC CREATE Matrix Metabolomics Scholarship, NSERC Alexander Graham Bell Canada Graduate Scholarship, and Ontario Graduate Scholarship. The authors also thank the anonymous reviewers for their helpful comments.

Author contributions

Justin G. Chitpin: Conceptualisation; data curation; methodology; software; formal analysis; investigation; visualisation; writing - original draft; writing - review and editing.

Theodore J. Perkins: Conceptualisation; methodology; supervision; funding acquisition; investigation; project administration; writing - review and editing.

Disclosure and competing interests statement

The authors declare no competing interests.

References

Acuña V, Chierichetti F, Lacroix V, Marchetti-Spaccamela A, Sagot MF, Stougie L (2009) Modes and cuts in metabolic networks: complexity and algorithms. *BioSystems* 95: 51–60

Ahn E, Kumar P, Mukha D, Tzur A, Shlomi T (2017) Temporal fluxomics reveals oscillations in TCA cycle flux throughout the mammalian cell cycle. *Mol Syst Biol* 13: 953

Algfoor ZA, Sunar MS, Abdullah A, Kolivand H (2017) Identification of metabolic pathways using pathfinding approaches: a systematic review. *Brief Funct Genomic Proteomic* 16: 87–98

Antoniewicz MR (2018) A guide to 13C metabolic flux analysis for the cancer biologist. *Exp Mol Med* 50: 1

Arita M (2000) Metabolic reconstruction using shortest paths. *Simul Model Pract Theory* 8: 109–125

Arita M (2003) In silico atomic tracing by substrate-product relationships in escherichia coli intermediary metabolism. *Genome Res* 13: 2455–2466

Arnold PK, et al (2022) A non-canonical tricarboxylic acid cycle underlies cellular identity. *Nature* 603: 477–481

Ata Mattanovich D (2024) Into the metabolic wild: Unveiling hidden pathways of microbial metabolism. *Microb Biotechnol* 17: e14548

Basan M, Hui S, Okano H, Zhang Z, Shen Y, Williamson JR, Hwa T (2015) Overflow metabolism in Escherichia coli results from efficient proteome allocation. *Nature* 528: 99–104

Becker SA, Palsson BØ (2005a) BiGG http://bigg.ucsd.edu/models/isb619. [DATASET]

Becker SA, Palsson BØ (2005b) Genome-scale reconstruction of the metabolic network in Staphylococcus aureus N315: an initial draft to the two-dimensional annotation. *BMC Microbiol* 5: 8

Bordbar A, Jamshidi N, Palsson BØ (2011a) BiGG (http://bigg.ucsd.edu/models/iab_rbc_283). [DATASET]

Bordbar A, Jamshidi N, Palsson BØ (2011b) iAB-RBC-283: a proteomically derived knowledge-base of erythrocyte metabolism that can be used to simulate its physiological and patho-physiological states. *BMC Syst Biol* 5: 110

Brunk E, et al (2018) Recon3D enables a three-dimensional view of gene variation in human metabolism. *Nat Biotechnol* 36: 272–281

Buchner BA, Zanghellini J (2021) EFMlrs: a python package for elementary flux mode enumeration via lexicographic reverse search. *BMC Bioinformatics* 22: 547

Buescher JM, et al (2015) A roadmap for interpreting 13C metabolite labeling patterns from cells. *Curr Opin Biotechnol* 34: 189–201

Cherkaoui S, et al (2022) A functional analysis of 180 cancer cell lines reveals conserved intrinsic metabolic programs. *Mol Syst Biol* 18: e11033

Chitpin JG, Perkins TJ (2023) A Markov constraint to uniquely identify elementary flux mode weights in unimolecular metabolic networks. *J Theor Biol* 575: 111632

Croes D, Couche F, Wodak SJ, van Helden J (2006) Inferring meaningful pathways in weighted metabolic networks. *Journal of molecular biology* 356: 222–236

de Figueiredo LF, Podhorski A, Rubio A, Kaleta C, Beasley JE, Schuster S, Planes FJ (2009a) Computing the shortest elementary flux modes in genome-scale metabolic networks. *Bioinformatics* 25: 3158–3165

de Figueiredo LF, Schuster S, Kaleta C, Fell DA (2009b) Can sugars be produced from fatty acids? A test case for pathway analysis tools. *Bioinformatics* 25: 152–158

Duan L, Cooper DE, Scheidemantle G, Locasale JW, Kirsch DG, Liu X (2022) 13C tracer analysis suggests extensive recycling of endogenous CO2 in vivo. *Cancer Metab* 10: 1–11

Emwas AH, Szczepski K, Al-Younis I, Lachowicz JI, Jaremko M (2022) Fluxomics - new metabolomics approaches to monitor metabolic pathways. *Front Pharmacol* 13: 805782

Endo Y, Kanno T, Nakajima T (2022) Fatty acid metabolism in T-cell function and differentiation. *Int Immunol* 34: 579–587

Fakih I, Got J, Robles-Rodriguez CE, Siegel A, Forano E, Muñoz-Tamayo R (2023) Dynamic genome-based metabolic modeling of the predominant cellulolytic rumen bacterium Fibrobacter succinogenes S85. *mSystems* 8: e0102722

Franchina DG, et al (2022) Glutathione-dependent redox balance characterizes the distinct metabolic properties of follicular and marginal zone B cells. *Nat Commun* 13: 1789

Gagneur J, Klamt S (2004) Computation of elementary modes: a unifying framework and the new binary approach. *BMC Bioinformatics* 5: 175

Galuzzi BG, Milazzo L, Damiani C (2024) Adjusting for false discoveries in constraint-based differential metabolic flux analysis. *J Biomed Inform* 150: 104597–104597

Gelbach PE, Cetin H, Finley SD (2024) Flux sampling in genome-scale metabolic modeling of microbial communities. *BMC Bioinformatics* 25: 45

Gerstl MP, Ruckerbauer DE, Mattanovich D, Jungreuthmayer C, Zanghellini J (2015) Metabolomics integrated elementary flux mode analysis in large metabolic networks. *Sci Rep* 5: 8930

González-Arrué N, Inostroza I, Conejeros R, Rivas-Astroza M (2023) Phenotype-specific estimation of metabolic fluxes using gene expression data. *iScience* 26: 106201

Gustafsson J, Roshanzamir F, Hagnestål A, Patel SM, Daudu OI, Becker DF, Robinson JL, Nielsen J (2024) Metabolic collaboration between cells in the tumor microenvironment has a negligible effect on tumor growth. *Innovation* 5: 100583

Hafner J, Hatzimanikatis V (2021) NICEpath: finding metabolic pathways in large networks through atom-conserving substrate–product pairs. *Bioinformatics* 37: 3560–3568

Huang Y, Mohanty V, Dede M, Tsai K, Daher M, Li L, Rezvani K, Chen K (2023) Characterizing cancer metabolism from bulk and single-cell RNA-seq data using METAFlux. *Nat Commun* 14: 4883

Jackson BT, Finley LWS (2024) Metabolic regulation of the hallmarks of stem cell biology. *Cell Stem Cell* 31: 161–180

Jungers RM, Zamorano F, Blondel VD, Wouwer AV, Bastin G (2011) Fast computation of minimal elementary decompositions of metabolic flux vectors. *Automatica* 47: 1255–1259

Jungreuthmayer C, Ruckerbauer DE, Zanghellini J (2013) regEfmtool: speeding up elementary flux mode calculation using transcriptional regulatory rules in the form of three-state logic. *BioSystems* 113: 37–39

Kaleta C, de Figueiredo LF, Schuster S (2009) Can the whole be less than the sum of its parts? Pathway analysis in genome-scale metabolic networks using elementary flux patterns. *Genome Res* 19: 1872–1883

Kamp Av, Schuster S (2006) Metatool 5.0: fast and flexible elementary modes analysis. *Bioinformatics* 22: 1930–1931

Kaste JAM, Shachar-Hill Y (2023) Accurate flux predictions using tissue-specific gene expression in plant metabolic modeling. *Bioinformatics* 39

Kim S, et al (2023) PubChem 2023 update. *Nucleic Acids Res* 51: D1373–D1380

King ZA, Lu J, Dräger A, Miller P, Federowicz S, Lerman JA, Ebrahim A, Palsson BØ, Lewis NE (2016) BiGG Models: a platform for integrating, standardizing and sharing genome-scale models. *Nucleic Acids Res* 44: D515–D522

Kochanowski K, Okano H, Patsalo V, Williamson J, Sauer U, Hwa T (2021) Global coordination of metabolic pathways in Escherichia coli by active and passive regulation. *Mol Syst Biol* 17: e10064

Lanpher B, Brunetti-Pierri N, Lee B (2006) Inborn errors of metabolism: the flux from mendelian to complex diseases. *Nat Rev Genet* 7: 449–459

Lee JY, Han Y, Styczynski MP (2023) Towards inferring absolute concentrations from relative abundance in time-course GC-MS metabolomics data. *Mol Omics* 19: 126–136

Lee WD, Mukha D, Aizenshtein E, Shlomi T (2019) Spatial-fluxomics provides a subcellular-compartmentalized view of reductive glutamine metabolism in cancer cells. *Nat Commun* 10: 1351

Li X, Walhout AJM, Yilmaz LS (2025) Enhanced flux potential analysis links changes in enzyme expression to metabolic flux. *Mol Syst Biol* 21: 413–445

Machado D, Soons Z, Patil KR, Ferreira EC, Rocha I (2012) Random sampling of elementary flux modes in large-scale metabolic networks. *Bioinformatics* 28: i515–i521

Matsuda F, Furusawa C, Kondo T, Ishii J, Shimizu H, Kondo A (2011) Engineering strategy of yeast metabolism for higher alcohol production. *Microb Cell Fact* 10: 70

McKinlay JB, Harwood CS (2010) Carbon dioxide fixation as a central redox cofactor recycling mechanism in bacteria. *Proc Natl Acad Sci USA* 107: 11669–11675

McShan D, Rao S, Shah I (2003) PathMiner: predicting metabolic pathways by heuristic search. *Bioinformatics* 19: 1692–1698

Moretti S, Tran V, Mehl F, Ibberson M, Pagni M (2021) MetaNetX/MNXref: unified namespace for metabolites and biochemical reactions in the context of metabolic models. *Nucleic Acids Res* 49: D570–D574

Mpabanzi L, et al (2022) Fluxomics reveals cellular and molecular basis of increased renal ammoniagenesis. *NPJ Syst Biol Appl* 8: 49

Nilsson A, Haanstra JR, Engqvist M, Gerding A, Bakker BM, Klingmüller U, Teusink B, Nielsen J (2020a) GitHub (https://github.com/sysbiochalmers/livercellmetabolismsimulation). [DATASET]

Nilsson A, Haanstra JR, Engqvist M, Gerding A, Bakker BM, Klingmüller U, Teusink B, Nielsen J (2020b) Quantitative analysis of amino acid metabolism in liver cancer links glutamate excretion to nucleotide synthesis. *Proc Natl Acad Sci USA* 117: 10294–10304

Nobile MS, Coelho V, Pescini D, Damiani C (2021) Accelerated global sensitivity analysis of genome-wide constraint-based metabolic models. *BMC Bioinformatics* 22: 78

Orth JD, Fleming RMT, Palsson BØ (2010a) BiGG (http://bigg.ucsd.edu/models/e_coli_core). [DATASET]

Orth JD, Fleming RMT, Palsson BØ (2010b) Reconstruction and use of microbial metabolic

networks: the core Escherichia coli metabolic model as an educational guide. *Ecosal Plus* 4

Pey J, Planes FJ (2014) Direct calculation of elementary flux modes satisfying several biological constraints in genome-scale metabolic networks. *Bioinformatics* 30: 2197–2203

Pey J, Prada J, Beasley JE, Planes FJ (2011a) Path finding methods accounting for stoichiometry in metabolic networks. *Genome Biol* 12: R49–R49

Pey J, Rubio A, Theodoropoulos C, Cascante M, Planes FJ (2012) Integrating tracer-based metabolomics data and metabolic fluxes in a linear fashion via elementary carbon modes. *Metab Eng* 14: 344–353

Pey J, Theodoropoulos C, Rezola A, Rubio A, Cascante M, Planes FJ (2011b) Do elementary flux modes combine linearly at the "atomic" level? integrating tracer-based metabolomics data and elementary flux modes. *BioSystems* 105: 140–146

Preciat Gonzalez GA, El Assal LRP, Noronha A, Thiele I, Haraldsdóttir HS, Fleming RMT (2017) Comparative evaluation of atom mapping algorithms for balanced metabolic reactions: application to recon 3D. *J Cheminform* 9: 39

Rahman SA, Advani P, Schunk R, Schrader R, Schomburg D (2004) Metabolic pathway analysis web service (Pathway Hunter Tool at CUBIC). *Bioinformatics* 21: 1189–1193

Ravi S, Gunawan R (2021) ΔFBA—Predicting metabolic flux alterations using genome-scale metabolic models and differential transcriptomic data. *PLoS Comput Biol* 17: e1009589–e1009589

Robinson JL, et al (2020) An atlas of human metabolism. *Sci Signal* 13: eaaz1482

Sacco SA, Young JD (2021) 13C metabolic flux analysis in cell line and bioprocess development. *Curr Opin Chem Eng* 34: 100718–100718

Sanford K, Soucaille P, Whited G, Chotani G (2002) Genomics to fluxomics and physiomics – pathway engineering. *Curr Opin Microbiol* 5: 318–322

Schuetz R, Zamboni N, Zampieri M, Heinemann M, Sauer U (2012) Multidimensional optimality of microbial metabolism. *Science* 336: 601–604

Schuster S, Dandekar T, Fell DA (1999) Detection of elementary flux modes in biochemical networks: a promising tool for pathway analysis and metabolic engineering. *Trends Biotechnol* 17: 53–60

Schuster S, Hilgetag C (1994) On elementary flux modes in biochemical reaction systems at steady state. *J Biol Syst* 2: 165–182

Schuster S, Pfeiffer T, Moldenhauer F, Koch I, Dandekar T (2002) Exploring the pathway structure of metabolism: decomposition into subnetworks and application to Mycoplasma pneumoniae. *Bioinformatics* 18: 351–361

Schwaller P, Hoover B, Reymond JL, Strobelt H, Laino T (2021) Extraction of organic chemistry grammar from unsupervised learning of chemical reactions. *Sci Adv* 7: eabe4166

Schwartz JM, Gaugain C, Nacher JC, de Daruvar A, Kanehisa M (2007) Observing metabolic functions at the genome scale. *Genome Biol* 8: R123–R123

Schwartz JM, Kanehisa M (2006) Quantitative elementary mode analysis of metabolic pathways: the example of yeast glycolysis. *BMC Bioinformatics* 7: 186

Soons ZI, Ferreira EC, Rocha I (2011) Identification of minimal metabolic pathway models consistent with phenotypic data. *J Process Control* 21: 1483–1492

Stern A, Fokra M, Sarvin B, Alrahem AA, Lee WD, Aizenshtein E, Sarvin N, Shlomi T (2023) Inferring mitochondrial and cytosolic metabolism by coupling isotope tracing and deconvolution. *Nat Commun* 14: 7525–7525

Terzer M, Stelling J (2008) Large-scale computation of elementary flux modes with bit pattern trees. *Bioinformatics* 24: 2229–2235

Thiele I, Vo TD, Price ND, Palsson BØ (2005a) BiGG (http://bigg.ucsd.edu/models/iit341). [DATASET]

Thiele I, Vo TD, Price ND, Palsson BØ (2005b) Expanded metabolic reconstruction of Helicobacter pylori (IT341 GSM/GPR): an in silico genome-scale characterization of single- and double-deletion mutants. *J Bacteriol* 187: 5818–5830

Toya Y, Shimizu H (2022) Metabolic pathway engineering for the non-growth-associated succinate production in Escherichia coli based on flux solution space. *J Biosci Bioeng* 134: 29–33

Uematsu S, et al (2022) Multi-omics-based label-free metabolic flux inference reveals obesity-associated dysregulatory mechanisms in liver glucose metabolism. *iScience* 25: 103787

Usui Y, Hirasawa T, Furusawa C, Shirai T, Yamamoto N, Mori H, Shimizu H (2012) Investigating the effects of perturbations to pgi and eno gene expression on central carbon metabolism in Escherichia coli using 13 C metabolic flux analysis. *Microb Cell Fact* 11: 87–87

van Klinken JB, Willems van Dijk K (2016) FluxModeCalculator: an efficient tool for large-scale flux mode computation. *Bioinformatics* 32: 1265–1266

Vander Heiden MG, Cantley LC, Thompson CB (2009) Understanding the Warburg Effect: the metabolic requirements of cell proliferation. *Science* 324: 1029–1033

Wagner A, Fell DA (2001) The small world inside large metabolic networks. *Proc Biol Sci* 268: 1803–1810

Wang H, et al (2021) Genome-scale metabolic network reconstruction of model animals as a platform for translational research. *Proc Natl Acad Sci USA* 118: e2102344118

Wang L, et al (2022a) Spatially resolved isotope tracing reveals tissue metabolic activity. *Nat Methods* 19: 223–230

Wang R, et al (2022b) Global stable-isotope tracing metabolomics reveals system-wide metabolic alternations in aging Drosophila. *Nat Commun* 13: 3518

Weitzel M, Wiechert W, Nöh K (2007) The topology of metabolic isotope labeling networks. *BMC Bioinformatics* 8: 315–315

Wiechert W, Möllney M, Isermann N, Wurzel M, de Graaf AA (1999) Bidirectional reaction

steps in metabolic networks: III. Explicit solution and analysis of isotopomer labeling systems. *Biotechnol Bioeng* 66: 69–85

Wishart DS, et al (2022) HMDB 5.0: the Human Metabolome Database for 2022. *Nucleic Acids Res* 50: D622–D631

Wu C, Herold RA, Knoshaug EP, Wang B, Xiong W, Laurens LML (2019) Fluxomic analysis reveals central carbon metabolism adaptation for diazotroph Azotobacter vinelandii ammonium excretion. *Sci Rep* 9: 13209

Ye Y, Yu B, Wang H, Yi F (2023) Glutamine metabolic reprogramming in hepatocellular carcinoma. *Front Mol Biosci* 10: 1242059

Yoo HC, Yu YC, Sung Y, Han JM (2020) Glutamine reliance in cell metabolism. *Exp Mol Med* 52: 1496–1516

Yu JSL, et al (2022) Microbial communities form rich extracellular metabolomes that foster metabolic interactions and promote drug tolerance. *Nat Microbiol* 7: 542–555

Zamboni N, Fendt SM, Rühl M, Sauer U (2009) 13C-based metabolic flux analysis. *Nat Protoc* 4: 878–892

Zamboni N, Saghatelian A, Patti G (2015) Defining the metabolome: size, flux, and regulation. *Mol Cell* 58: 699–706

Zampieri M, Hörl M, Hotz F, Müller NF, Sauer U (2019) Regulatory mechanisms underlying coordination of amino acid and glucose catabolism in Escherichia coli. *Nat Commun* 10: 3354

Zanghellini J, Ruckerbauer DE, Hanscho M, Jungreuthmayer C (2013) Elementary flux modes in a nutshell: properties, calculation and applications. *Biotechnol J* 8: 1009–1016

Table 1: Summary statistics for the five metabolic networks in this study.

	Carbon metabolism				
GEM (# mets | # rxns)	Sources	Sinks	States	Transitions	AEFMs
E. coli core (71 | 144)	184	255	14659	24355	6519
iAB_RBC_283 (274 | 465)	954	1166	37122	51220	7958
iIT341 (433 | 759)	1486	2134	86342	120545	30633
iSB619 (547 | 974)	2188	2986	169877	246712	59444
HepG2 (435 | 545)	376	939	14159860	18152623	2180613
	Nitrogen metabolism				
GEM (# mets | # rxns)	Sources	Sinks	States	Transitions	AEFMs
E. coli core (71 | 144)	30	40	246	448	204
iAB_RBC_283 (274 | 465)	161	214	6409	9275	2091
iIT341 (433 | 759)	314	447	27440	39761	10440
iSB619 (547 | 974)	353	516	36661	54165	14214
HepG2 (435 | 545)	72	190	19137	27860	5105

Table 2: Number of metabolites and reactions removed from each network during preprocessing.

	E. coli core	iAB_RBC_283	iIT341	iSB619	HepG2
Rxns with non-integer stoichiometries	2	1	3	34	8
Pseudometabolites with no known structures	1	68	52	108	33
Rxns with pseudometabolites	2	142	93	204	46
Rxns exceeding RXNMapper token limit	0	1	4	14	3

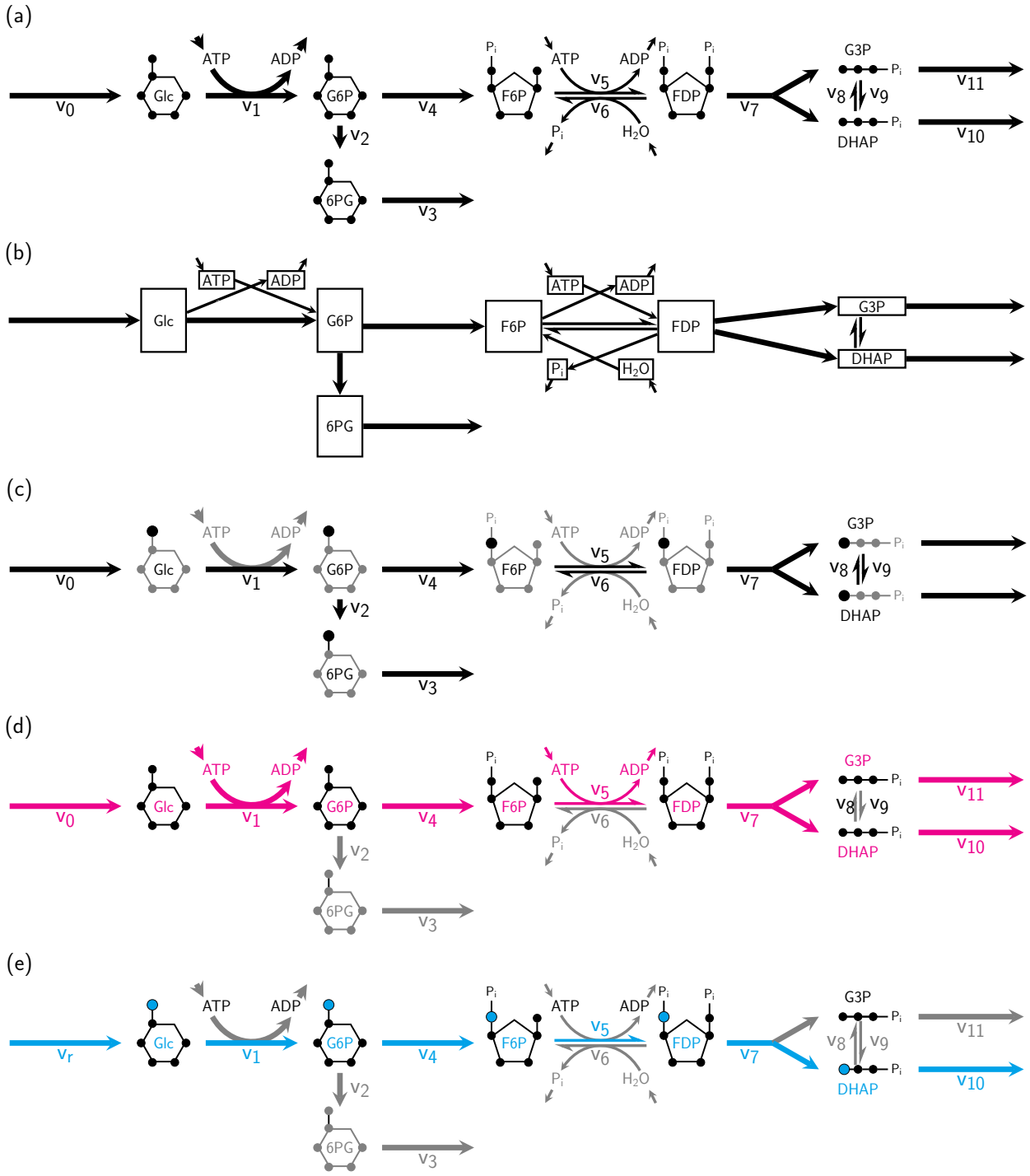

Figure 1: Various notions of metabolic networks with respect to an (a) example metabolic flux network, (b) metabolic graph, and (c) atomic transition/flux graph. A representative elementary flux mode is shown for the (d) metabolic flux network and (e) atomic transition/flux graph.

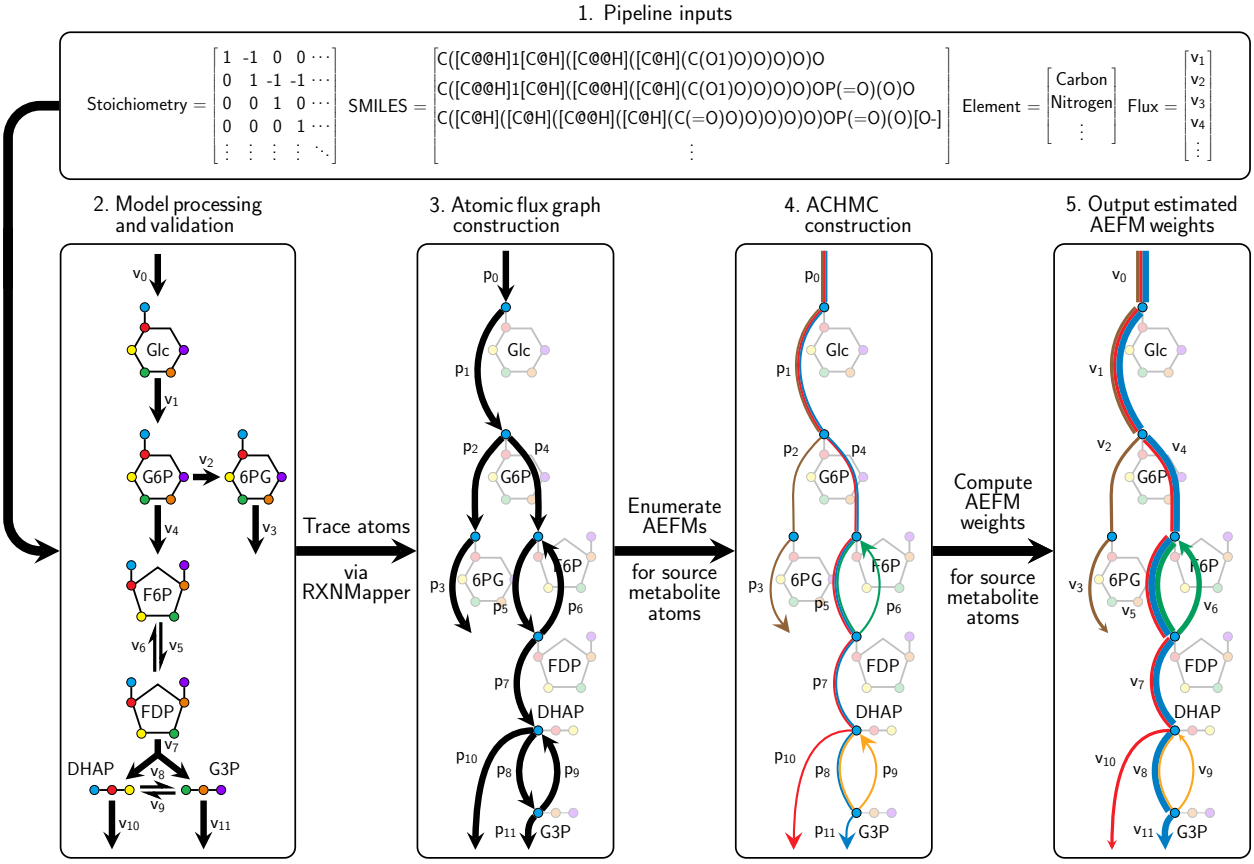

Figure 2: Atomic cycle-history Markov chain (ACHMC) pipeline. (a) An example MEFM in glycolysis. (b) An example AEFM tracing the flow of a given glucose carbon in glycolysis. (c) The major steps within our pipeline to enumerate AEFMs and compute their weights.

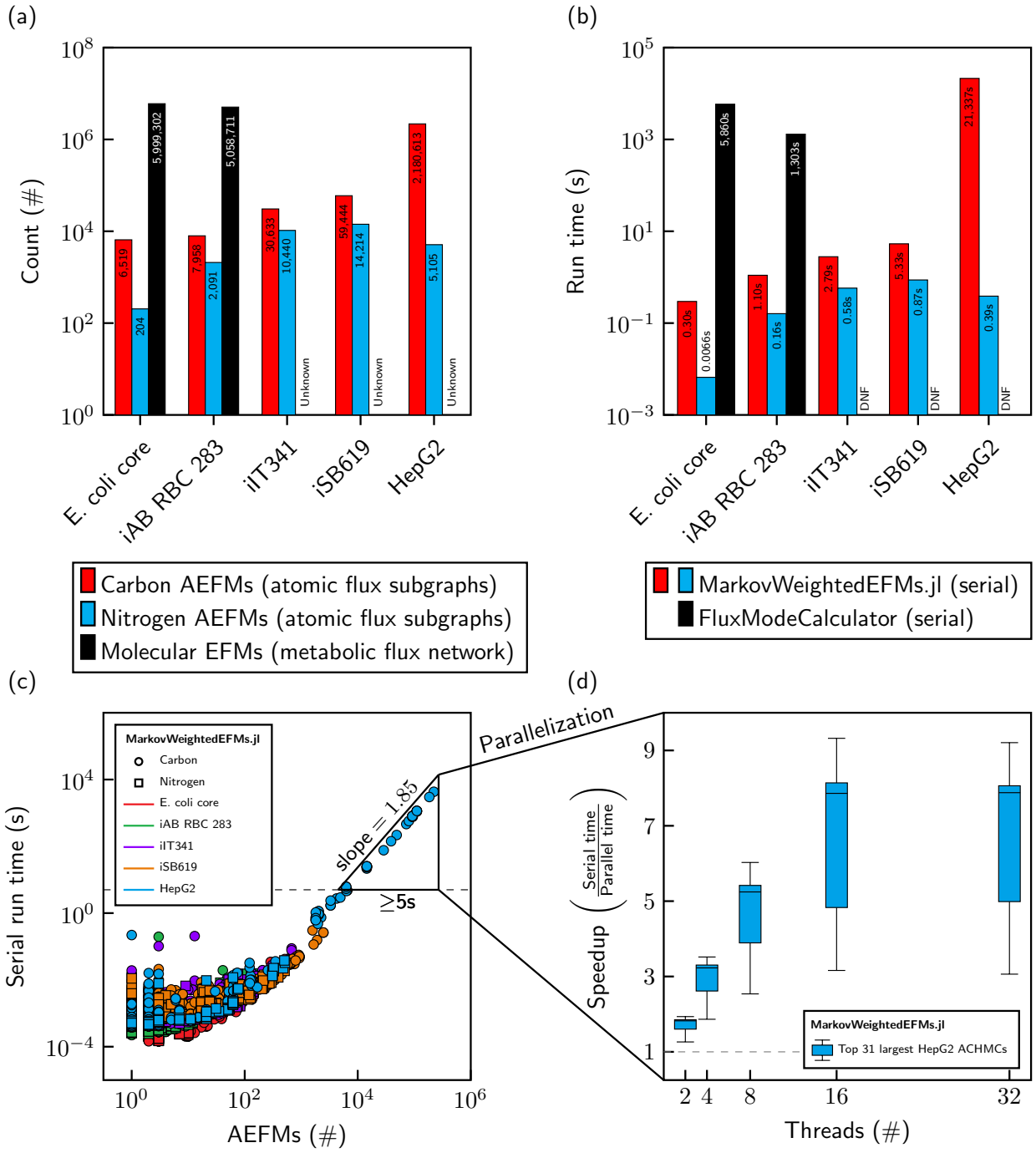

Figure 3: AEFM enumeration is computationally tractable compared to MEFMs in five GEMs. (a) Number of atomic and MEFMs in the five GEMs. (b) The run time of our MarkovWeightedEFMs.jl method versus FluxModeCalculator running in serial. (c) Serial run time scaling of MarkovWeightedEFMs.jl as a function of the number of AEFMs. (d) Speedup of selected ACHMCs as a function of additional threads.

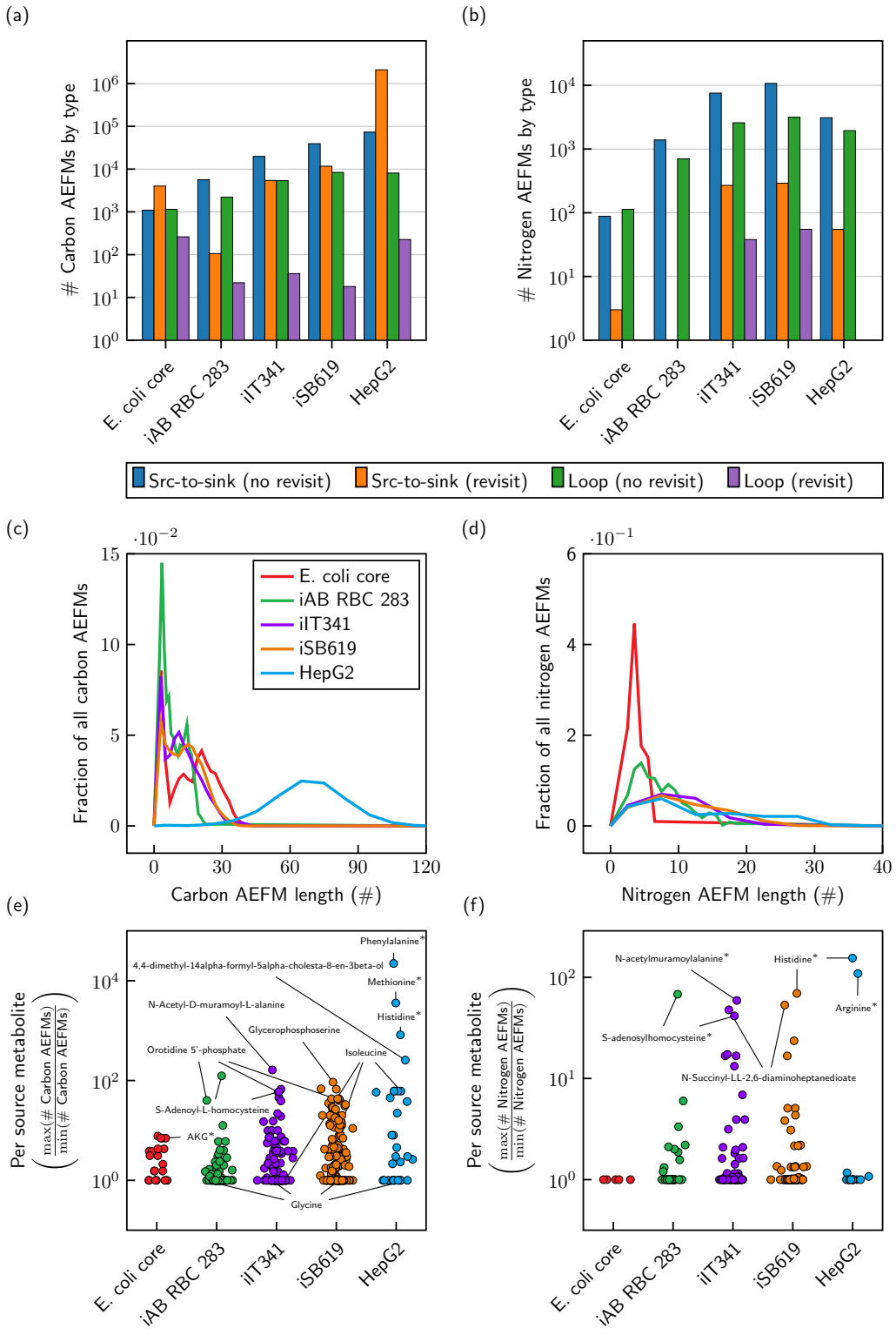

Figure 4: Structural analysis of AEFMs in five genome-scale metabolic models. (a-b) Classes of carbon and nitrogen EFMs. (c-d) Fraction of carbon and nitrogen AEFM lengths. (e-f) Ratio of the greatest and smallest number of AEFMs between carbons and nitrogens within the same source metabolite. Representative metabolites from each dataset are labelled; labels with asterisks indicate that metabolite is also present in other networks.

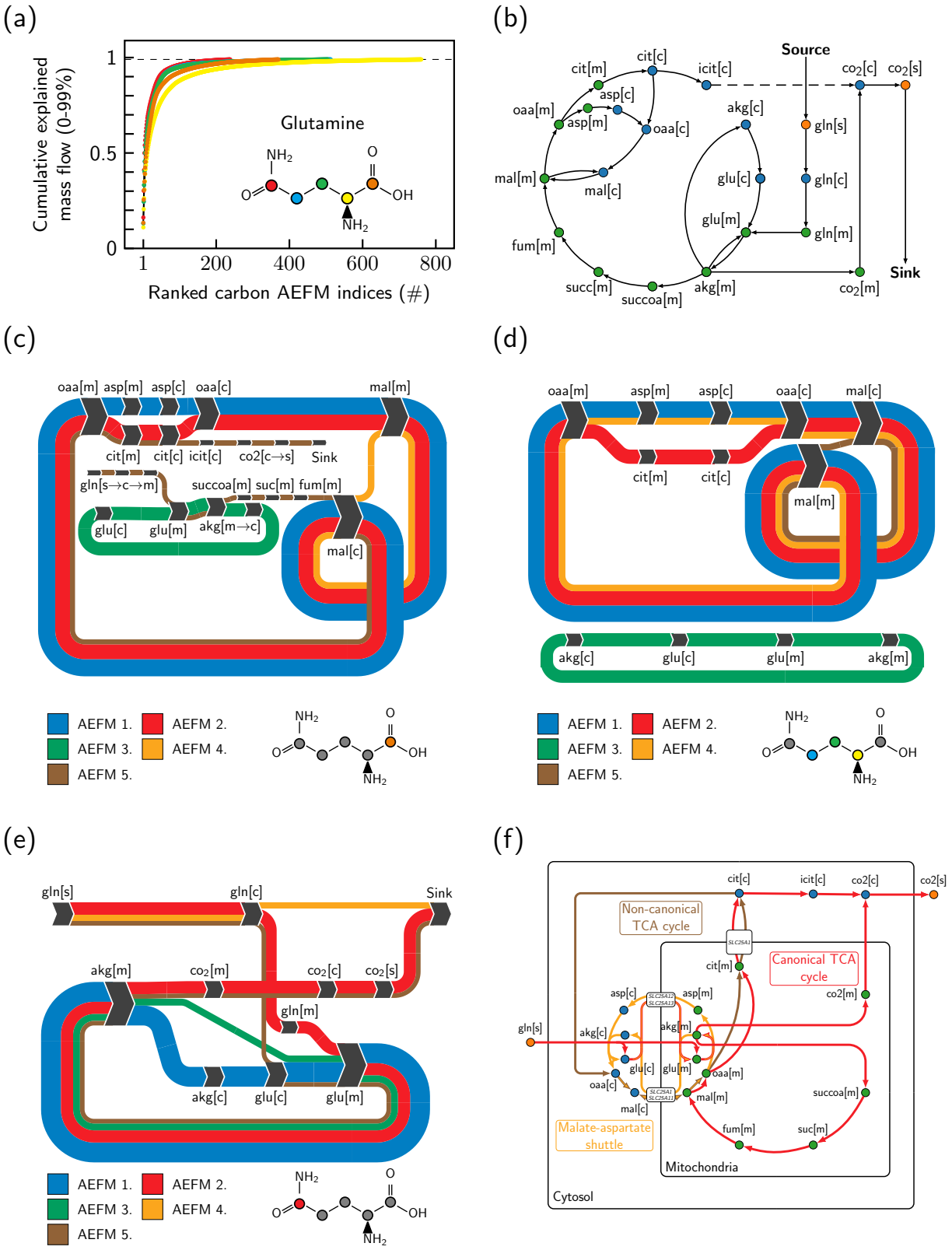

Figure 5: Carbon AEFM weight analysis of the HepG2 metabolic flux network. (a) A small number of highly active AEFMs explain the majority of glutamine carbon flow. (b) Subnetwork of the top five AEFMs across each glutamine carbon collapsed onto metabolites. (c-e) Sankey diagrams of the top five glutamine carbon AEFMs. (f) Schematic mapping AEFMs onto traditionally defined metabolic pathways/subsystems. All metabolite names are labelled following the BiGG database nomenclature.

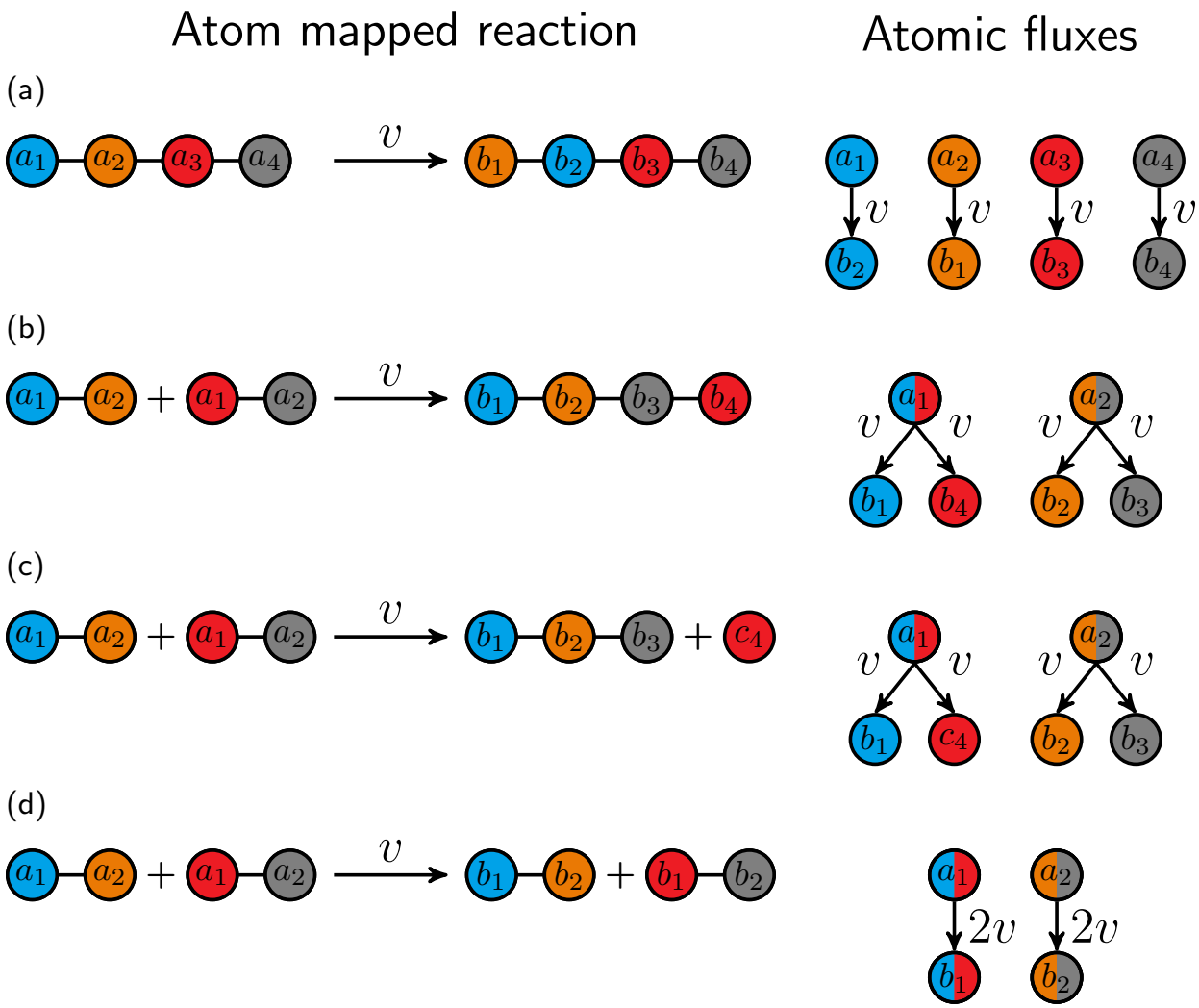

Figure S1: Rules for assigning atomic fluxes from atom-mapped reactions with biological examples. Schematic node colours represent ground truth atom mappings across substrate(s) and product(s). Node labels correspond to distinct atomic indices of substrate and product stoichiometric copies. (a) For reactions with single stoichiometric copies of substrates and products, each atom within a given substrate moves to a single atomic position within a product with atomic flux equal to the reaction flux. (b-d) For reactions with s stoichiometric copies of a given substrate, there are s copies of each metabolite-atom state on the substrate and product side of the reaction. The probability of any atom within a substrate stoichiometric copy moving to a product metabolite-atom state remains equal to the reaction flux. (b) The stoichiometric copies of the substrate fuse together into a single product. (c) The stoichiometric copies of the substrate form distinct products. (d) The s stoichiometric copies of the substrate form s copies of products with identical atomic backbones.

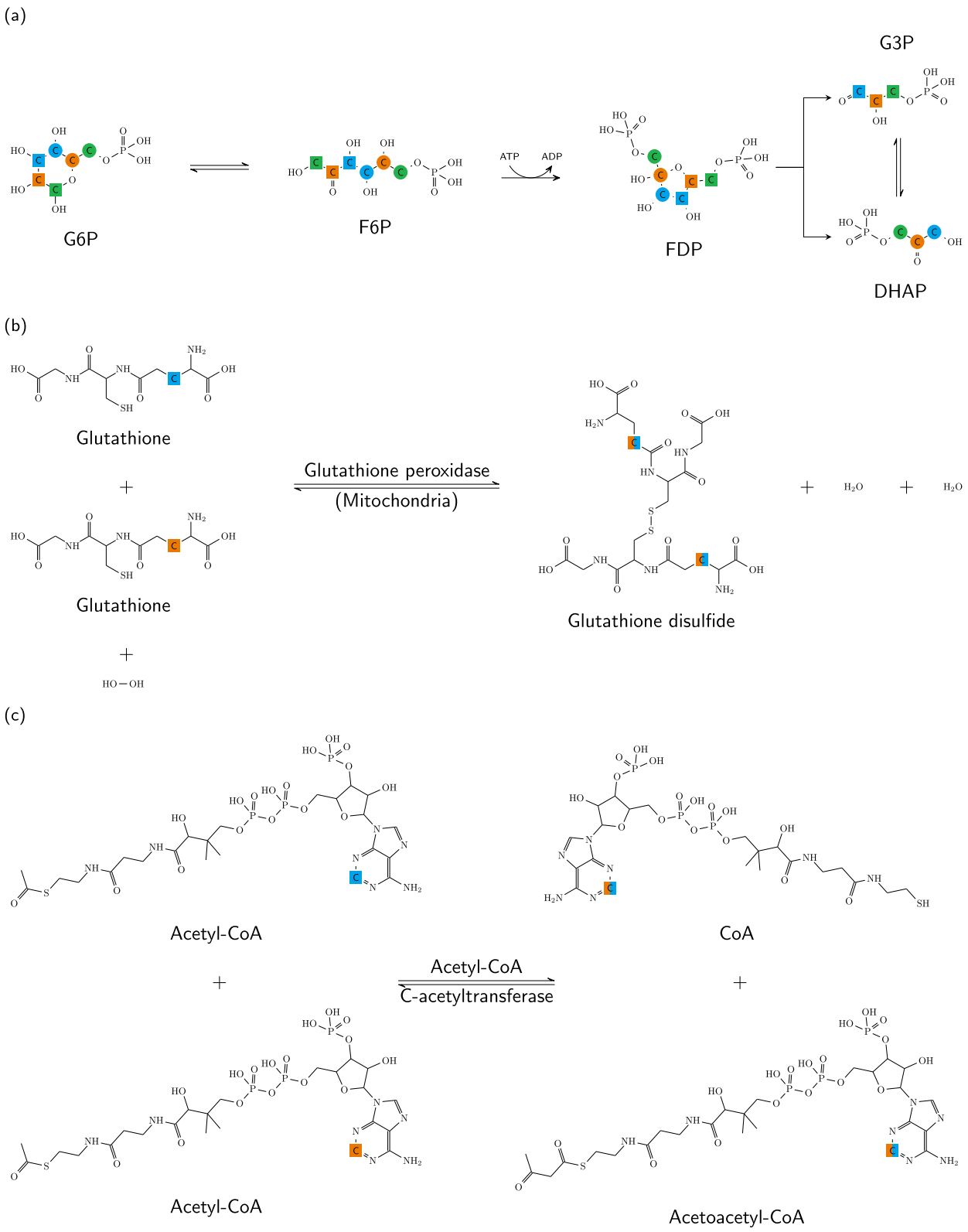

Figure S2: Biological examples for rules in Figure S1. (a) Biological example of rule a where the atoms in each substrate map to a single position on the corresponding product. (b) Biological example of rule b where two stoichiometric copies of glutathione fuse together to form a single stoichiometric copy of glutathione disulfide. (c) Biological example of rule c where two stoichiometric copies of acetyl-CoA undergo a reaction to produce a stoichiometric copy of two distinct products.

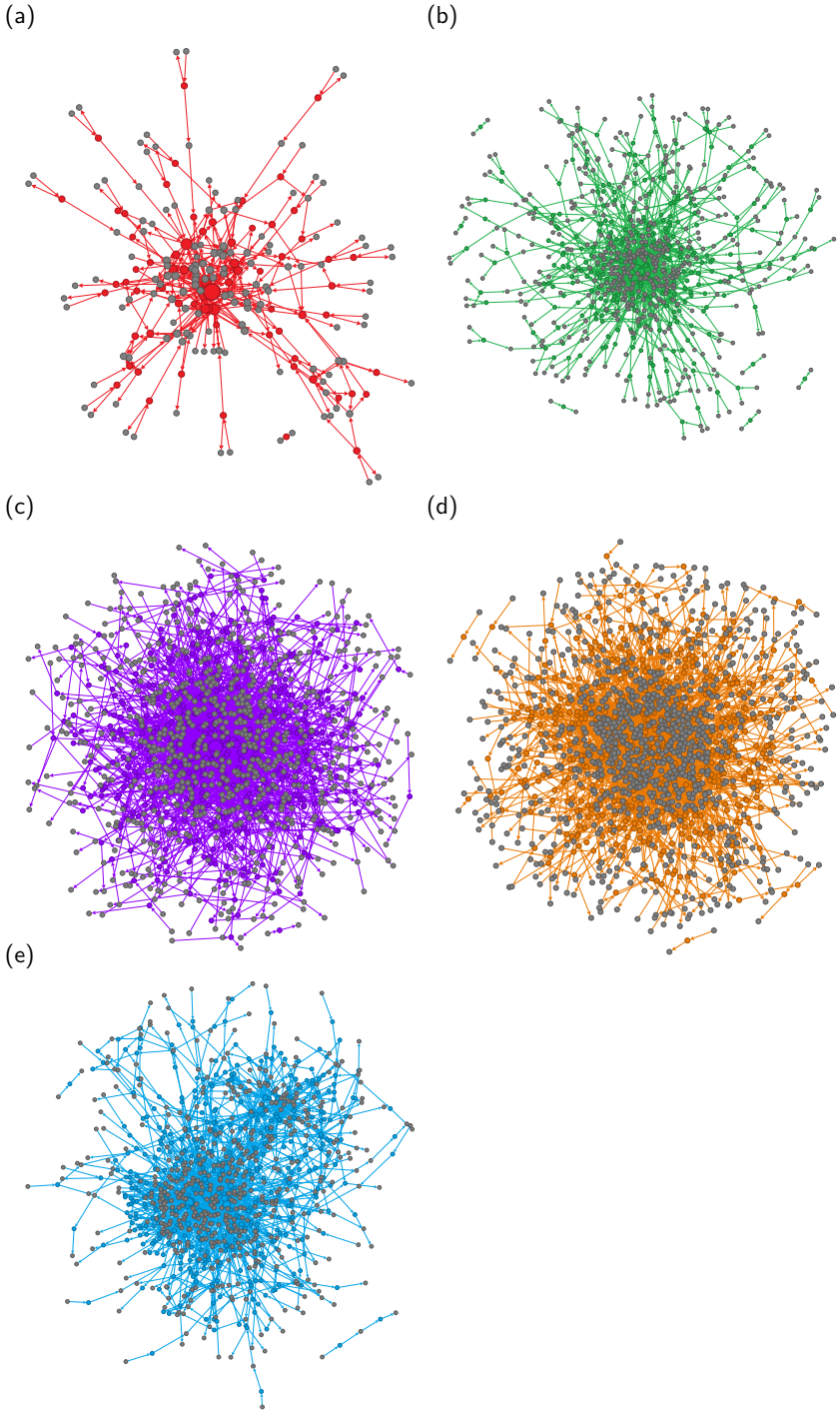

Figure S3: Network visualisation of the five GEMs after pre-processing. Metabolites (non-grey nodes) are connected to reaction entities (grey nodes) with node sizes proportional to their degree. Graphs were constructed in Gephi version 0.10 using the Yifan-Hu proportional network layout with default parameters. (a) E. coli core. (b) iAB RBC 283. (c) iIT341. (d) iSB619. (e) HepG2.

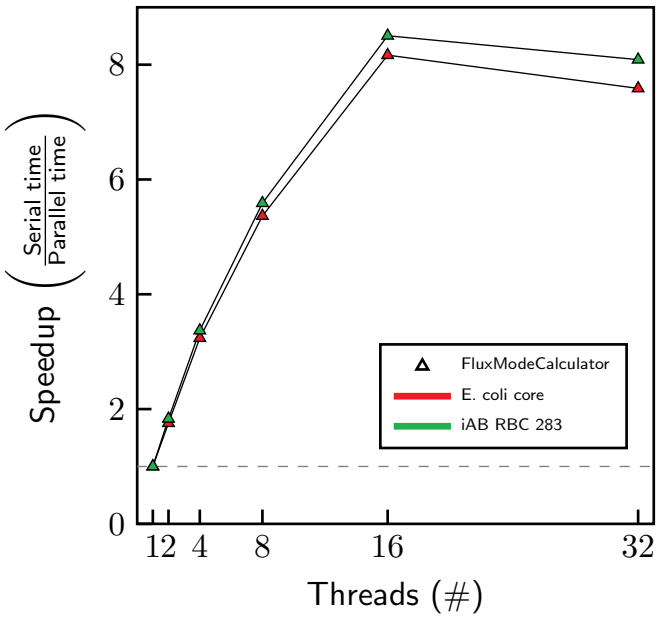

Figure S4: FluxModeCalculator scaling across multiple threads.

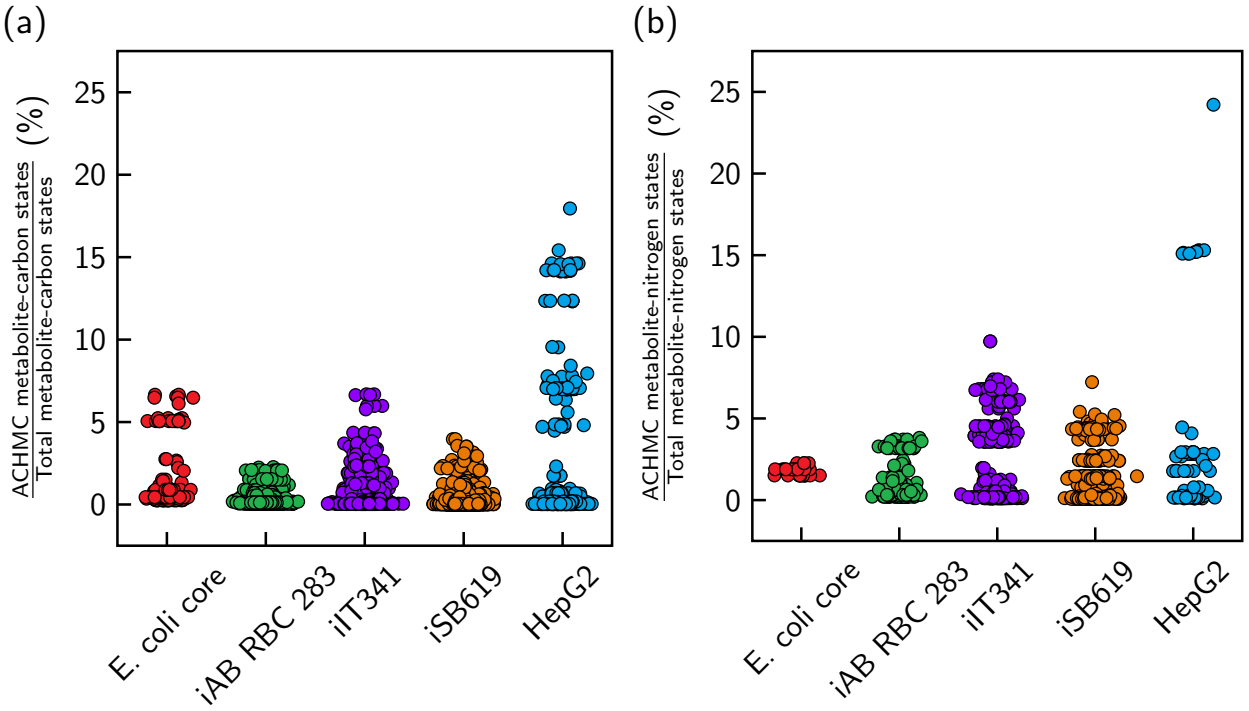

Figure S5: Most ACHMCs traverse less than 10% of the total metabolite-carbon/nitrogen state space. Each point corresponds to an ACHMC rooted on a given source metabolite carbon or nitrogen.

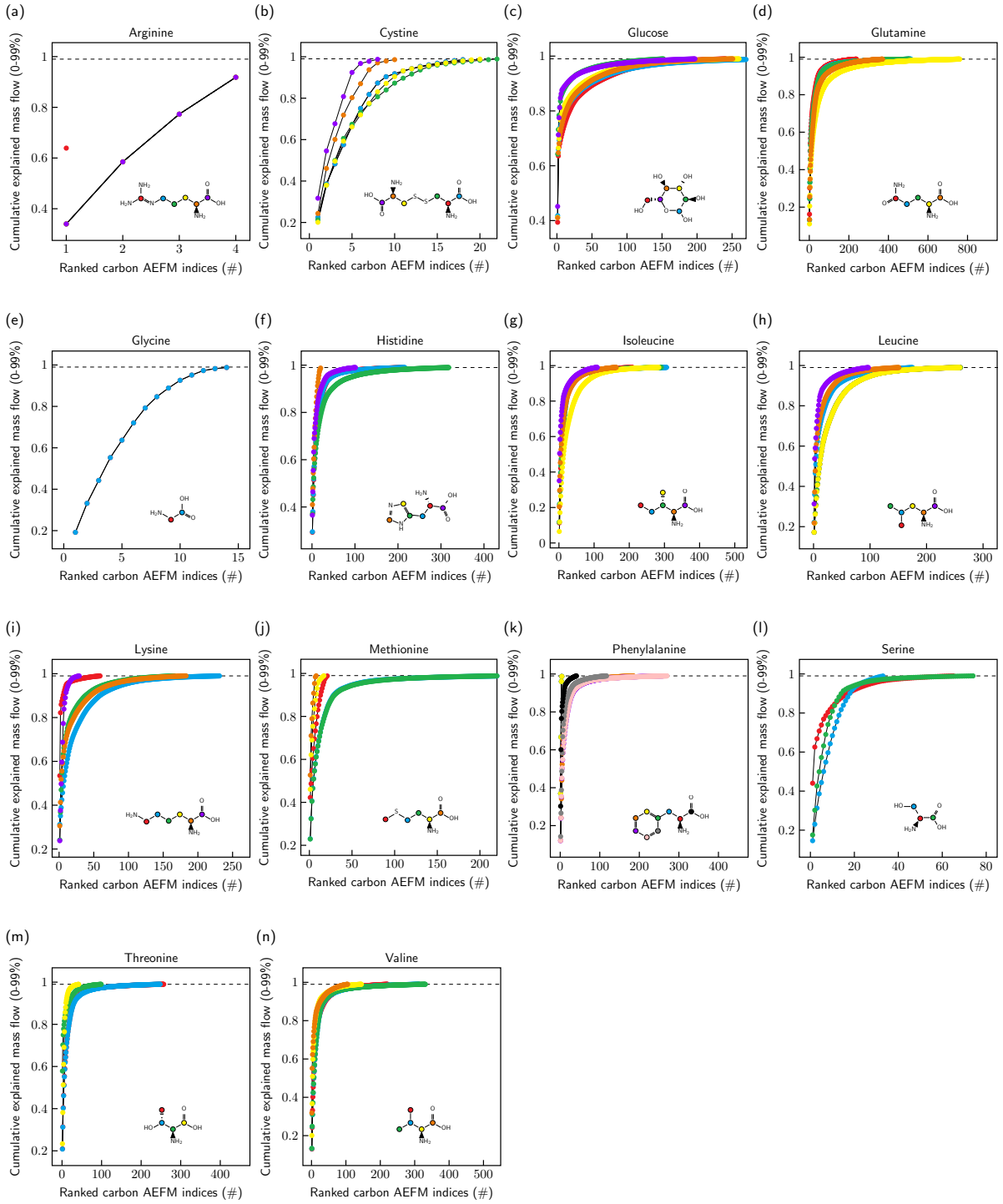

Figure S6: Cumulative explained carbon mass flow of input glucose and amino acid carbons from the HepG2 flux network. The cumulative explained mass flow is truncated at 99% to avoid displaying AEFMs that carry little atomic mass flow.

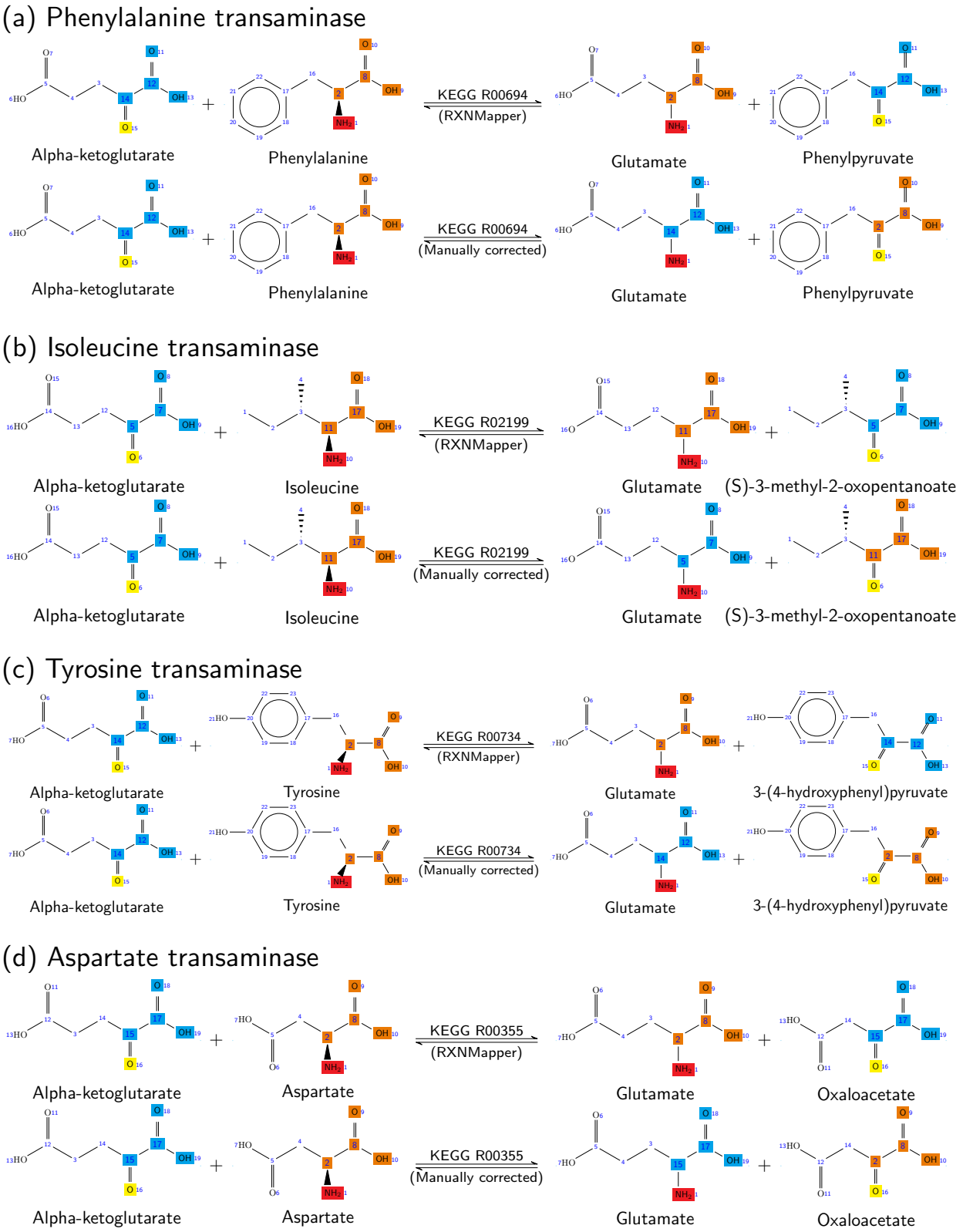

Figure S7: Examples of incorrectly atom-mapped transaminase reactions present in one or more of the five networks. (a) Phenylalanine transaminase. (b) Isoleucine transaminase. (c) Tyrosine transaminase. (d) Aspartate transaminase.